1/10TH 2WD Electric Power R/C Off-Road Truck

Specifications:

LENGTH	WIDTH	HEIGHT	WHEEL BASE	DRIVE SYSTEM	GROUND CLEARANCE	DIAMETER OF WHEEL	WIDTH OF WHEEL	GEAR RATIO
480mm	330mm	180mm	282mm	2WD Shaft Drive	46mm	135mm	70mm	1:11.7

Spare Part

60156-Chassis Dustproof Cover(PVC)	60202-Chassis	60203-Front Lower Suspension Arm	60204-Rear Lower Suspension Arm	60205-Front Chassis Plate
60249-Rear Chassis Plate	60206-Front Shock Tower	60207-Rear Shock Tower	60208-Steering Hub (L/R)	60209-Front Hub Carrier (L/R)
60210-Rear Upright	60211-Front Bulk Head Brace	60212-Front Shock Mount	60213-Front Upper Link 58.5mm	60214-Steering Link 55mm
60215-Rear Upper Link 73mm	60216-Servo Link 30.5mm	60217-Gear Box	60219-Main Gear Cover	60224-Front Shock Absorber
60259-Rear Shock Absorber	60225-Rear Arm Bulkhead	60226-Front Arm Bulkhead	60150-Front Bumper	60228-Steering Sway Arm Assembly

Spare Part

03013-Radio Tray Mount A	60301-Body Post	60302-Post Mount	60151-Motor Guard	60152-Wheelie Wheel
60153-Motor Guard With Wheelie Wheel	90815-Wheel Rim	90816-Tyre+Inesrt Sponge	90817-Wheel Complete	60201-Battery Strap
60220-Differential Case(48P)	60221-Gear (34T-48P)	60222-Gear (81T-48P)	60229-Gear(20T-48P)	60251-Motor Gear (23T)48P
14534-Diff Planetary Gear (2P 4P 2P 4P)	14536-Differential Outdrive	60230-Slipper Shaft	60154-Slide Wheel Axle	60236-Rear Wheel Axle
60241-Front Wheel Axle	60231-Slipper Pad	60232-Slipper Hub	60233-Slipper Tensioner Spring	60234-Motor Mount
60239-Servo Saver Assembly	60237-Dogbone	60238-Front/Rear Suspension Pin	14535-Diff Shaft	60254-Pin 3*26

Diff.Gear Assembly

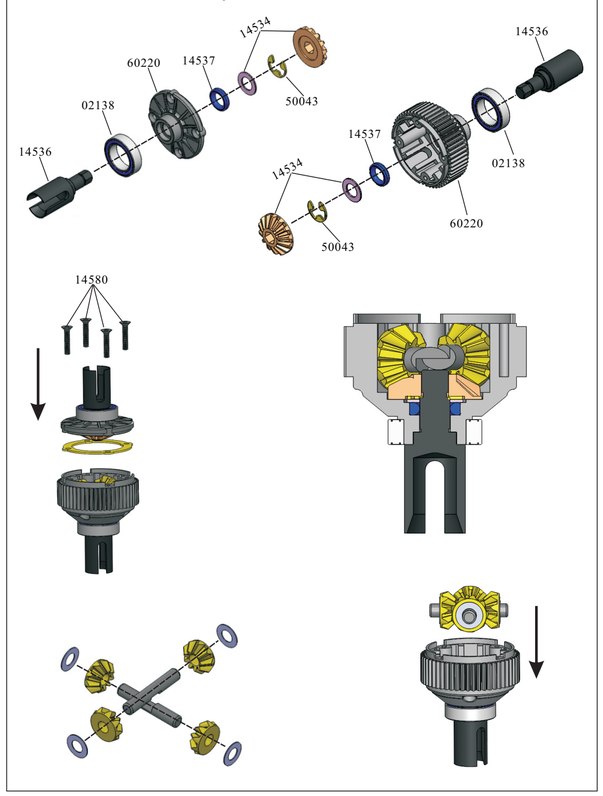

Diff.Gear/Motor Assembly

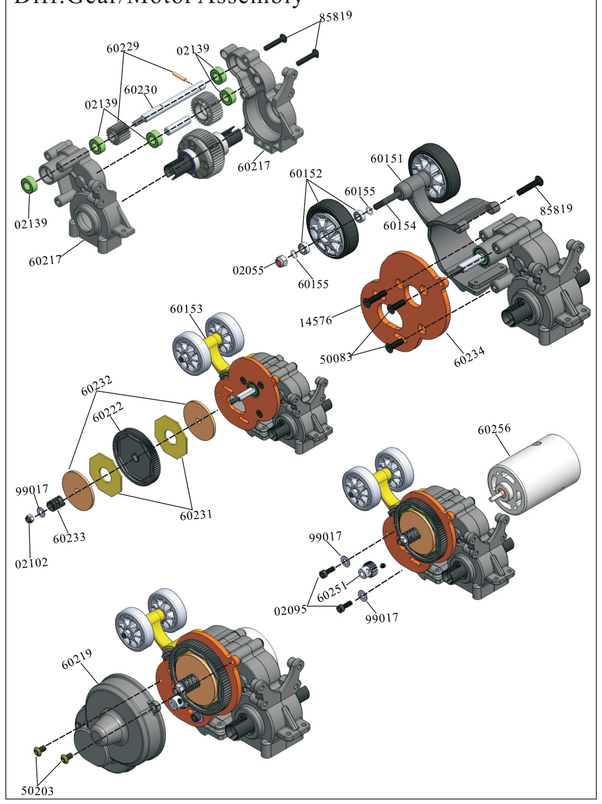

Spare Part

60255-Pin 5*18	08027-Pin 2*10	02100-Wheel Hex.	02138-Ball Bearing Ø15*Ø10*4	02139-Ball Bearing Ø10*Ø5*4
02080-Oil Bearing Ø5*Ø10*4	99017-Washer 8*3*0.5	60155-Washer 6*4*0.5	14537-Diff O-Ring	60242-Steering Shaft Bush
06007-Shock Ball Head C	50043-Sus. Arm E- Clips Ø4*0.6mm	02053-R- Clip	02102-Nuts(M3)	02055-Nuts(M4)
60240-Ball Head Screws 5.8mm	86081-M3*3 Grub Hex. Screws	60252-Front Lower Suspension Arm Screws 3*25mm	60253-Rear Lower Suspension Arm Screws 3*29mm	14576-Flat Head Hex Machine Screw M3*14
14577-Flat Head Hex Machine Screw M3*12	14579-Flat Head Hex Machine Screw 3*8	14580-Flat Head Hex Machine Screw 2*10	50083-Flat Head Hex Mechnical Screw 3*10	85819-Cap Head Hex. Mechnical Screw 3*16
85818-Cap Head Hex. Mechnical Screw 3*14	50101-Cap Head Hex. Mechnical Screw(3*12)	50100-Cap Head Hex. Mechnical Screw(3*10)	50203-Cap Head Hex. Mechnical Screw(3*5)	02095-M3*8 Column Head Hex. Screw

Optional Spare Part

11214-Wheel Rim	11213-Tyre	11215-Wheel Complete	60257-Powder Steel Gear(20T-48P)	60256-Motor Rc550 (8514)
03200-Battery Ni-MH (7.2V 2000mAh)	60258-2 IN 1 ESC/RX	Sp6009-Servo(6KG)		

Brushless Off-Road Truck-Spare Parts

06002-Shock Absorber	03302-Brushless Motor KV:3300	03205-LiPO Battery 7.4V 3500mAh	37025-Brushless Electronic Speed 50A	Sp6001-Servo(6KG)

Rear End Installation

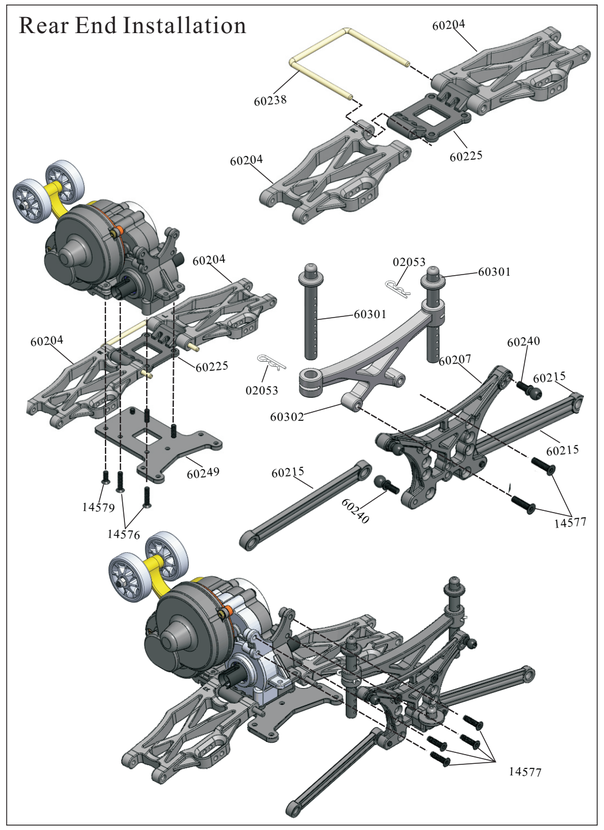

Rear End Installation

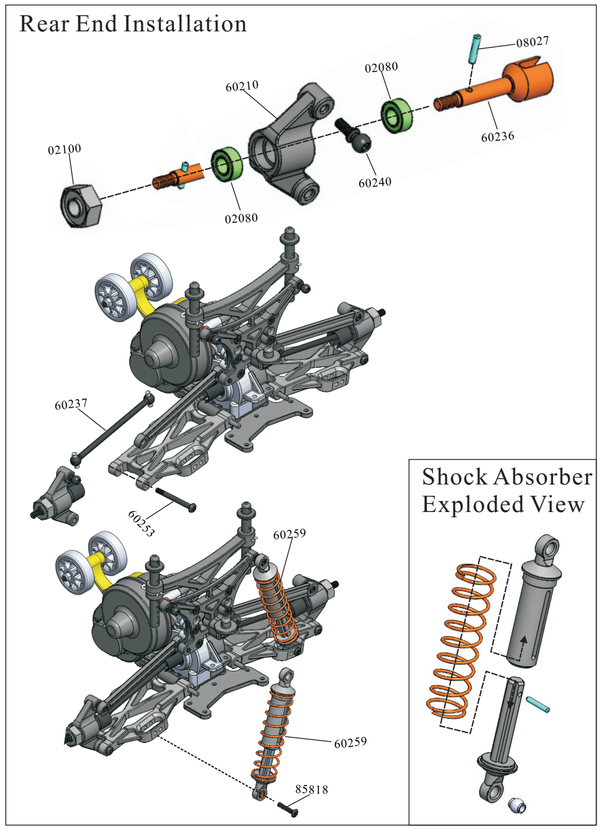

Shock Absorber Exploded View

Front End Installation

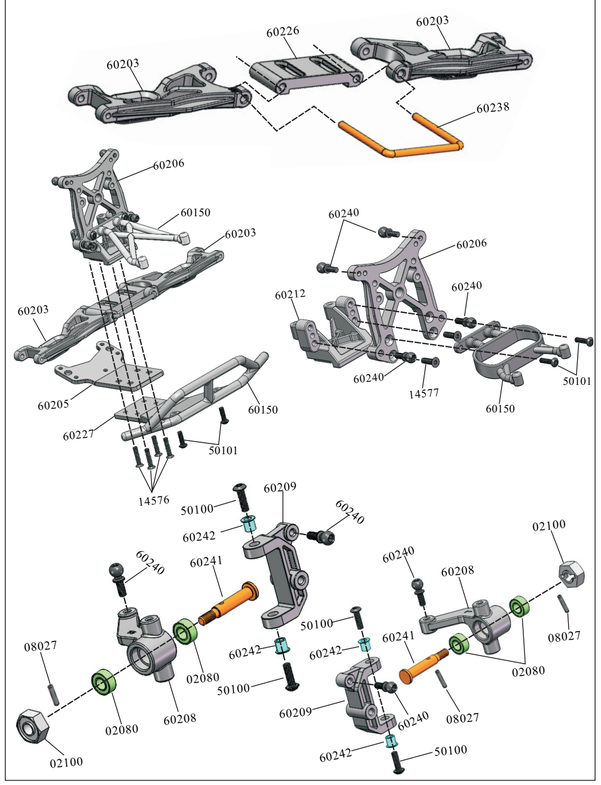

Front End Installation

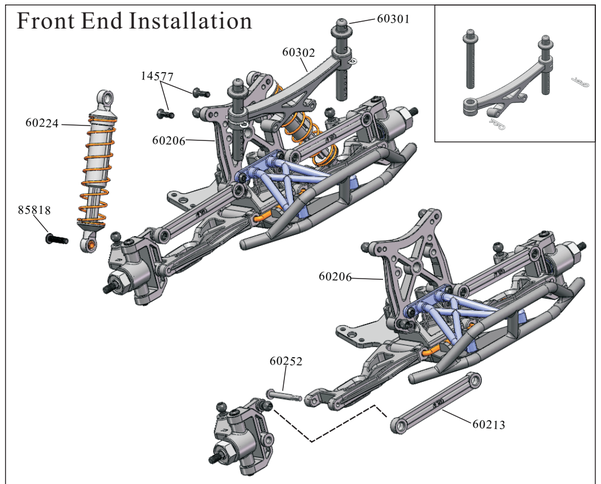

Steering Sway Arm Assembly

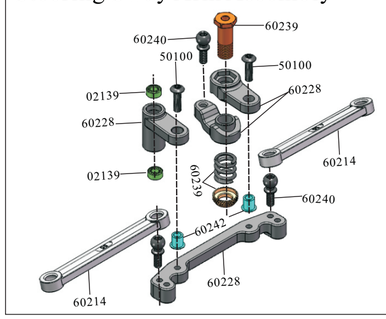

Front End Installation

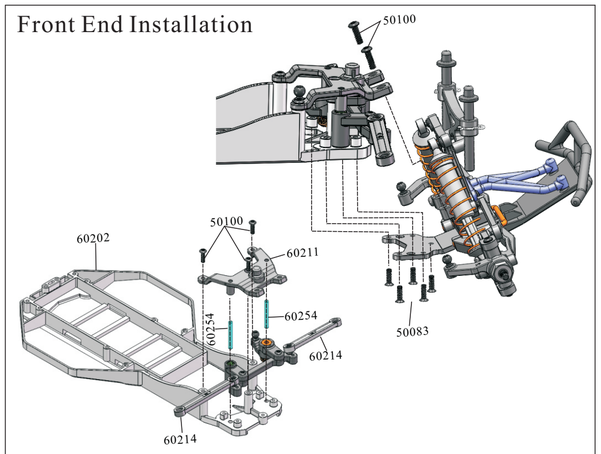

Servo Installation

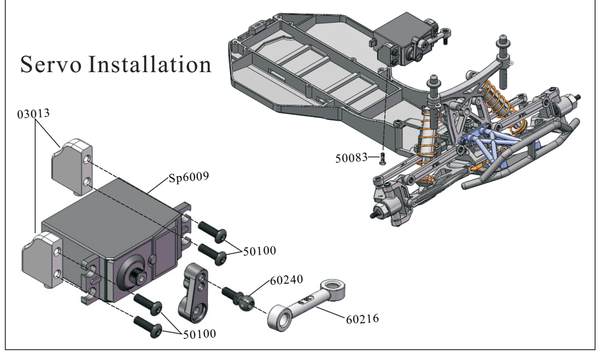

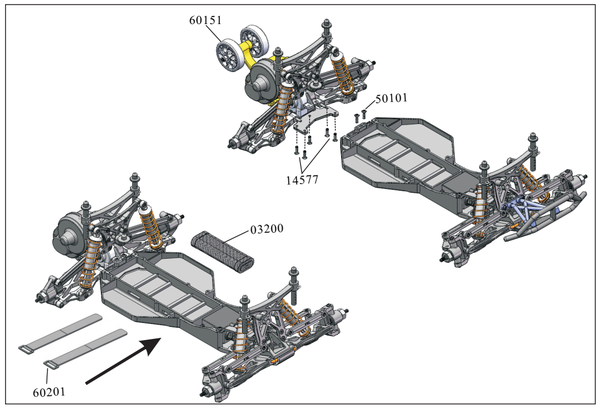

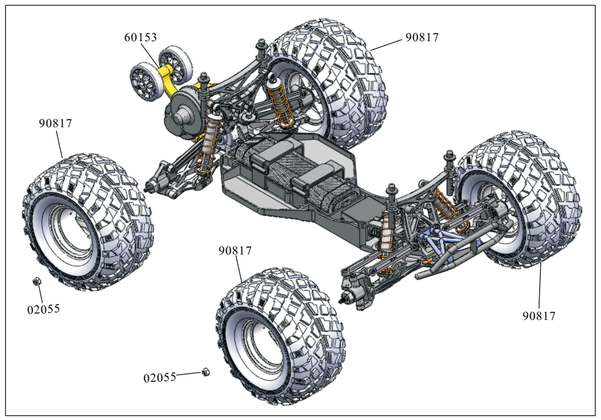

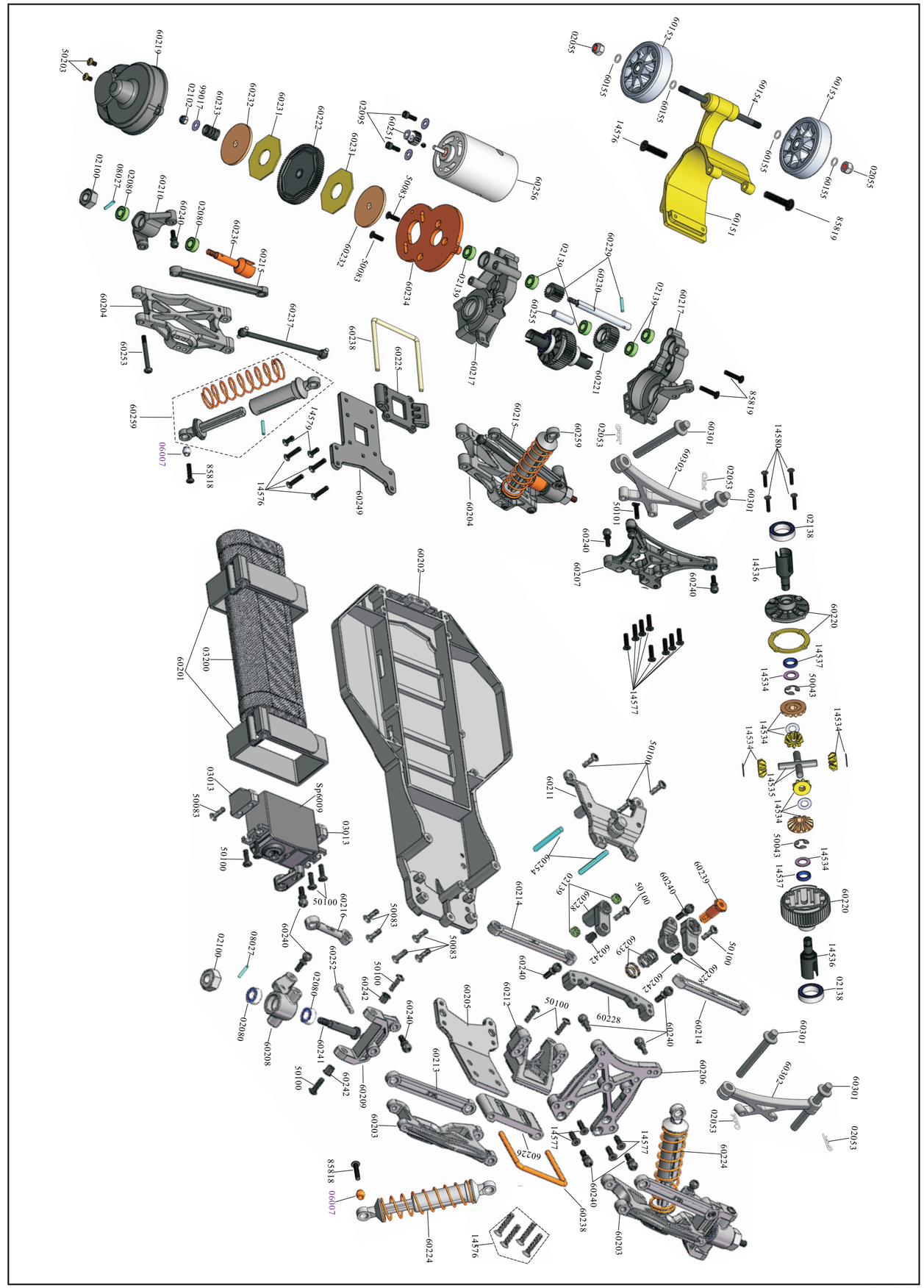

601160527