INSTRUCTION MANUAL

“TRANSLATION OF THE ORIGINAL INSTRUCTIONS”

This manual is to be kept for future reference and must always accompany the machine.

TYPE

T-03

MODEL

T 45C - TW 45C

TOUPIE

SPINDLE MOULDER FOR WORKING WITH WOOD AND MATERIAL WITH SIMILAR PHYSICAL CHARACTERISTICS



Read this manual in its entirety before using the machine for the first time. Failure to follow the instructions given in this manual can lead to death or serious injury.

- Ed. 10-2025 / Rev. 0.0 EC 00L0369131D EN-GB

THIS MANUAL IS THE PROPERTY OF SCM GROUP S.P.A. - ANY REPRODUCTION, EVEN PARTIAL, IS PROHIBITED

Manufacturer	SCM Industria SpA
Address	Via Valdicella, 7 - 47892 Gualdicciolo (RSM) - San Marino
Importer	
Importer's address	
Name	TOUPIE
Name	SPINDLE MOULDER FOR WORKING WITH WOOD AND MATERIAL WITH SIMILAR PHYSICAL CHARACTERISTICS
Brand	SCM
Year of manufacture	
Serial number	
Client:	
Type	T-03
Model	T 45C - TW 45C
Composition	
Work order	
Type of document	Instruction manual
Document code	00L0369131D
Edition	Ed. 10-2025 / Rev. 0.0
Compliance	CE

Contents

1 Warnings 7

2 General and safety information 9

2.1 Importance of the instruction manual 10

2.2 Machine identification 11

2.3 Documentation supplied with the machine 12

2.4 Technical support 13

2.5 Consultation notes - Abbreviations - Acronyms - Glossary 14

2.6 Symbols in the instruction manual 16

2.7 Plates on the machine 18

2.8 DESCRIPTION OF THE MACHINE 22

2.9 Conditions foreseen for the use 24

2.10 Tools that can be used 25

2.11 Environmental conditions 26

2.12 Incorrect use that can be reasonably expected 27

2.13 RESIDUAL RISKS 28

2.14 Personnel training 29

2.15 Safety warnings 30

2.15.1 Personal safety 30

2.15.2 Security in the machine 31

2.15.3 Tools safety 32

2.15.4 Working area safety 32

2.15.5 Safety during maintenance 33

2.15.6 Safe working practise 34

2.16 Emergency conditions 36

2.17 REMOVAL - STORAGE - SCRAPPING 37

2.17.1 Dismantling the device 37

3 Safety and emergency stop devices 39

3.1 Arrangement and description of emergency devices 40

3.2 Arrangement and description of safety devices 42

4 Technical specifications 45

4.1 Dimensions of workpiece to be thicknessed 46

4.2 Technical data 48

4.3 Standard accessories 50

4.4 Optional accessories 51

4.5 Noise levels 52

4.6 Dust emission 53

4.7 Encumbrance dimensions 54

4.8 Work area 56

5 Installation 59

5.1 Unloading the machine 60

5.2 Positioning 62

5.3 Fitting parts removed for transport requirements 64

5.3.1 Fitting the supporting frame (OPT) 64
5.3.2 Fitting the rest rule 68
5.3.3 Device for angled cuts installation 69
5.3.4 Fitting the additional tables (OPT) 70
5.3.5 Fitting the additional tenoning table 71
5.3.6 Fitting the front rear rod (OPT) 72
5.3.7 Fitting guards 74
5.3.8 Fitting spindle 78
5.4 Tool fitting - SAFETY NOTES 80
5.4.1 Tool fitting 82
5.5 Electrical installation 84
5.5.1 Requisites for the electricity supply system 84
5.5.2 Electrical power and earth connection 88
5.5.3 Checking the connection is correct 88
5.6 Connection to the suction system 90
6 Commands 93
6.1 Control board 94
6.2 Emergency buttons 95
6.3 Access to the electric housing 97
6.4 general controls before machine starting 99
6.4.1 Profiling operations 100
6.4.2 Milling at the spindle (shaping) 100
6.4.3 Tenoning operations (OPT) 100
6.5 Machine start-up - shutdown 102
6.5.1 Machine with COUNTERCLOCKWISE SPINDLE ROTATION (against feed direction) 105
6.5.2 Machine with CLOCKWISE rotation (feed direction) 105
7 Using and adjusting the spindle 107
7.1 Adjustments 108
7.1.1 Spindle height adjusting 108
7.1.2 Spindle tilting (OPT) 110
7.2 Spindle speed selection 112
7.2.1 Speed change 113
7.3 Aluminium sliding table (OPT) 116
7.3.1 Using the telescopic rule (OPT) 118
7.3.2 Use of the presser unit (OPT) 119
7.3.3 Additional rule for oblique cuts with millimeter rule 120
7.4 Telescopic rule on the small table to tighten (OPT) 122
7.4.1 Rule rotation 122
7.4.2 To move the rule close to the tools 122
7.5 Use of the tenoning table (OPT) 124
7.5.1 Execution of straight tenons 126
7.5.2 Oblique tenons 128
7.6 Adjustable Hood-Fence unit 130
7.6.1 Use of hood-fence for small pieces 132
7.6.2 Adjust spindle moulder hood guide for moulding without removal 134
7.6.3 Adjust spindle moulder hood guide for moulding with removal 136
7.6.4 Hood-fence adjusting for profiling with rotation direction reversal 138
7.6.5 Working examples 144
7.6.6 Hood-fence unit adjusting for working at the front end (OPT) 148
7.7 Tenoning hood (OPT) 150

7.7.1 Adjusting ... 150
7.8 Pressure unit for profiling ... 152
7.8.1 Adjusting ... 154
7.8.2 Adjusting the horizontal presser ... 156
7.9 Guard for milling at the spindle ... 158
7.9.1 Adjusting ... 158
7.9.2 Working examples ... 162
7.9.3 Maintenance ... 163

8 Wood pusher ... 165
8.1 Wood pusher ... 166

9 Maintenance ... 167
9.1 Machine Cleaning ... 168
9.2 PROGRAMMED MAINTENANCE ... 171
9.3 Lubrication ... 174
9.4 Safety devices check ... 176
9.4.1 Spare parts that affect the operator's health and safety ... 176
9.5 Replacing the belts ... 178
9.5.1 Spindle moulder ... 178
9.6 Belt stretching ... 180
9.6.1 Spindle moulder ... 180
9.7 Making the parts which get worn ... 182
9.7.1 Replacing the chip breaker ... 182
9.8 Problems - Causes - Solutions ... 183
9.9 Unscheduled maintenance ... 187

-

DICHIARAZIONE “CE” DI CONFORMITÀ

(AI SENSI DELL’ AII.IIA DELLA DIRETTIVA 2006/42/CE E DICHIARAZIONE “UE” AI SENSI DI ALTRE DIRETTIVE APPLICABILI)

EC DECLARATION OF CONFORMITY

(IN COMPLIANCE WITH ATT. IIA OF THE DIRECTIVE 2006/42/EC AND “EU” DECLARATION AND IN COMPLIANCE WITH OTHER APPLICABLE DIRECTIVES)

IL FABBRICANTE *THE MANUFACTURER*	**SCM Industria SpA** **Via Valdicella, 7 - 47892 Gualdicciolo (RSM) - San Marino**

DICHIARA CHE LA
DECLARES THAT THE

MACCHINA: *MACHINE:*	***Toupie per la lavorazione del legno e di materie con caratteristiche fisiche simili*** ***Spindle moulder for machining wood and materials with similar physical characteristics***		
MARCA: *BRAND:*	**SCM**	*N° DI SERIE* *SERIAL NUMBER*	***XXXXXX***
TIPO: *TYPE:*	**T-03**	*ANNO DI COSTRUZIONE:* *YEAR OF CONSTRUCTION:*	***XXXX***
MODELLO: *MODEL:*	**T 45C - TW 45C**		

È CONFORME A TUTTE LE DISPOSIZIONI PERTINENTI DELLE SEGUENTI DIRETTIVE:
COMPLIES WITH ALL THE RELEVANT REQUIREMENTS OF THE FOLLOWING DIRECTIVES:

2006/42/CE	***2006/42/EC***
2014/30/UE	***2014/30/EU***

ORGANISMO NOTIFICATO CHE HA EFFETTUATO L’ESAME CE DI TIPO ***NOTIFIED BODY THAT EXECUTED THE EC TYPE-EXAMINATION***	**KIWA CERMET ITALIA S.p.A (n. 0476)** **Via Cadriano, 23** **40057 Cadriano di Granarolo (BO) - ITALY**
NUMERO DI ATTESTATO D’ESAME CE DI TIPO ***EC ASSESSMENT REPORT NUMBER TYPE***	**C23E553**

PERSONA AUTORIZZATA A COSTITUIRE IL FASCICOLO TECNICO: *PERSON AUTHORISED TO COMPILE THE TECHNICAL FILE:*	**SCM GROUP S.p.A.** **Via Emilia, 77 - 47921 Rimini (RN) - Italy**

IL RAPPRESENTANTE DELEGATO DEL FABBRICANTE
THE MANUFACTURER'S DELEGATED REPRESENTATIVE

Place, Date

XXXXXXXX

(IT) DICHIARAZIONE IN LINGUA ORIGINALE
(EN) TRANSLATION OF THE DECLARATION IN ORIGINAL LANGUAGE

NOTICE

The "EC"/"EU" declaration of conformity, provided by the manufacturer with the machine, is printed on anti-counterfeiting paper and it must always accompany the machine.

FACSIMILE

1 Warnings

NOTE The machine must be checked as soon as it arrives. If it is damaged or if certain parts are missing, write to the shipping company highlighting the problem found and inform your supplier immediately.



DANGER

Remember that this machine has been designed for professional use and it must be used only by expert operators who have been adequately trained to use it and aware of the health and safety regulations.

WORK AREA SAFETY

- The work area must be well lit (minimum recommended lighting intensity 500 LUX) and have enough space to ensure that work and maintenance can be carried out without hindrance and ensure the operator is always outside potential danger zones.
- The flooring must be level, well maintained and free from any loose materials (such as offcuts and shavings) and must not be slippery.
- The work zone must only be occupied by the machine operator.
- The operator shall never stay in the trajectory where eventual splits or tool parts are ejected.
- If along this trajectory there is another work station (that is another machine) or a passage for persons, immediately install proper protective barriers.
- DO NOT allow children, pets or any unauthorised personnel into the work area.
- The machine may not operate in explosive rooms.

ELECTRICAL SAFETY

- The plugs of the machines must match the socket. Never change the plugs in any way.
- DO NOT use adapters for plugs on machines with grounding.
- Avoid touching surfaces with grounding with the body.
- DO NOT USE the machine in DANGEROUS ENVIRONMENTS.
- DO NOT use machines in humid, wet locations or where there are flammable or harmful fumes.
- If the use in a humid environment cannot be avoided, use a residual current device (RCD) as the safety device to provide protection against electrocution and electrical fires.
- DO NOT tamper with the cable. Never use the cable to transport, pull or disconnect the machine.
- Keep the cable away from heat, oil, sharp edges or mobile parts.
- Use an extension with grounding, adequately sized for the machine amperage.
- The cables with grounding reduce the risk of electrical shock.
- Under-sized cables create excessive heat.
- Always replace damaged extensions.

PERSONAL SAFETY

Ultimately, safety is in the hands of the operator. There is a certain degree of risk whenever any kind of machine tool is used and this should never be forgotten.

- Always work with the maximum attention on what you are doing.
- Do not use the machine under the influence of alcohol, drugs or sleep inducing medication.
- Wear PERSONAL PROTECTION EQUIPMENT (PPE) before starting to work.
- Always protective goggles.
- In case of long machining breaks or machine stops set the main switch to "OFF/0".
- The operator must never leave the machine unattended when it is running.
- Before starting the machine make sure that on the worktable or inside the guard there are no wood residues or parts which do not relate to the working.
- Remove any wrench or adjustable wrench before starting the machine.
- Get into the habit of checking that no tool (wrenches and adjustable wrenches) has been left on or inside the machine, before starting it.
- The machine must only be used by properly instructed personnel.
- Operator training must include information concerning the dangers associated with use of the machine and the relevant safety precautions.
- Do not ignore the safety principles due to a familiarity with the operations, due to a frequent use of the machine.
- Always disconnect the machine from the supply sources before performing maintenance operations.
  Make sure that the switch is in the OFF position before reconnecting.
- DO NOT exaggerate. Keep stability and balance at all times.

MACHINE SAFETY: OPERATION AND MAINTENANCE

- DO NOT force the machines. Work at the speed that the machine or the accessory has been designed for.
- The tools shall be fitted and set when the machine is off, STILL TOOLS and with proper instruments (gauge, comparator).
- Do not leave unused tools where children and untrained people may reach them.
- DO NOT use the machine if you are not an authorised and trained operator.
- It is FORBIDDEN to use the machine in any way other than that for which it has been designed or any way other than described in this manual.
- DO NOT use the machine without the protection provided for each job or to remove parts of it (IT IS FORBIDDEN to disassemble fixed and mobile shelves and bypass the safety micro-switches).
- DO NOT use the machine differently from the indications described above.
- DO NOT handle the tools without individual protective equipment (not supplied by SCM) for the hands and forearms.
- DO NOT use the machine without individual protective equipment from noise (ear plugs) (not supplied by SCM).
- DO NOT use the machine without extraction.
- DO NOT use the machine without having assessed the need to use individual protective equipment (not supplied by SCM) in relation to wood dust (we recommend the use of individual protective equipment: hard wood dust is carcinogenic).
- DO NOT use the machine if the area around the machine is not flat, well maintained and free of loose material (e.g. shavings and rejects).
- DO NOT machine different materials from the ones that the machine has been designed for and that are not set out in this manual.
- DO NOT work materials with different dimensions from those for which the machine has been designed and which are not indicated in this manual.
- DO NOT make modifications to the machine.
- DO NOT allow children, pets or any unauthorised personnel into the work area.
- DO NOT use tools of a size not compatible with the machine technical specifications.
- IT IS FORBIDDEN to use tools that are not suitable for the work piece.
- Before fitting any tool, check that the contact surfaces are clean, free of marks and perfectly flat.
- Keep handles and grip surfaces dry, clean and free of oil and grease.

2 General and safety information

2.1 Importance of the instruction manual..... 10
2.2 Machine identification..... 11
2.3 Documentation supplied with the machine..... 12
2.4 Technical support..... 13
2.5 Consultation notes - Abbreviations - Acronyms - Glossary..... 14
2.6 Symbols in the instruction manual..... 16
2.7 Plates on the machine..... 18
2.8 DESCRIPTION OF THE MACHINE..... 22
2.9 Conditions foreseen for the use..... 24
2.10 Tools that can be used..... 25
2.11 Environmental conditions..... 26
2.12 Incorrect use that can be reasonably expected..... 27
2.13 RESIDUAL RISKS..... 28
2.14 Personnel training..... 29
2.15 Safety warnings..... 30
2.15.1 Personal safety..... 30
2.15.2 Security in the machine..... 31
2.15.3 Tools safety..... 32
2.15.4 Working area safety..... 32
2.15.5 Safety during maintenance..... 33
2.15.6 Safe working practise..... 34
2.16 Emergency conditions..... 36
2.17 REMOVAL - STORAGE - SCRAPPING..... 37
2.17.1 Dismantling the device..... 37

2.1 Importance of the instruction manual

Aim

The instruction manual provides the user with all the information necessary to operate the machine safely.

The machine is accompanied by:

- "original instructions", in Italian
- "translation of the original instructions", in the language of the country of destination

Notes for use

WARNING

Before using the machine, "authorized operators" for use and maintenance must read and understand this instruction manual.

- The manufacturer declines any responsibility for damages to people, animals or property resulting from the non-compliance with the warnings and operating methods described in this manual.
- Some images in this manual may not correspond to the actual machine configuration. This does not impact on the validity of the information provided and does not impact on the operator's safety.

NOTE

- The instructions manual must always be available. If there are any doubts or difficulties in understanding the instruction manual, contact the manufacturer. Understanding it incorrectly can compromise the safety of the authorized operators.

About the manual

NOTICE

This manual is an integral part of the machine: it must be stored for future reference and must always accompany the machine, even if it is transferred to a third party.

NOTE In case of loss or deterioration of the instruction manual, request a copy from the Manufacturer indicating the identification data of the document (code, edition) and the serial number of the machine.

The instruction manual contains proprietary information.

Reproduction and/or disclosure in whole or in part, in any form, without the manufacturer's written authorization is prohibited.

2.2 Machine identification

The machine is identified by the words engraved on the metal plate on the machine's base.



Name	Abbreviated and conventional description of the name of the machine and its function
Brand	Merchandise mark
Year	Production year
Serial no.	Serial number
kg	Weight (kg)
Type	Machine type
Model	Machine model
Un V	Rated voltage (volt)
~	Phases number (alternate current)
In A	Rated current (ampere)
F Hz	Frequency (hertz)
Icc. kA	Short circuit breaking capacity of the protective device (kA)
W.D.	Wiring diagram number
Comp.	Machine version
Ref.	Internal reference

2.3 Documentation supplied with the machine

The documentation supplied with the machine consists of:

- Instruction manual in paper copy (this one)
- Spare parts catalogue
- Electrical diagram
- Pneumatic diagram (if present)
- User and programming manual (if available)
- EC declaration of conformity* (See FACSIMILE)
- Technical generic documentations of machine components is not necessarily included

"CE" literally means "Conformité Européene" ("European Conformity").

With the "EC declaration of conformity", the manufacturer certifies complete compliance of the line with the relevant provisions of the "Machinery Directive" applicable upon it being placed on the market.

The machine is subject to The provisions set out in Annex IV of Directive 2006/42/CE.

In the event of modifications, tampering or alterations of the line or parts of the line that are unauthorised by the manufacturer, the "EC declaration" shall cease to be valid.

NOTE The pneumatic and electrical diagrams are for the exclusive use by specialised personnel appointed by the manufacturer, therefore they only show the information in Italian and English.

NOTICE

All the documentation supplied with the machine, with particular reference to this manual, to the EC declaration of conformity, plus the electrical and pneumatic diagrams, must obligatorily accompany the machine should it be sold to another user.

NOTICE

*THE "EC DECLARATION OF CONFORMITY" IS DRAWN UP IN SINGLE COPY, IT MUST ALWAYS REMAIN WITH THE OWNER OF THE MACHINE AND IT MUST BE STORED WITH THE MACHINE: the original copy, printed on watermarked paper, is provided.

The EC declaration of conformity refers to the machine, complete with all its possible configurations based on the list of options in the catalogue.

NOTE the devices on the price-list can change at Manufacturer’s discretion

2.4 Technical support

The technical support service provides information and support via telephone, in writing and training and maintenance interventions.

Contact information

When writing or phoning the dealer or directly the Manufacturer for any reason concerning the machine, always supply the following information:

- Machine type
- Machine model
- serial number
- Voltage and frequency
- Date of purchase
- name of dealer from whom machine was purchased
- Detailed description of any faults found
- detailed information on the machining tasks to be executed
- Period of use - number of hours of operation

Technical Support Service

Address: SCM Industria SpA **-** Via Valdicella, 7 - 47892 Gualdicciolo (RSM) - San Marino

Web - site: www.scmgroup.com

Spare Parts Office (IT): Tel. +39 0541 674706

E-mail: spareparts@scmgroup.com

Technical Support Service: Tel. +39 0541 700100

E-mail: scm_service@scmgroup.com

NOTICE

Use only original spare parts SCM. The manufacturer will not be responsible for any damages due to the use of non-original spare parts.

2.5 Consultation notes - Abbreviations - Acronyms - Glossary

Layout of the pages

The top contains:

- the company logo
- the number of the chapter
- the description of the chapter;

The bottom contains:

- the machine model (if present)
- the machine type (if present)
- the serial number (if present)
- the edition and revision of the Instruction Manual
- the page number

Abbreviations - Acronyms

Chap.	Chapter	**ca.**	about
CC	Continuous current	**AC**	alternate current
NC / CNC	Numeric Control	**EN**	European Norm
DX - R	right	**SX - L**	left
D -φ	diameter	**PPE**	Personal Protective Equipment
E.M.	of the electrospindle	**.**	.
Fig.	Figure	**H**	height
min.	minimum	**max**.	maximum
MDF	Medium Density Fiberboard.	**Ref**.	Reference
No.	number	**pos**.	position
OPT	optional	**STD**	standard
page	page	**par**.	paragraph
PC	Personal Computer	**a.s.l.**	above sea level
PES	expert person	**PAV**	warned person
o.s.	operating system	**sw**	software
UPS	Uninterruptible power supply unit	**.**	.
<	“Less than..." symbol "	**>**	"Greater than..." symbol "
≤	"Equal to, less than..." symbol "	≥	"Equal to, greater than..." symbol "

Glossario

Workpiece	The part being machined of the material indicated in the chapter "Materials workable (Not workable materials)"

NOTICE In the manual the definition “SCM”, “Manufacturer” replace the complete name SCM Industria SpA.

2.6 Symbols in the instruction manual

NOTE The present manual applies to all versions of machines. Instructions and information applicable only to a particular version or versions are indicated with a Note or symbol.

Symbol	Description
	Indicates that the information is specifically for : **ASSIGNED OPERATOR**
	Indicates that the information is specifically for : **TRANSPORT OPERATOR**
	Indicates that the information is specifically for : **MECHANICAL MAINTENANCE OPERATOR**
	Indicates that the information is specifically for : **ELECTRICAL MAINTENANCE OPERATOR**
	Indicates that the information is specifically for : **COMPANY SAFETY MANAGER**
	Indicates that the information is specifically for : **MANUFACTURER'S TECHNICIAN**



DANGER

Indicates a danger with a high risk probability that if not avoided will lead to death or serious injuries.



WARNING

Indicates a danger with a medium risk probability that if not avoided could lead to death or serious injuries.



CAUTION

Indicates a danger with a low risk probability that if not avoided could lead to moderate or light injuries.



NOTICE

Information to prevent damages to the machine

NOTE Neutral and positive information that emphasizes or adds information to the main text. Provides information that can only be applied in special cases.

Symbols

	Machine user
	Users cannot enter this zone with the machine functioning or switched on
	Ear protective equipment must be used
	Eye protective equipment must be used
	Hands protective equipment must be used
	Respiratory tract protective equipment must be used.
	**MACHINE OFF**: Before performing any type of maintenance and/or adjustment operation on the machine, cut off all the supply sources (electrical and pneumatic). Make sure that the machine is actually stopped and that it cannot be started accidentally (main switch in position “0” and padlocked and compressed air valve closed and padlocked).
	**PROHIBITED**: indicates manouvres, commands or others that cannot be carried out as they can create very dangerous situations for persons and damage the machine.
	**OPTIONAL**: devices available only on request
	Special devices, not included in the price list, available only upon specific request and after technical verification.

2.7 Plates on the machine

NOTICE

The operator must pay attention to the signs and plates fixed on the machine.

Ensure that the labels are always clearly visible. Replace any labels which are damaged or illegible. Always observe the safety labels on the machine.

The signals and plates must be regularly inspected and cleaned in order maintain them clearly legible.

If the signs and the plates are not clearly legible, contact the manufacturer to replace them.

If they need to be replaced, proceed as follows:

- Remove the old sign or plate.
- Clean the zone with detergent.
- Position the new sign or plate in the same position of the one removed.

FIG.	REF.	SIGNAL	TYPE	DESCRIPTION
B	Ap01a	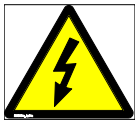	Danger	Electrocution
B1	Ap07d		Danger	Because of rotating or moving parts, hazards of crushing of the upper limbs are present
D	Ai03b		Information	Indication of electricity disconnecting switch
E		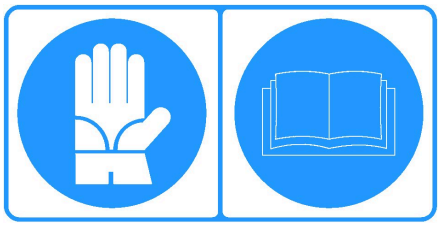	Compulsory	Wear gloves to handle the tools Read the manual and follow the manufacturer's instructions
G			Information	Technical specifications plate
L	Ai08b		Information	Lifting points
M			Information	Locking symbol

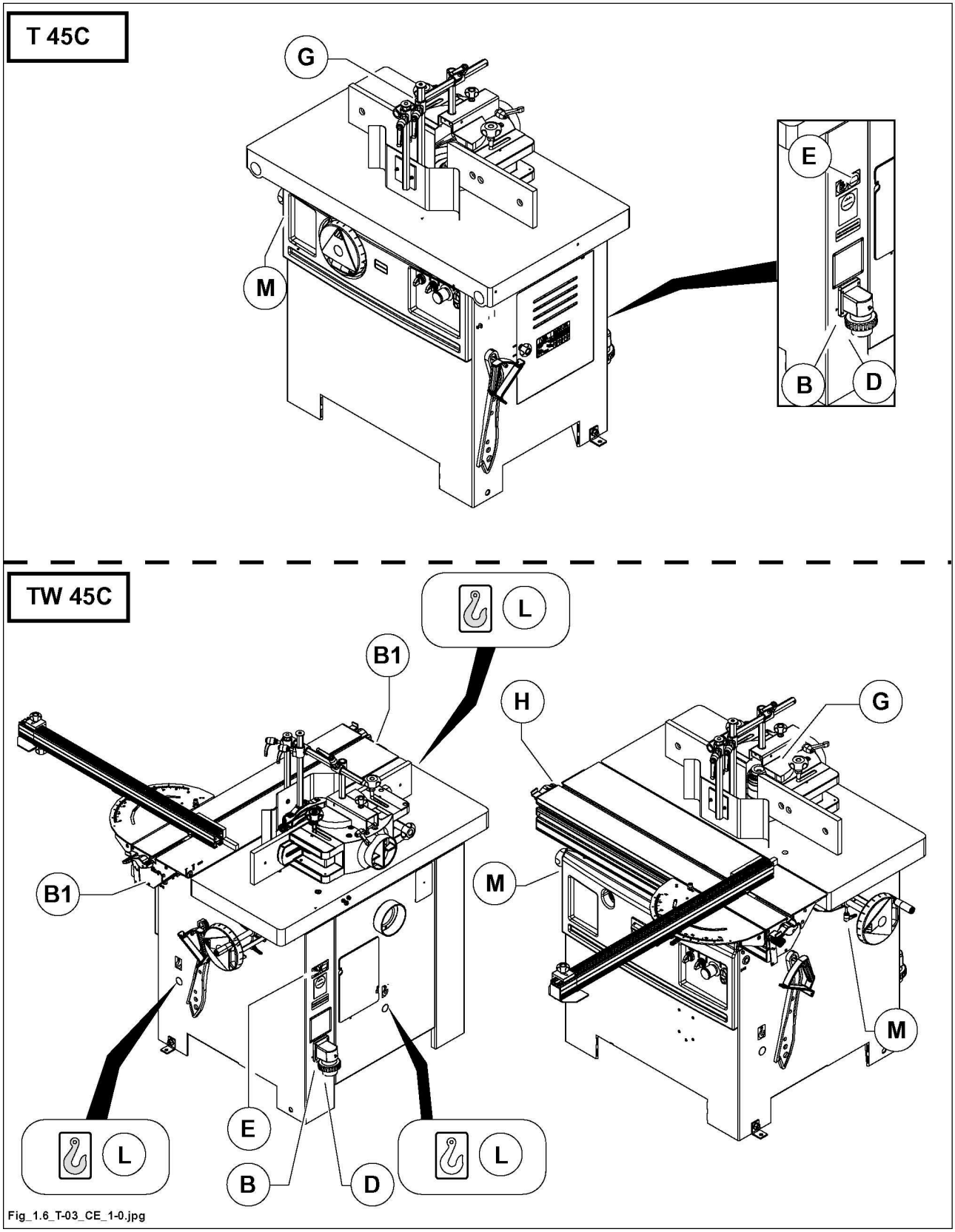

Fig_1.6_T-03_CE_1-0.jpg

FIG.	REF.	SIGNAL	TYPE	DESCRIPTION
N	Ap02a		Danger	Cut fingers
R1			Information	Moulding hood warning plate
V		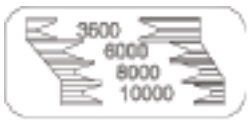	Information	Spindle speed plate for belt position
Z	--		Information	Spindle speed plate for tool type and diameter
1	--		Information	SPINDLE tilting handwheel plate
2	--		Information	SPINDLE lifting handwheel plate

T 45C

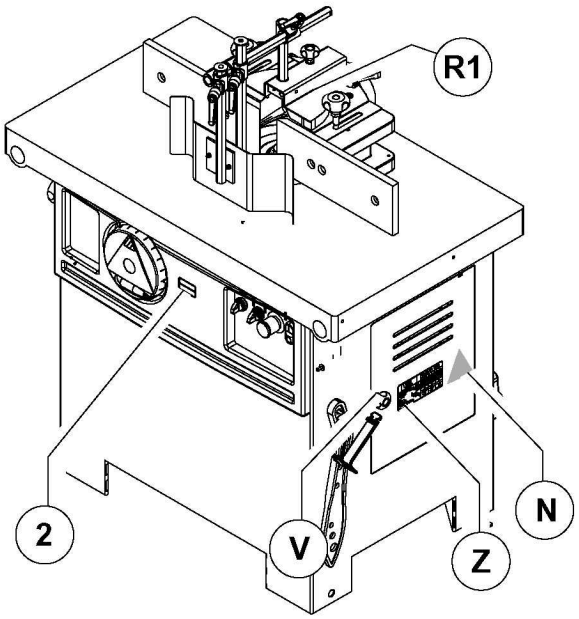

TW 45C

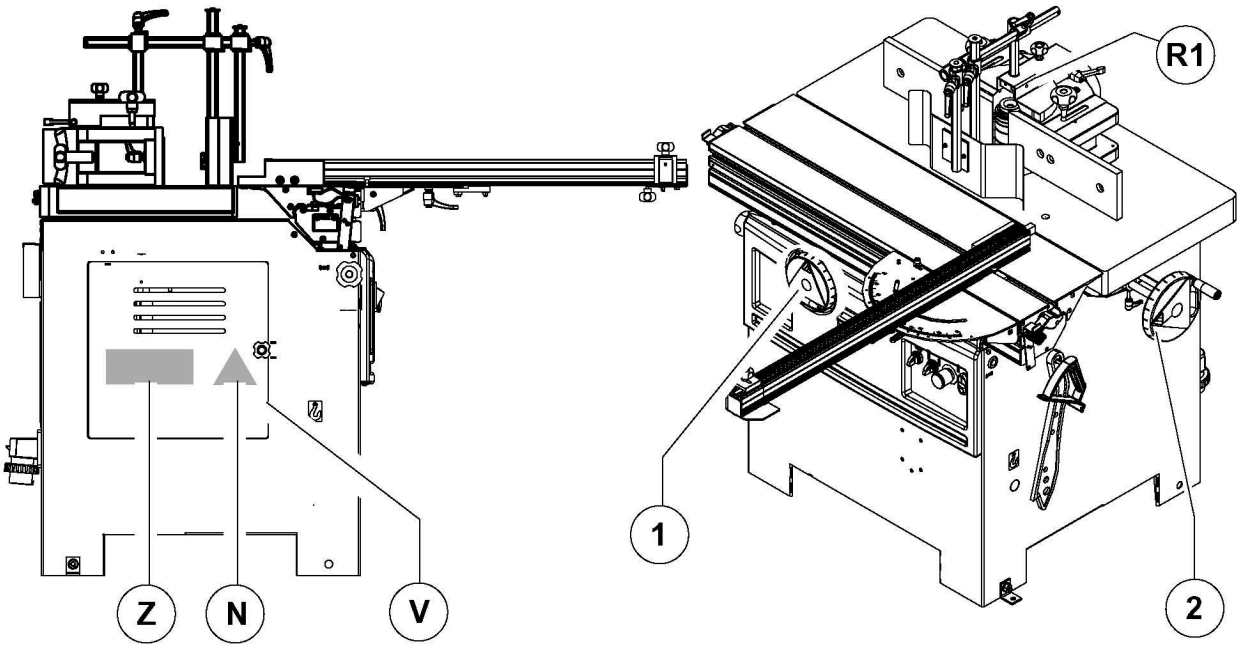

Fig_1.6A_T-03_1-0.jpg

2.8 DESCRIPTION OF THE MACHINE

The machine is a solid, extremely stable fixed or tilting shaft spindle moulder. Options include interchangeable spindle moulder shaft and reversible spindle moulder rotation. Adjustable spindle guides and accident protection make machining precise and safe.

The spindle moulder shaft locking system for changing milling tools is easy and convenient for the operator. The operator can choose the most suitable speed for each type of work.

The references and description of the main organs of the machine are provided for the purpose of preliminary and rapid familiarisation with any further citation within this publication. Please pay attention to the following descriptions:

- 1) **SPINDLE MOULTER LIFTING**
- 2) **SPINDLE MOULDER UNIT**
- 3) **SPINDLE MOULDER TILTING**
- 4) **CARRIAGE**
- 5) **CONTROL PANEL**
- 6) **WORKTABLE**
- 7) **SUPPORT FRAME**
- 8) **PRESSER**
- 9) **WOOD PUSHER**
- 10) **ELECTRICAL SOCKET FOR CONNECTION TO THE POWER LINE**
- 11) **TELESCOPIC GUIDE**
- 12) **SPINDLE MOULDER LIFTING LOCK**
- 13) **SPINDLE MOULDER TILTING LOCK**
- 14) **WORKTABLE SIDE EXTENSION**
- 15) **SLIDING TABLE BLOCKAGE**
- 16) **ANGLED CUTS DEVICE**
- 17) **WORKTABLE FRONT EXTENSION**
- 18) **SET OF TOOLS AND WRENCHES FOR USE AND MAINTENANCE**

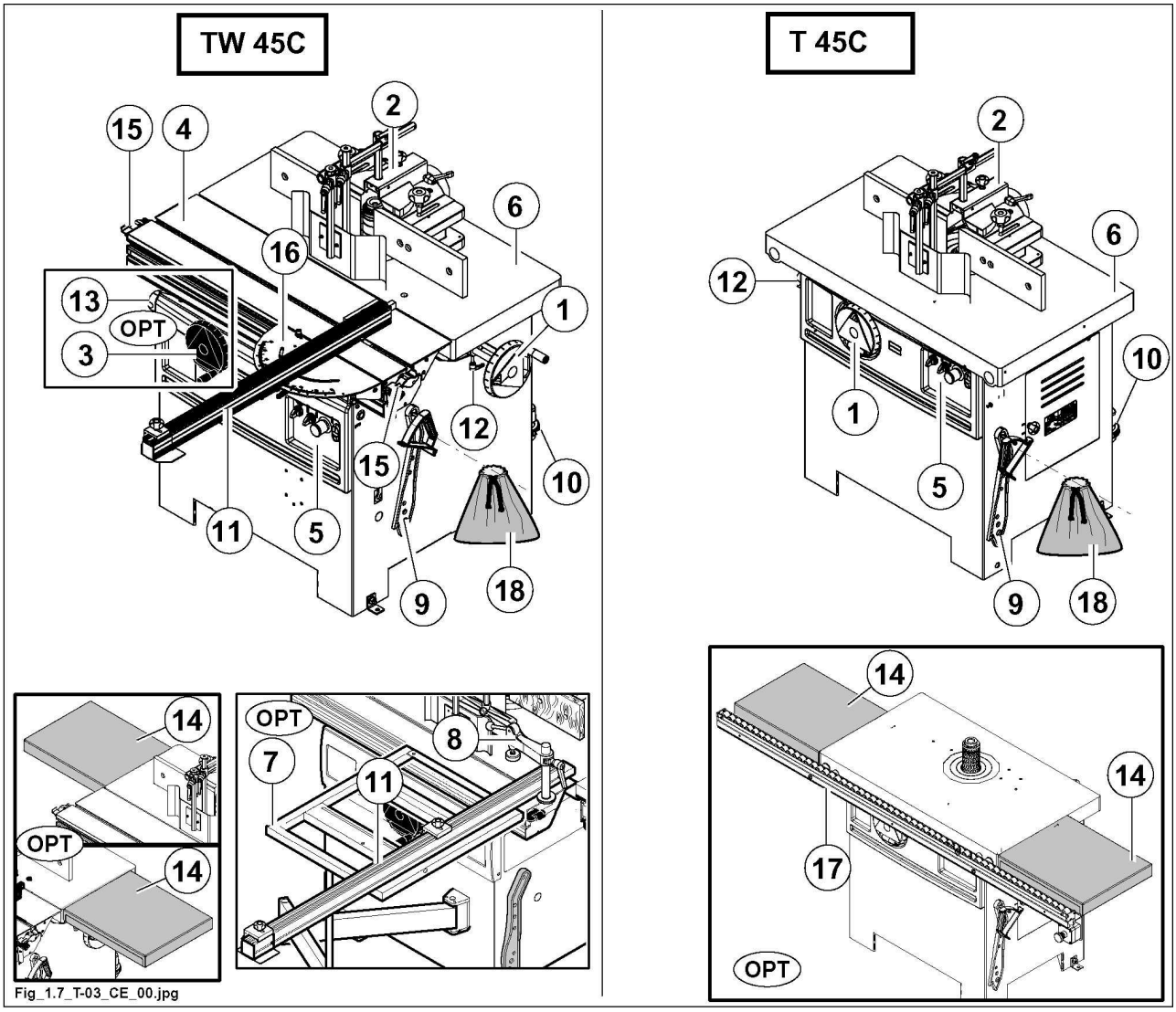

Fig_1.7_T-03_CE_00.jpg

2.9 Conditions foreseen for the use

NOTICE

this machine is intended for continuous production processes ("continued production use") .

This machine has been designed and built to machine the wood materials with similar physical characteristics to wood, wood-based material, cork, rubber or hard plastic.

Machining permitted: tenoning, profiling, interrupted milling, shaping.

Are excluded from the processes:

metals (bronze, aluminium ...),

the wood-based composite (wood cement)

milling with other tools from single cutters or in packs and without the use of the protection with which this machine is provided.

DANGER

materials different from those quoted above, since dissimilar to wood, are thus prohibited: the user is solely responsible for any damage caused by machining such materials.

DANGER

the fitting of circular blades on the spindle is not permitted.

It is forbidden to insert shims between the spacer rings to willingly unbalance the tools.

DANGER

Use tools fit for any type of material that you want to process.

DANGER

the material to be machined must not contain any metal parts.

SPECIALISED PERSONNEL

for any requirement or advice on cutting plastic materials, contact the tool manufacturer or the local SCM dealer.

2.10 Tools that can be used

The machine has been designed to only use tools for manual feed and marked "MAN", compliant with standard EN 847-1 : 2013 and 847-2 :2013 and suitable for the type of material used.

By manual feed, we mean:

- guide the pieces by hand
- with sliding trolley pushed by hand
- with feeder.

Features of the tools required for manual feed:

- max. chip thickness 1.1 mm,
- tool shape round,
- chip exhaust space narrow.

The link between the tool diameter and the rotation speed is explained in paragraph" Spindle speed selection".



SPECIALISED PERSONNEL

For the use, adjustment and repair of tools, follow the manufacturer's instructions.



DANGER

only use TOOLS which comply with the standards in force. NEVER USE TOOLS that are not stamped with the maximum speed of rotation and the manufacturer's details.

2.11 Environmental conditions

The environment conditions required are:

- relative humidity: Max 50% at 40 °C (higher relative humidity values are allowed at lower temperatures: for example 90 % at 20 °C)
- temperature with the machine operating: Min. + 10°C ; Max + 35°C
- temperature with the machine off: Min. + 5°C ; Max + 35°C
- altitude: max 1000 a.s.l. (at higher altitudes, consult Manufacturer)

NOTE The electrical equipment resists the effects of transport and storage temperatures in the range between -25 ° C and +55 ° C (up to +70 ° C for periods of time not exceeding 24 h).Under different conditions, take appropriate precautions to protect it.

Sufficient lighting must be provided, general or localised at the workstation, min. 500 LUX.

DANGER

always connect the machine to a suitably dimensioned extraction system (see paragraph "Connection to the suction system").

NOTICE

A clear working area around the machine is fundamental for safety: the floor must be flat (a cement industrial floor), well-kept and free of material, e.g. shavings, scraps, etc.

The machine is designed for use indoors in industrial environments.

PROHIBITED

The machine cannot be started in environments classed as potentially explosive in accordance with European Directive "99/92/EC".

NOTICE

For proper functioning, it is advisable to use the machine in an environment with temperatures between 18° and 30° C and relative humidity between 30% and 65%.

2.12 Incorrect use that can be reasonably expected

- DO NOT use the machine if you are not an authorised and trained operator.
- It is FORBIDDEN to use the machine in any way other than that for which it has been designed or any way other than described in this manual.
- DO NOT use the machine without the required guards for every machining process or removing part of the guards (DO NOT disassemble the fixed and mobile guards, bypass the safety microswitches)
- It is FORBIDDEN to use the machine in ways that differ from those described (see Chap. "Conditions foreseen for the use").
- It is FORBIDDEN to use the machine in environmental conditions other than those described (see Ch. " Environmental conditions")
- DO NOT handle the tools without individual protective equipment (not supplied by SCM) for the hands and forearms.
- DO NOT use the machine without individual protective equipment from noise (ear plugs) (not supplied by SCM).
- DO NOT use the machine without extraction.
- DO NOT use the machine without having assessed the need to use individual protective equipment (not supplied by SCM) in relation to wood dust (we recommend the use of individual protective equipment: hard wood dust is carcinogenic).
- DO NOT use the machine if the area around the machine is not flat, well maintained and free of loose material (e.g. shavings and rejects).
- DO NOT machine different materials from the ones that the machine has been designed for and that are not set out in this manual.
- DO NOT machine materials of dimensions that the machine has not been designed for and that are not set out in this manual (see Chap. "Conditions foreseen for the use").
- DO NOT feed the machine with piece to machine in the same rotation direction as the tool.
- DO NOT use tools not included in the standard 847-1: 2013 and 847-2 :2013, or not marked MAN, or with dimensions not compatible with the machine's technical specifications.
- IT IS FORBIDDEN to use tools that are not suitable for the work piece.
- Circular blades may not be fitted to the spindle.
- It is not permitted to insert shims between the spacing rings of the spindle to willigly unbalance the tools.
- IT IS FORBIDDEN to process workpieces that are too small for the characteristics of the machine, see paragraph "Dimensions of the workpiece".
- DO NOT feed small pieces without the piece pusher (see Ch. " Wood pusher").
- DO NOT make modifications to the machine.
- It is FORBIDDEN to allow children, pets or any unauthorised personnel into the work area.

NOTE

Performing modifications, voids the machine's Declaration of Conformity.

For damages deriving from improper use the user is solely responsible.

PROHIBITED

DO NOT use the machine without having first checked that the safety protections have been installed correctly and secured with the devices required and in the way indicated in this manual. Before every use, with the machine off and tools stopped, try to move the protection to ensure it is installed correctly and fixed completely.

2.13 ⚠ RESIDUAL RISKS

There is a certain degree of risk whenever any kind of machine tool is used and this should never be forgotten.

Ultimately, safety is in the hands of the operator.

This machine complies with the safety standards in force and has the very latest safety features.

These protections are effective as long as they are properly used and kept in efficiency.

Even if the safety prescriptions are kept and the machine use occurs in accordance with the rules described in this handbook, the following risks may rise:

- Contact of the tool with the tenoning table.
- Contact with the standstill or rotating tool.
- Contact with the rotating spindle.
- Contact with rotating members (belts, pulleys, chains ...).
- Kickback of the workpiece or of its parts (splits): never stop in the position corresponding to the trajectory of possible split ejection.
- Ejection of tool inserts: never stop in the position corresponding to the trajectory of possibile split ejection.
- Dust inhalation in case of working without suction.
- Electrocution from contact with live parts
- Contrary direction of tool rotation due to wrong electric connection.
- Danger due to wrong working position of the operator.
- Possible squashing of the hands, with the fixed parts of the machine, during the sliding table motion.
- Danger caused by the wrong tool fitting.
- Possible risk of rejection of the piece
- The machine can cause fires during operation.
  Fire due to the incorrect use of the machine along with the buildup of shavings and/or dust.
- In the event of a power failure, the tool can continue to rotate beyond the maximum switch-off time.
- Danger due to exposure to machine noise.
  Some factors which reduce noise are:
  - Correct tool selection
  - Correct speed selection
  - Tool and machine maintenance
  - Correct use of hearing protection.

DANGER

If there is no power supply the electronic brake does not work. CAUTION! MOVING TOOLS. Do not insert hands in the danger area.

2.14 Personnel training

It is obligatory that all operators receive adequate training for the use, adjustment and function of the machine.

Machine operators must read the handbook and pay particular attention to safety warnings, more specifically, operators must have an understanding of:

In particular:

a) the principles of the right use and operation of the machine, the adjustment of the fence and guards and the use of devices for special working.
b) How to handle the work-pieces during machining.
c) Position of the hands with respect to tools, before, during and after maintenance.
d) The right selection of the tools.
e) The piece feed to the tool which shall occur in the contrary direction to the spindle rotation direction.
f) The selection of the proper spindle speed required by the tool.

Operators must also be informed vis-à-vis risks associated with using the machine and the precautions that need to be taken. They must be instructed to carry out periodic inspection of safety guards/devices.

NOTE

a suitable padlock must be procured to lock the main power switch.

The keys are the responsibility of the qualified, authorised operator.

2.15 ⚠ Safety warnings

1. Carefully read this instructions manual completely before starting the machine.
2. Read the safety info plaques attached to the machine and observe the relevant information.
3. The machine must only be used by properly instructed personnel.
4. Operator training must include information concerning the dangers associated with use of the machine and the relevant safety precautions.
5. The operator must receive training and instruction on proper use of safety devices.

   Moreover he must be trained to regularly check these guards and safety devices.
6. The operator must never leave the machine unattended when it is running.
7. The machine is designed for use by one operator.
8. This machine has been constructed to offer maximum safety together with maximum performance.
9. Any unauthorised modification of the machine exonerates the manufacturer from liability vis-à-vis any resulting damages.
10. Do not use the machine under the influence of alcohol, drugs or sleep inducing medication.

Ultimately, safety is in the hands of the operator. There is a certain degree of risk whenever any kind of machine tool is used and this should never be forgotten.

2.15.1 ⚠ Personal safety

1. Before starting the machine the operator must have read and understood this handbook.

   Your eyes are the best safety device you have: carefully look before moving.
2. Certain objects about your person could cause accidents, therefore remove rings, watch, and bracelet; make sure your sleeves are secured or buttoned tightly around your wrist, remove your tie it could dangle down and catch in part of the machine, tie back hair securely with hair bands, elastic bands, clips etc., wear safety boots recommended by the safety standards in all countries over the world.

ALWAYS WEAR THE FOLLOWING INDIVIDUAL PROTECTIVE EQUIPMENT (IPE) (NOT SUPPLIED BY SCM **) BEFORE STARTING TO WORK:**

a) **Proper aprons, e.g: aprons made of double leather with synthetic fiber cloth insertion (not supplied by** SCM **) to protect the operator in case of splinters ejection.**
b) **Goggles to protect eyes (or use suitable screens).**
c) **Proper means for ear protection. (ear muffs and plugs etc.).**
d) **Proper means against dust inhalation (masks).**
e) **Gloves for handling the blades.**
f) **Shoes with steel toe caps and rubber soles.**

2.15.2 ⚠ Security in the machine

DANGER

it is strongly recommended that the machine is fixed to the floor. Fix the supplied angles to the machine feet and fix to the ground with expansion bolts (not supplied) (see Par. " Positioning").

1. Proceed with the utmost caution before starting any job and periodically inspect safety guards/devices.

   Follow the instructions for grounding the machine's electrical system.
2. Never start the machine without having properly closed the covers for the spindle and the belts.
3. Before starting the machine make sure that on the worktable or inside the guard there are no wood residues or parts which do not relate to the working.
4. Never machine pieces too small/big for machine capacity.

   See paragraph "Dimensions of workpiece to be thicknessed" for dimensions.

   Ensure that the pushers are intact and efficient.
5. Do not process machine pieces with defects (deflections, clefts, knots, metallic parts: like nails, screws etc).
6. The guards and fence halves are to be fitted and set when the machine is off.
7. Work must only be carried out with safety guards correctly positioned and in good working order:

   Make sure that all the indicator lamps function correctly (replace faulty components immediately)

   the machine must not be used if these conditions are not met.
8. In case of long pieces use roller tables or table extensions (not supplied by SCM).
9. The dust extraction hood must be connected to the extraction system.

   Work only with the intake system inserted.
10. Test machinings, to check the correct adjustments of the tool cannot be performed without the necessary protections.
11. Do not try to remove waste or other parts of the workpiece from the work area while the machine is machining
12. Push the work piece forwards by using a proper pusher or feeder.
13. After a given working period the transmission belts may become slack; this may cause an increase of the time required to stop the tool.

    Immediately re-tension them as described in par. "Belt stretching" .
14. Periodically remove shavings and dust to avoid the risk of fire - always perform this operation with the machine switched off.

DANGER

in case of long machining pauses or machine stops remove the power supply cable socket. In the switches with electronic brake, even with the motor stopped, the motor is not galvanically disconnected from the mains. The switch supplies the motor with voltage even after it is switched off.

PROHIBITED

DO NOT use the machine without having first checked that the safety protections have been installed correctly and secured with the devices required and in the way indicated in this manual. Before every use, with the machine off and tools stopped, try to move the protection to ensure it is installed correctly and fixed completely.

2.15.3 ⚠ Tools safety

PROHIBITED

the use of circular blades fitted to the spindle is not permitted.

It is forbidden to insert shims between the spacer rings to willingly unbalance the tools.

1. Before fitting any tool, check that the contact surfaces are clean, free of marks and perfectly flat.
2. The tools shall be fitted and set when the machine is off, STILL TOOLS and with proper instruments (gauge, comparator).
3. Ensure that the tools are perfectly balanced, sharpened and accurately tightened.

   Not sharp tools reduce not only the quality of the finished piece but they increase the piece kickback danger.
4. Mount the tools in the right machining direction.
5. For fastening the saw blade to the spindle, the use of rings or bushes not prescribed by SCM is forbidden.
6. Never use deformed saw blades and do not exceed the speed limit indicated on them and prescribed by the tool manufacturer or by SCM .

   Make sure that the dimensional limits and the specifications of the tools suitable for the machine have been stored.
7. Only use tools for manual feed and marked "MAN", compliant with standard EN 847-1 : 2013 and 847-2 :2013 and suitable for the type of material used.
8. Before starting the machine make sure that the tools do not touch the parts of the machine.
9. Start machining only when the tools have reached their operating speed.

2.15.4 ⚠ Working area safety

The work area must be well lit and have enough space (see Par. "Work area") to work and perform maintenance operations comfortably, so that the operator is always outside a possible danger zone.

The flooring must be level, well maintained and free from any loose materials (such as offcuts and shavings) and must not be slippery.

The work zone must only be occupied by the machine operator.

The operator shall never stay in the trajectory where eventual splits or tool parts are ejected (see Par. "Work area").

If along this trajectory there is another work station (that is another machine) or a passage for persons, immediately install proper protective barriers.

2.15.5 Safety during maintenance

DO NOT THINK that the electric current is switched off during the maintenance .... CHECK IT PERSONALLY!

Strictly follow the indications provided for the frequency of the controls and maintenance of devices subject to checks and/or wear.

1. Before performing any operation, cut off the electrical supply and disconnect the power supply cable (socket T) from the plug S.

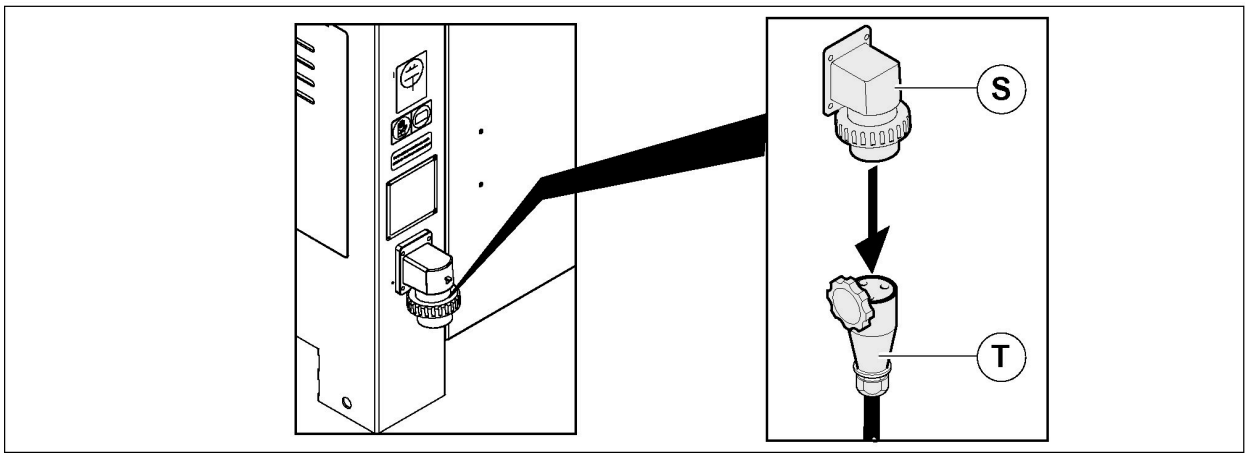

2. Stop the machine completely before cleaning and before removing any protection components for maintenance.
3. General cleaning of the machine (especially work tables) and the surrounding floor area is an important safety factor.
4. Regularly carry out cleaning and maintenance operations: remove chips and dust to avoid fire risk.
5. Use proper gloves for handling the tools.
6. The tools require a regular maintenance: when necessary replace them.
7. In case of any trouble concerning the machine, the guards and the tools, it is necessary to immediately take the proper measures.

2.15.6 Safe working practise

(Copy of C enclosure of EN 848-1 European Norm)

C.1 General information

These notes are given as examples for the safe operation of the machine.

C.2 Operator training

It is necessary that all operators of vertical spindle moulding machines are properly trained in the use, adjustment and operation of the machine.

In particular:

a) The principles of the correct set up operations and the use of the machine including the right use and adjusting of the devices for workpiece locking and guidance, the selection of shields and tools.
b) The safe handling of the workpiece during milling operations.
c) How to adjust safety equipment such as shapes, table extensions and mechanical strikes.
d) The use of personal ear and sight protective devices.

C.3 Stability

To ensure the correct and safe operation of the machine, it shall be stable and and securely fixed to the floor (see Chapter 4).

C.4 Machine preparation and set up

Before carrying out the machine equipment :

a) make sure that the tools are sharp, selected and set according to the tool manufacturer instructions.
b) shut off the machine from the power supply
c) reduce the bore on the table in order to get the room between table and spindle as small as possible
d) handle the tools with extreme caution

C.5 Workpiece guidance

It is important to use:

a) the hood-fence unit to ensure during the milling the proper piece guidance.
b) When possible a proper element joining the fence halves in order to minimise the gap between the tool and the fence halves.
c) A pusher for the manual piece feed or when possible a feeder which may be switched off when it shall not be used.
d) Roller tables or table extensions to support long pieces.

C.6 Direction of rotation and rotation speed selection

C.6.1 Rotation direction

It is very important that the tool rotates in the correct direction.and that the piece feed occurs in the direction contrary to direction of the spindle rotation.

C.6.2 Choosing a rotation speed

The operator must ensure that the right rotation speed has been selected and that the speed selected is proper for the tool fitted to the spindle.

C.7 Machine operation, guard selection and adjustment

Because of the variety of workings which can be carried out on vertical spindle moulding machines by using different spindles, toolholders and tools, no safeguard can be considered effective for all conditions.

Each job must be considered separately and the most practical protection for a particular job must be selected. The min. hole diameter on the table depends on the tool, the protrusion of the plates and the height at which the tool is set.

This can be achieved by using the reduction rings provided, in order to have the hole on the plane as small as possible, to reduce the risk that the workpiece during its passage on the hole, oscillates and jams into the tools.

The guard must enclose the tool to the greatest extent according to the type of machining.

The distance between the guide halves must be sufficiently large to allow the tool rotation without contact.

If a removable feed is used, the tools must be covered and no entrapment must be created.

If the conveyor is not used, set up the pressers to form a tunnel, in which the piece can be introduced. These pressers must be used to work with the spindle moulder guide.

It is necessary to reduce the space between the two half-guides and the tool to a minimum.

To do this, you can use a continuity table.

C.8 Milling at the hood guide; machining on the entire piece length

To hinder the access to the tool during the milling at the hood-fence unit, it is necessary to use together with the fence a removale feeder with proper guards or vertical and horizontal pressure shoes eqipped with contact elements according to the workpiece size.

The following piece may be used to push the previous one; the last workpiece is milled at the end by using a pusher.

In case of thin pieces only the vertical pressure shoe may be used if its thickness is proper.

C.9 Non-through milling

To hinder the access to the tool during the not-through milling (interrupted milling) it is necessary to use together with the hood-fence unit a removable feeder or guards equipped with proper pressers according to the piece dimensions.

To hinder kickback of the piece use front and rear stops which are fastened to the fence, to the table or to the table extension.

We recommend to use a clamping template unless the piece may be hold in a safe way by the hands.

For clamping the piece use fast locking devices which operate with levers or cams.

C.10 Milling at the spindle

To hinder the access to the tool during the milling at the spindle use the proper guard and a clamping template.

C.11 Chamfering

To hinder the access to the tool during the oblique milling, besides the hood-fence unit use a special template or an auxiliary stop.

C.12 Concord milling

When possible it is necessary to avoid the clim milling.

C.13 Tenoning

To ensure a safe piece guidance to the tool, it is necessary to use the proper additional table foreseen by the manufacturer as well as the tenoning hood.

2.16 Emergency conditions

DANGER

In the case of flooding of the room where the machine is housed, disconnect the electricity supply immediately. Before starting work, have the machine checked by a specialised technician.

DANGER

in case of fire, immediately disconnect the electrical power supply and intervene using suitable fire extinguishers directing the jets at the base of the flames. Do not use water to put out the fire. Even if the machine has suffered no apparent damage, before restarting work have the machine checked by a specialised technician.

DANGER

if there is a mechanical block follow the following instructions to release the machine safely:

- **disconnect the machine electrically and pneumatically (if there is also a pneumatic supply).**
  1 - to isolate the machine electrically turn the main electrical switch to the "0" position and padlock it or disconnect the power supply cable (socket T) from the plug S (see Par. " Safety during maintenance");
  2 - disable the UPS, should one be installed on the machine;
  3 - to isolate the machine from its pneumatic supply, rotate the lever at the pneumatic circuit inlet and padlock it).
- **contact the manufacturers SERVICE (Par. "Technical support").**

A free space without obstructions must be provided around the machine (see par. "Work area"), to allow fast escape in case of danger.

This machine must not be operated in explosive environments.

2.17 REMOVAL - STORAGE - SCRAPPING

When removing the machine disconnect it from the electrical power supply and follow the instructions in the lifting paragraphs.

In case of extended inactivity of the machine, disconnect it from the electrical system. Thoroughly clean it, as already described for ordinary cleaning, and coat the work and sliding tables and the tool holder spindles with anti-rust protection. Do not store the machine in humid environments and protect it from atmospheric agents.

The machine is manufactured with non-toxic or harmful materials; in case of scrapping separate the ferrous materials from the plastic materials and scrap respectively.

2.17.1 Dismantling the device

The machine is manufactured with non-toxic or harmful materials; in case of scrapping separate the ferrous materials from the plastic materials and scrap respectively. We recommend contacting a specialised and authorised company, in compliance with the applicable laws and standards.

The operators moving the machine and the maintenance personnel must wear the IPE required for the risks involved with the type of use and in compliance with the applicable laws and standards.

To move and transport the machine refer to the instructions in chapter "Installation" .

3 Safety and emergency stop devices

3.1 Arrangement and description of emergency devices..... 40
3.2 Arrangement and description of safety devices..... 42

3.1 Arrangement and description of emergency devices

Emergency equipment consists of special devices whereby operators can promptly stop the machine if necessary or in case of danger.

DANGER

Emergency devices must never be removed or disconnected for no reason whatsoever.

Description

A	Emergency push-button
	On the control panel (A)
	On the front support bar (B) OPT
	it causes an immediate emergency stop.

SPECIALISED PERSONNEL

Periodically, check that the devices, listed above, are efficient.

DANGER

, who will put the machine out of service and call the electrical, mechanical maintenance personnel or the SCM Support Service.

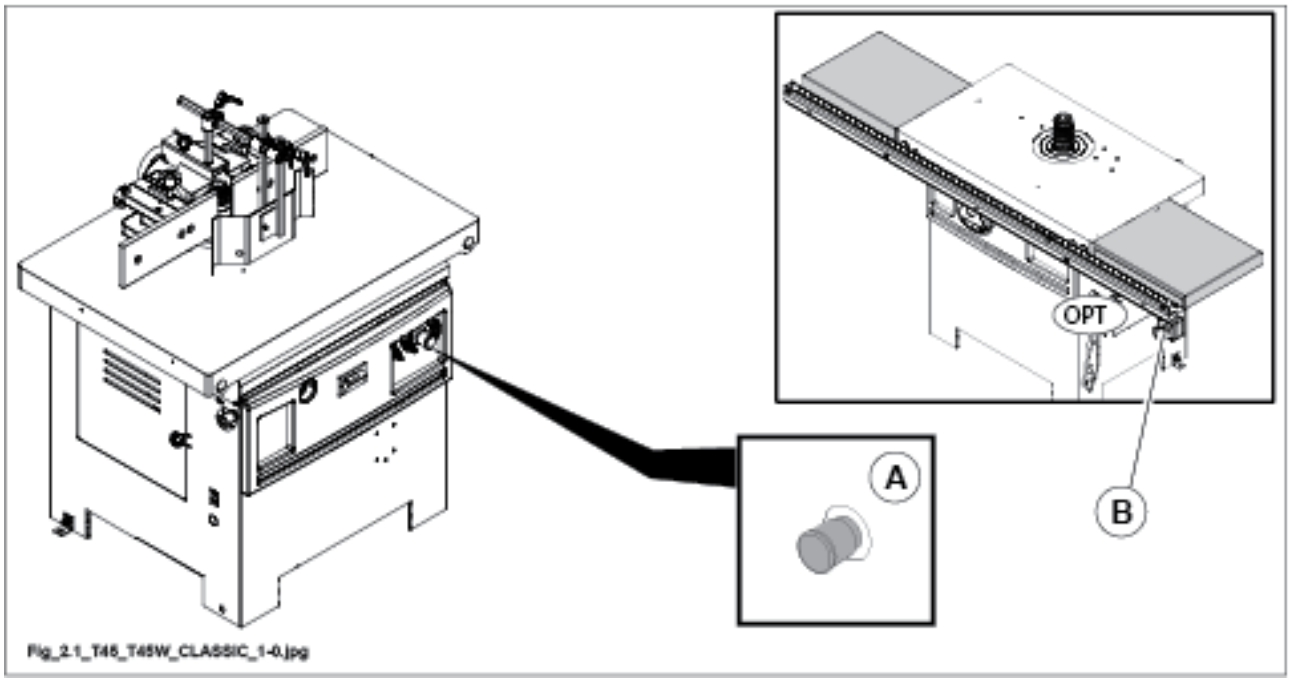
OPT
A
B
Fig_2.1_T45_T45W_CLASSIC_1-0.jpg

3.2 Arrangement and description of safety devices

Safety devices are special accident-prevention guards whereby the machine is protected against possibly dangerous situations.

DANGER

Safety devices must never be removed or disconnected for no reason whatsoever.

Description

	Electronic brake BLOCK WARNING LIGHT
D1	"Yellow light" warning light on (braking time longer than 14 s.). The electronic brake is in BLOCK. "Yellow light" warning light flashing (braking time between 10 and 14 s.). to resolve the fault indicated by the "yellow light" warning light see Par. " Problems - Causes - Solutions".
Limit switches:	Limit switch fitted to the spindle motor housing door It commands the machine stop when the door R is open.
Guards:	
1P)	Guard for tenoning operations (OPT) (only for TW 45c version)
3P)	Guard for shaping at the spindle.
5P)	Hood-fence unit for profiling operations
6P)	Presser unit fitted to the hood-fence unit
Suction hood under the table	

PROHIBITED

DO NOT use the machine without having first checked that the safety protections have been installed correctly and secured with the devices required and in the way indicated in this manual. Before every use, with the machine off and tools stopped, try to move the protection to ensure it is installed correctly and fixed completely.

SPECIALISED PERSONNEL

Periodically, check that the devices, listed above, are efficient.

DANGER

Any anomalies found during the control of these devices, must be reported promptly to the manager , who will put the machine out of service and call the electrical, mechanical maintenance personnel or the Support Service.SCM.

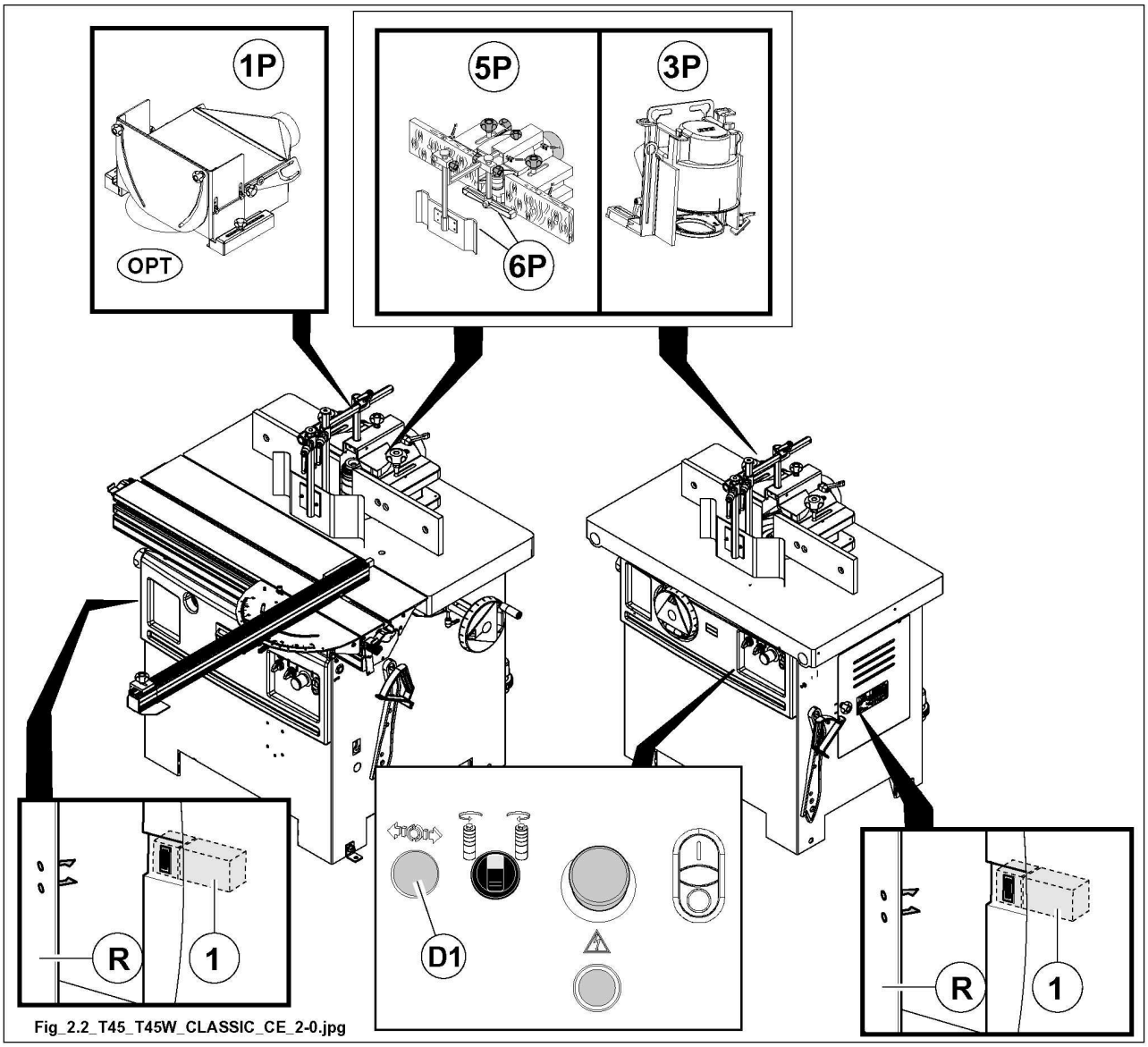

Fig_2.2_T45_T45W_CLASSIC_CE_2-0.jpg

4 Technical specifications

4.1 Dimensions of workpiece to be thicknessed..... 46
4.2 Technical data..... 48
4.3 Standard accessories..... 50
4.4 Optional accessories..... 51
4.5 Noise levels..... 52
4.6 Dust emission..... 53
4.7 Encumbrance dimensions..... 54
4.8 Work area..... 56

4.1 Dimensions of workpiece to be thicknessed

DIMENSIONS OF WORKPIECE TO BE MACHINED			
Thickness	Min. piece size in case of profiling operation	8	mm
Width	Min. piece size in case of profiling operation	8	mm
Length	Min. piece size in case of profiling operation	400	mm
Thickness	Max. piece size in case of profiling operation	230	mm
Width	Max. piece size in case of profiling operation	180	mm
Length	Max. piece size in case of profiling operation	900 (*)	mm
(*) In case of longer pieces use rest tables			
Thickness	Min. size of solid wood piece in case of tenoning	20	mm
Width	Min. size of solid wood piece in case of tenoning	20	mm
Length	Min. size of solid wood piece in case of tenoning	220	mm
Thickness	Max. size of solid wood piece in case of tenoning	100	mm
Width	Max. size of solid wood piece in case of tenoning	140	mm
Length	Max. size of solid wood piece in case of tenoning	900 (**)	mm
(**) In case of longer pieces use rest tables			
Work capacity in the centre of the spindle moulder: see figure			
Max. slot depth		100	mm

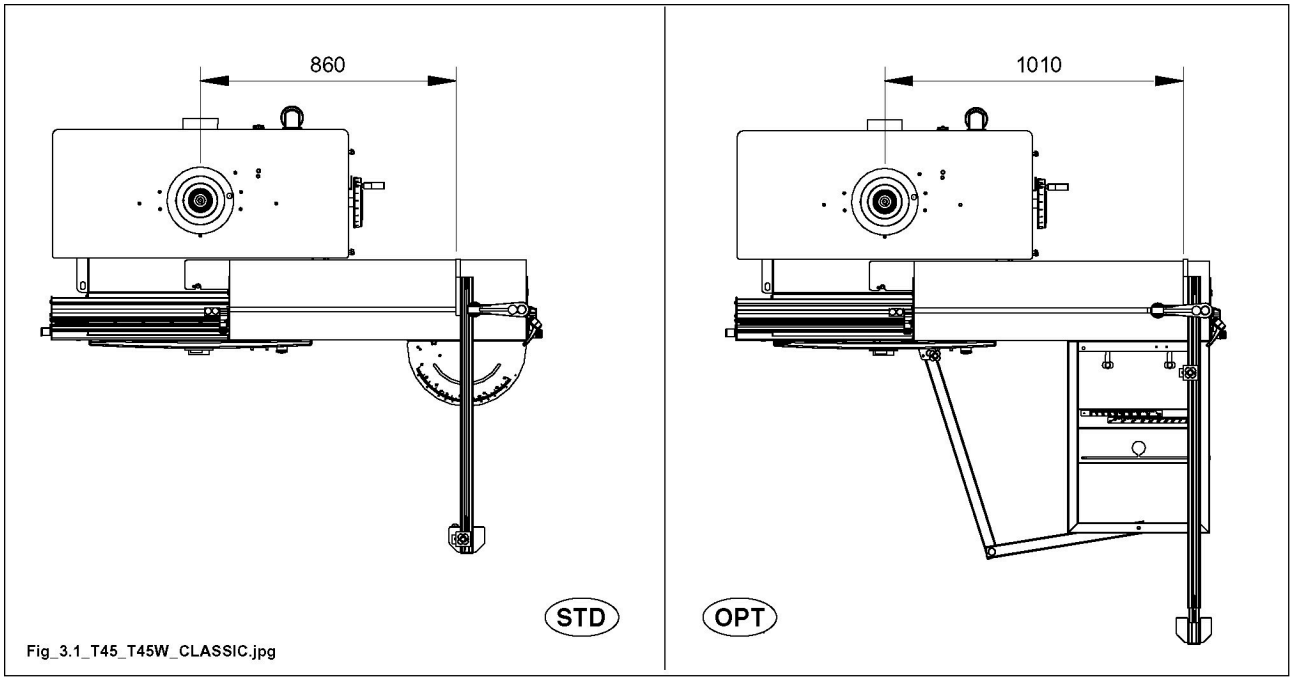

Fig_3.1_T45_T45W_CLASSIC.jpg

4.2 Technical data

GENERAL TECHNICAL SPECIFICATIONS			
Dimensions of the worktable – (T 45c) – (fixed spindle)		1000 x 575	mm
Dimensions of the worktable – (TW 45c) - (tilting spindle - 90° ÷ 45° (OPT))		1000 x 435	mm
Sliding table dimensions – (TW 45c)		1000 x 270	mm
Worktable height from the floor:		860	mm
Spindle useful height (fixed)	Ø 30 - 32 - 35 - 40 - 50	100	mm
Spindle useful height (interchangeable (OPT))		90	mm
Max. tool diameter for profiling (with perpendicular spindle)		Ø 210	mm
Max. tool diameter for profiling (with tilting spindle (OPT))		Ø 150	mm
Max. tool diameter: shaping hood	with Ø 30 mm spindle	Ø 120	mm
	with Ø 32 mm spindle	Ø 120	mm
	with Ø 35 mm spindle	Ø 120	mm
	with Ø 40 mm spindle	Ø 160	mm
	with Ø 50 mm spindle	Ø 160	mm
Max. tool diameter: tenoning hood Ø 275 (OPT)		Ø 275	mm
Max. tool diameter retractable under the table (90°) – (T 45c)		Ø 180 x h 40	mm
Max. tool diameter retractable under the table (90°) – (TW 45c)		Ø 180 x h 50	mm
Max. tool diameter retractable under the table (45° - (OPT)) – (TW 45c)		Ø 140 x h 50	mm
Vertical spindle adjusting:		~ 120	mm
Spindle stroke (45° - (OPT))		~ 80	mm
Spindle rotation speed (50 Hz)	3500 - 7000 - 10000		r.p.m.
Time required to stop the spindle:		less than 10 seconds	
Motors			
Main motor power:	50 Hz	5.0	kW
Technical Data: see motor identification plate			
Type of service: S6 – 40% (exempt from energy efficiency restrictions set out by regulation (EC) 640/2009) Terms of service: see paragraph " Environmental conditions"			
Basic machine weight: see identification plate on the machine			
Voltage and frequency of operation see identification plate on the machine			

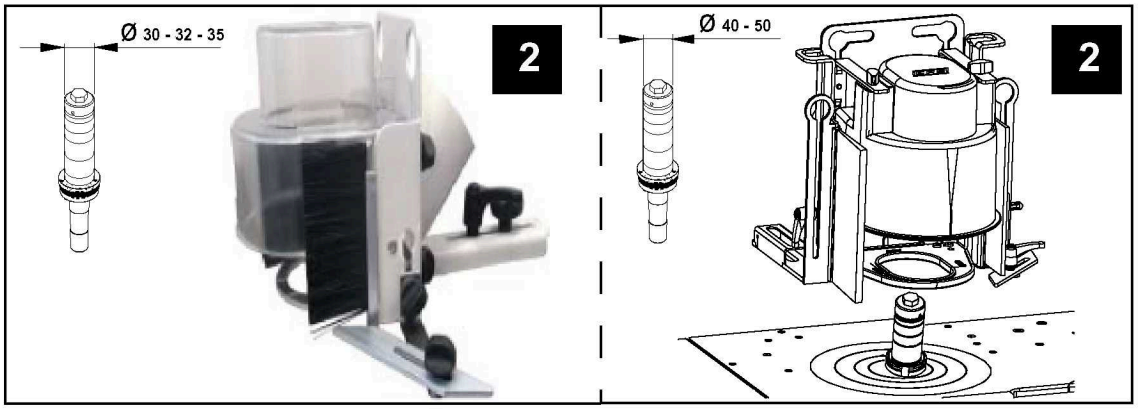

Fig_3.2_LAB_300P_1-0.jpg

DANGER

table lists the tool mass allowed according to its speed and diameter.

3500 (r.p.m.) (50 Hz) – 4200 (r.p.m.) (60 Hz)	
Diameter (mm)	**Weight (Kg)**
275	**4**

EXTRACTION TECHNICAL SPECIFICATIONS		
Spindle moulder lower extractor outlet diameter (OPT)	Ø 120	mm
Spindle moulder hood extractor outlet diameter	Ø 120	mm
Tenoning hood extractor outlet diameter (OPT)	Ø 120	mm
Extractor air speed: dry shavings (humid shavings)	20 (28)	m/sec
Extraction air consumption [1 Ø 120]	814 (1140)	m³/h
Vacuum during profiling inside the spindle moulder hood [n.1 Ø 120]	1543 (3024)	Pa

Shaping hood extraction outlet diameter (2)	Ø 80	mm
Shaping hood extraction outlet diameter (2)	Ø 120	mm
Extractor air speed: dry shavings (humid shavings)	20 (28)	m/sec
Extracion air consumption [Ø 80]	362 (507)	m³/h
Extracion air consumption [Ø 120]	814 (1140)	m³/h
Vacuum in moulding of the spindle moulder hood outlet [Ø 80]	160 (314)	Pa
Vacuum in moulding of the spindle moulder hood outlet [Ø 120]	360 (706)	Pa

4.3 Standard accessories

- Manual mouvement of the spindle
- Main motor direct start up
- Adjustable hood-fence unit
- Shaping spindle hood
- *) Pressers unit guard for milling at the fence
- *) Guard for milling at the spindle

  *) Accessories supplied to be used according to the working.
- Set of distance rings for moulding spindle

Switch with electronic brake

Transformer for auxiliary circuit 110 V

Overload cutout protection

N° 2 Brackets (for anchoring the machine to the floor)

Wood pusher

Wood pusher handle

Set of tools and wrenches for use and maintenance

"T 45C" SPINDLE MOULDER

- Tool fastening device

"TW 45C" SPINDLE MOULDER

- Eccentric clamping arm
- Sliding table in aluminium alloy with sliding guides
- Device for angled cuts

4.4 Optional accessories

Motor power (single-phase) - S6 / 40%:

- ..... 2.2 kW - 50 Hz
- Anodised aluminium tables for spindle moulder guide
- Interchangeable moulding spindles

  Moulding spindles available:

  ° Ø 30 - Ø 32 - Ø 35 - Ø 40 - Ø 50 to ensure compatibility with the all the customer’s tool bores.
  ° Ø 30 mm, Ø 32 mm, Ø 35 mm, Ø 40 mm, Ø 50 mm - 3/4”, 1”, 1” ¼ , to adapt to the different tool bores in the customer's possession

- Hood- fence unit with:
  - movements displayed by mechanical numbering units
  - wooden fence halves with jointing element
  - extraction outlet Ø 120 mm
  - Ø max. tool 210 mm
- Rotation direction reversal
- Suction hood Ø 120 mm, on the rear frame side

"T 45C" SPINDLE MOULDER

- Side and front extensions

"TW 45C” SPINDLE MOULDER

- Lateral extensions
- Squaring frame with extension arm and extendable aluminium rule with stops
- Tenoning table and hood Ø 275 mm (Max. tool diameter 275 mm)
- 90° / 45° spindle tilting

4.5 Noise levels

DECLARED DISSOCIATED NOISE EMISSION VALUES in accordance with ISO 4871:1996

Operating conditions		Profile	(according to ISO 19085-1:2021, Attachment F)			
		Tenoning	(according to ISO 19085-1:2021, Attachment F)			
Description of sizes measured		Reference norm	Uncertainty K	Profile		Tenoning	
Lop: Level of sound pressure at operator position dB(A) and peak level [dB(C)]	Operator positions	EN ISO 11201:2010	2.5 dB	**VSA**	**LAV**	**VSA**	**LAV**
	INFEED			82	87 [105]	72	90 [113]
Lw: power of sound level emitted: dB(A)		ISO 3744:2010	2.5 dB	89	95	80	97
The maximum istantaneus noise level pressure is under 130 dB (C).							
VSA: idle working without suction			**LAV:** during operation				

DANGER

the measured sound levels are emission values and cannot necessarily be taken as safe workplace levels. Although there is a correlation between the emission levels and the exposure levels, this cannot be used reliably to determine whether or not further precautions are required. Factors influencing the actual level of worker exposure include duration of exposure, the characteristics of the workplace, other sources of emission (e.g. the number of machines installed and other adjacent machinery). The permitted exposure values may also vary from country to country. The user should take all this into account to improve evaluation of the associated risks and dangers.

Some factors which reduce exposure to noise:

- correct tool choice (see Par. "Tools that can be used")
- correct speed selection (where adjustment is possible);
- tool and machine maintenance
- correct use of hearing protection
- type of material machined.

4.6 Dust emission

DUST EMISSION	
Operating conditions – Work on the spindle moulder	
Reference norm: **BG-GS-HO- 05**	Dust emitted [mg/m^3]
Operator station	< 2



DANGER

HARD WOOD DUST IS HARMFUL.



PROHIBITED

DO NOT USE COMPRESSED AIR.



DANGER

the dust extraction hood must be connected to the extraction system. Work only with the intake system inserted.

4.7 Encumbrance dimensions

"T 45C" SPINDLE MOULDER

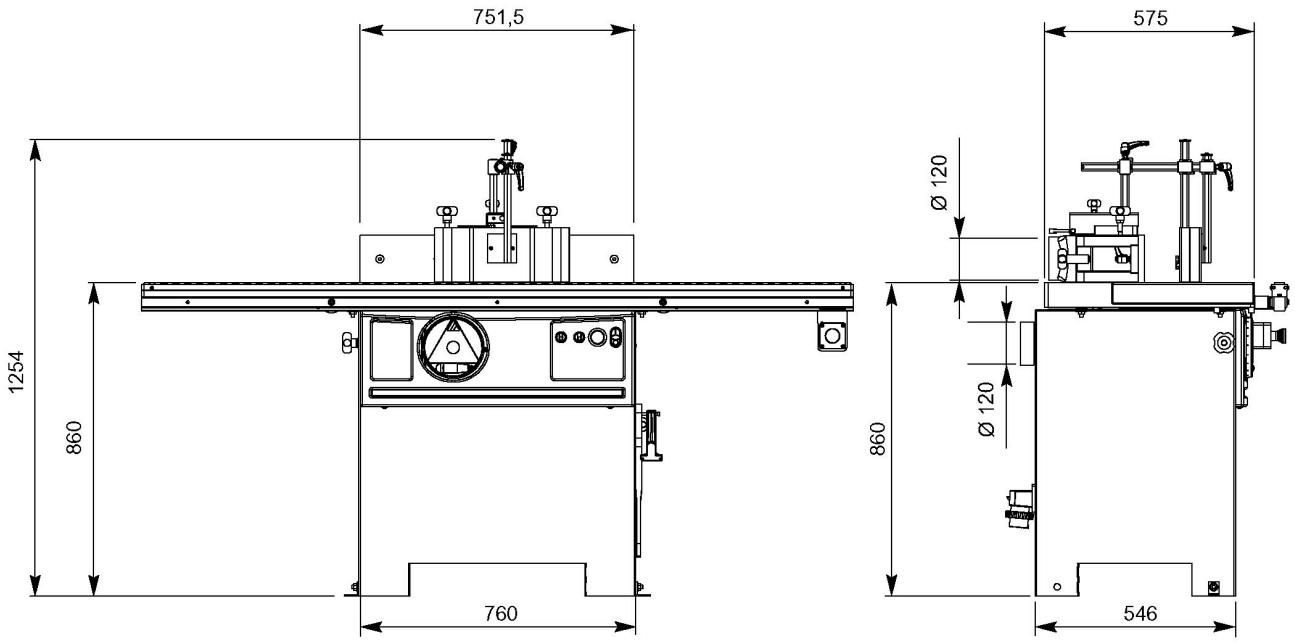

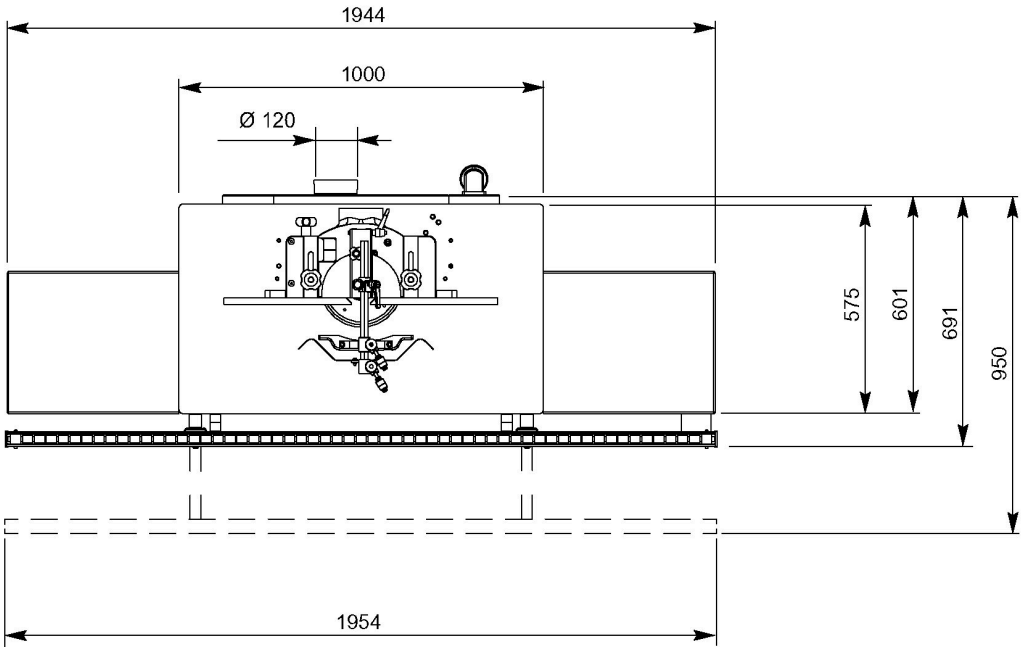

"TW 45C" SPINDLE MOULDER

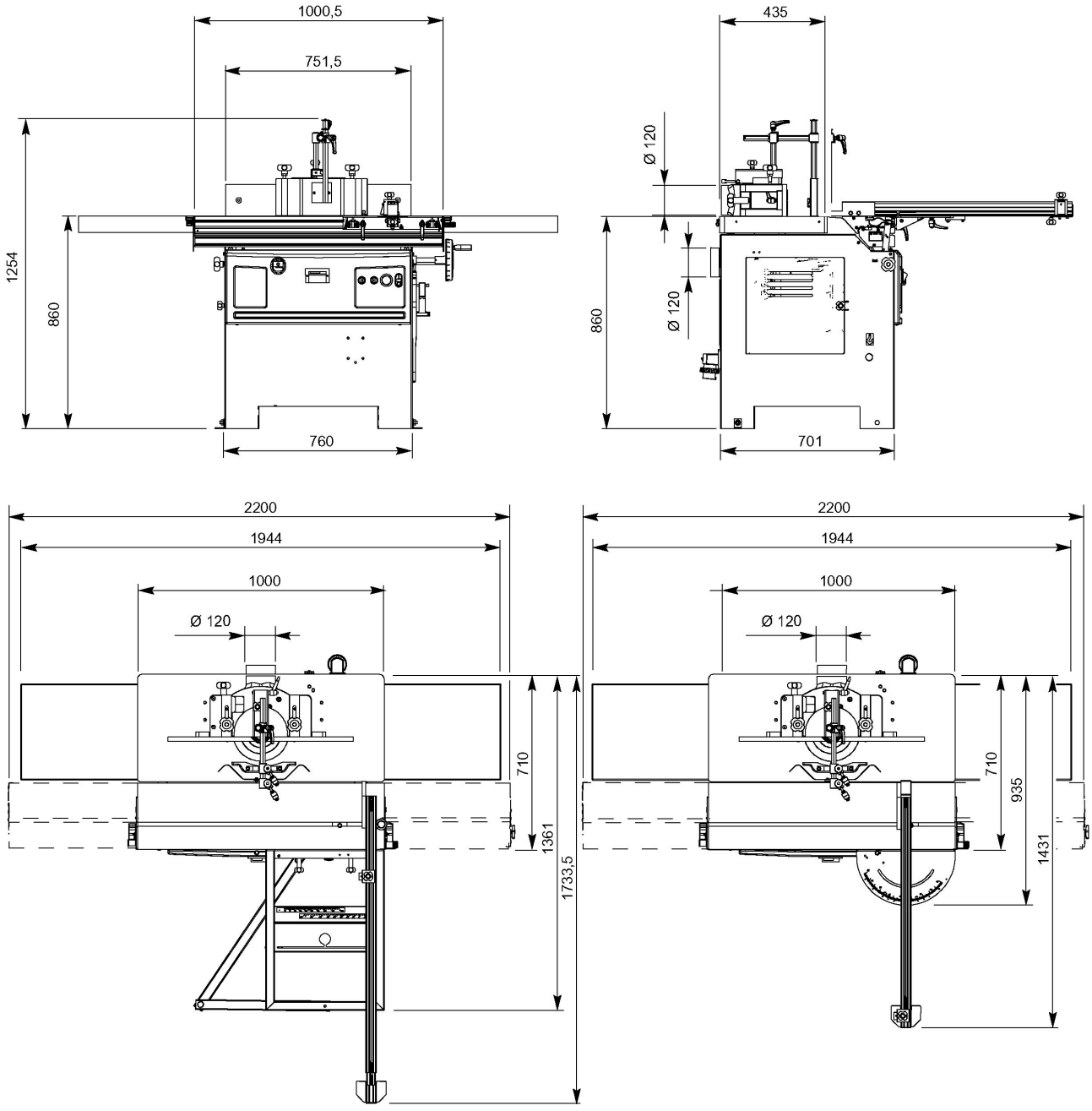

4.8 Work area

"T 45C" SPINDLE MOULDER

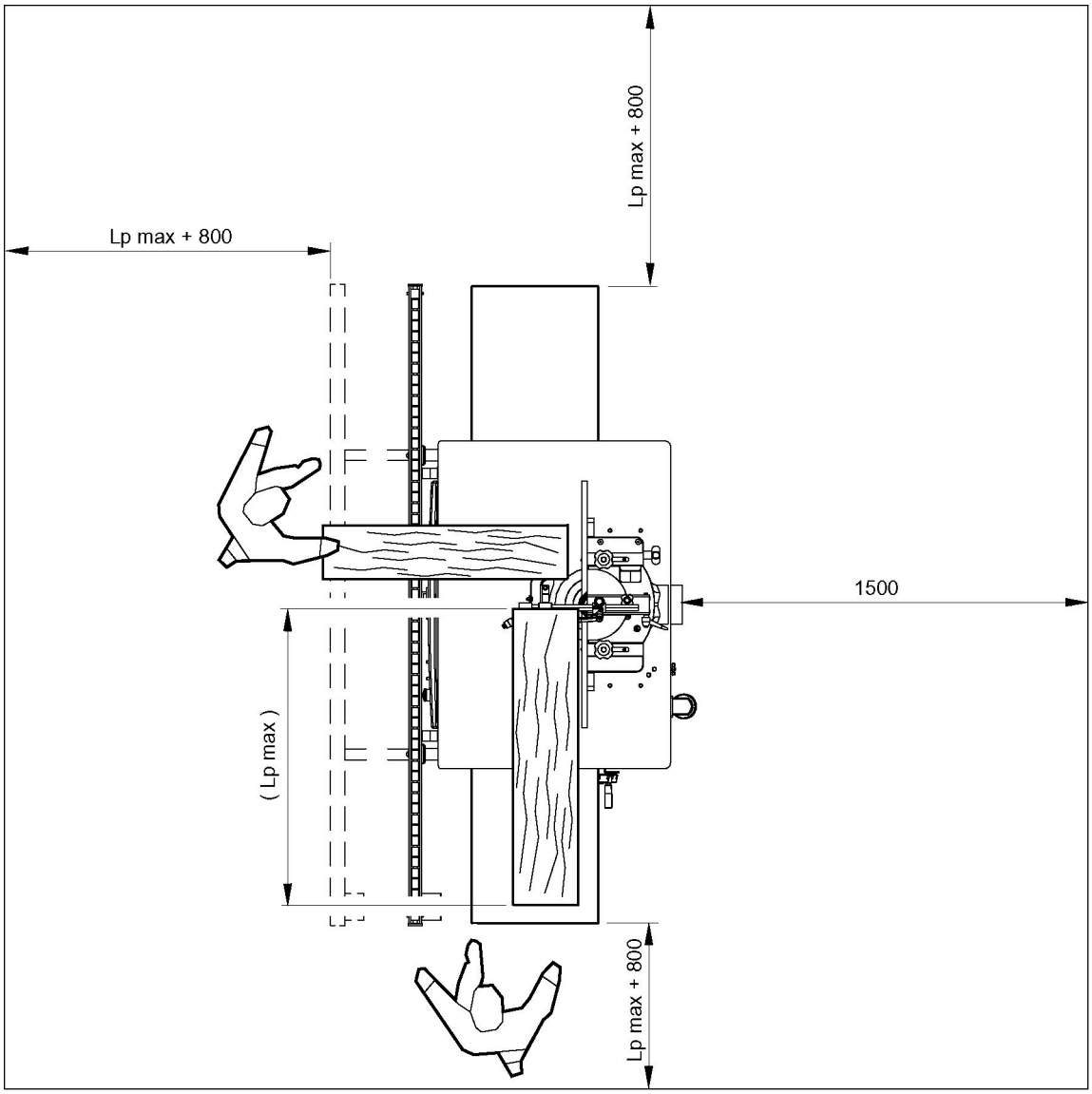

"TW 45C" SPINDLE MOULDER

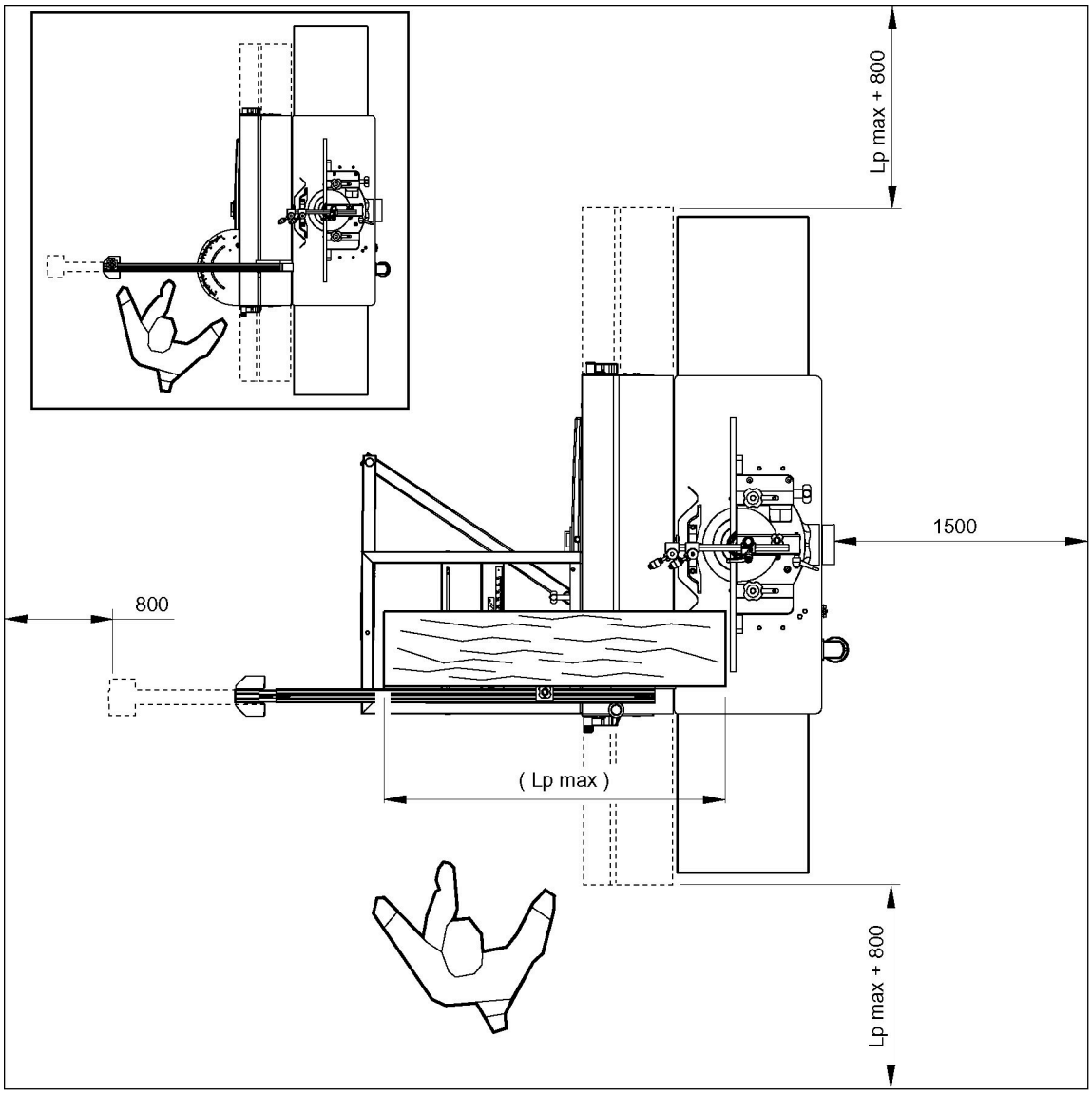

SPECIALISED PERSONNEL

The measures above indicated are to be considered as the free room of the working area.

SPECIALISED PERSONNEL

Lp max = Max. workpiece length.

DANGER

The machine is designed for use by one operator.

5 Installation

5.1 Unloading the machine 60
5.2 Positioning 62
5.3 Fitting parts removed for transport requirements 64
5.3.1 Fitting the supporting frame (OPT) 64
5.3.2 Fitting the rest rule 68
5.3.3 Device for angled cuts installation 69
5.3.4 Fitting the additional tables (OPT) 70
5.3.5 Fitting the additional tenoning table 71
5.3.6 Fitting the front rear rod (OPT) 72
5.3.7 Fitting guards 74
5.3.7.1 Hood-fence Unit 74
5.3.7.2 Tenoning hood-fence unit (OPT) 76
5.3.7.3 Guard for milling at the spindle 77
5.3.8 Fitting spindle 78
5.3.8.1 Interchangeable spindle (OPT) 78
5.4 Tool fitting - SAFETY NOTES 80
5.4.1 Tool fitting 82
5.5 Electrical installation 84
5.5.1 Requisites for the electricity supply system 84
5.5.2 Electrical power and earth connection 88
5.5.3 Checking the connection is correct 88
5.6 Connection to the suction system 90

5.1 Unloading the machine

NOTE

The machine package indicates:

- the weight to lift
- the hookup areas

DANGER

during loading and unloading, avoid knocks to prevent damages to persons or things. Make sure no one is standing under the overhung load and/or within the bridge crane working range during machine lifting and handling.

Before unloading the machine, remove all the parts used for transport or packaging.

DANGER

The machine must be unloaded with a crane or other lifting equipment by hooking the cables.

Ensure that the crane, cables or lift truck have a capacity equal to or greater than the weight of the machine.

During lifting avoid tearing or sudden movements.

As an alternative to the instructions above, the machine (when equipped with bases or pallets) may be lifted with a fork-lift truck by inserting the forks under the base and taking all precautions to ensure that the machine does not tip over.

If a bridge crane or a crane is available, proceed as follows:

- prepare the belts (C) of the same length and suitable capacity (minimum belt length 2000 mm);
- lift the slings and position them as is shown in the figure;
- fasten the slings to the bridge crane (D) having adequate lifting power;
- move the bridge crane by small steps to allow the slings (C) to settle, until optimum stability conditions are reached;
- lift carefully and slowly, without causing the load to swing, and place the machine in the selected setting.

NOTE

only for version with aluminium sliding table:

- If lifting with a hook, open the holes already prepared and indicated by the plate as shown in the figure.

If hoisting is carried out with a lift truck (A), proceed as follows:

- Provide a fork lift truck (A) having suitable carrying capacity;
- Insert the forks (B) as per the figure keeping them alongside the two feet (E) and check that these protrude at least 15 cm from the rear part of the base.

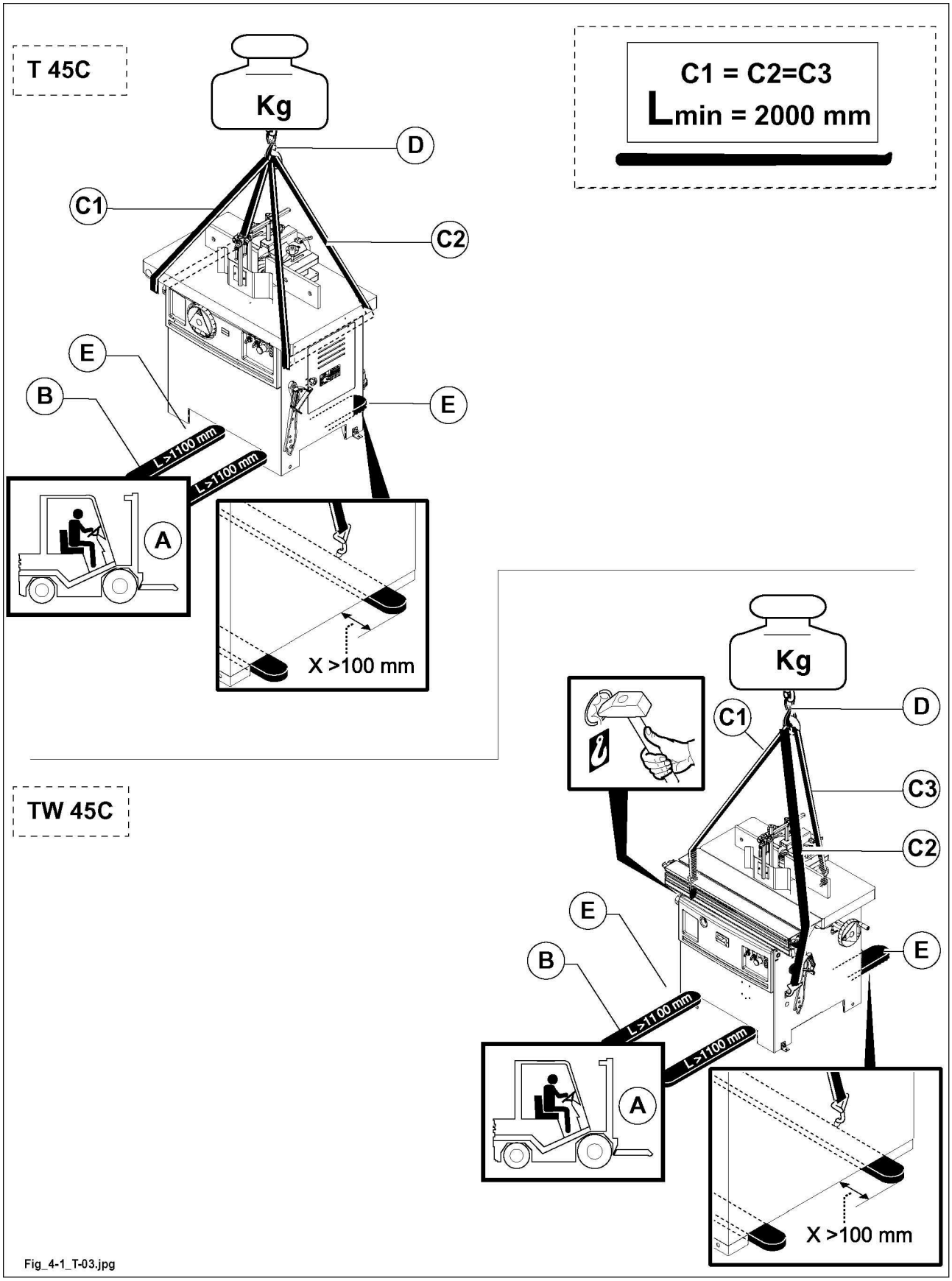

Fig_4-1_T-03.jpg

5.2 Positioning

Before positioning the machine take off the wood sockets from the machine feet.

The position where to install the machine shall be well lightened (at least 500 LUX), proper for the connection to the power line, to the suction system and for maintenance operations.



DANGER

During the machine positioning bear in mind that when machining long workpieces, there must be sufficient space to avoid creating possible crushing points against fixed parts of the location, such as walls, columns, etc. (see paragraph "Work area").

Check that the floor is solid enough to support the base at the contact points uniformly. We recommend a concrete flooring and do not recommend an asphalt flooring.

We recommend positioning steel plates between the feet and the flooring, with anti-vibration material, if necessary.



DANGER

it is strongly recommended that the machine is fixed to the floor. Fix the supplied angles B to machine feet A and fix on ground by means of expansion bolts C (not supplied).

Some machine parts are greased and oiled.

Before starting working carefully degrease the working areas as well as the guards with not dangerous solvent.

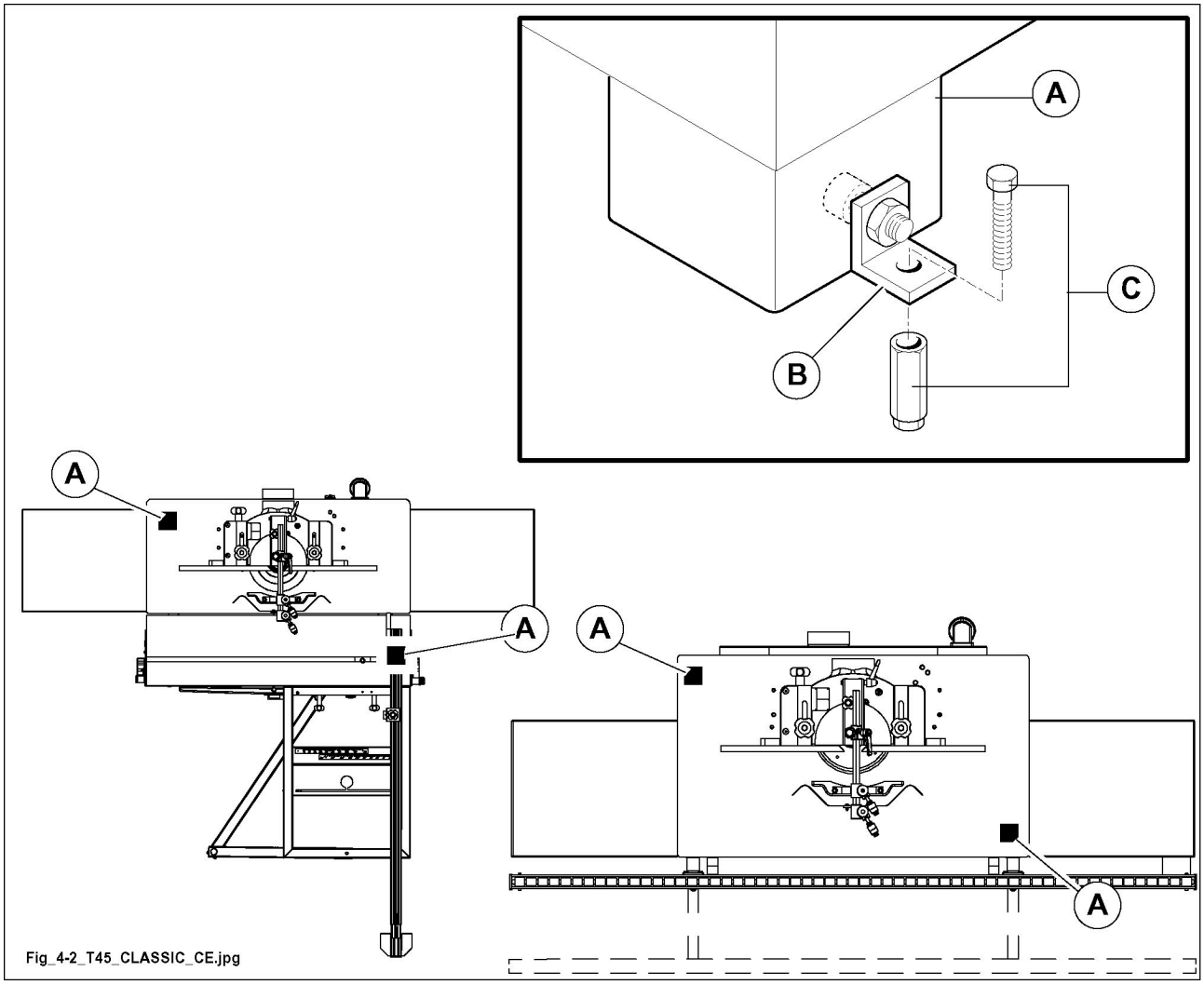
A
C
B
A
A
A
A
Fig_4-2_T45_CLASSIC_CE.jpg

5.3 Fitting parts removed for transport requirements

For packaging and transport reasons some parts are shipped unassembled.

DANGER

For fitting these parts proper equipment and 2 persons are required.

1. Stop the machine to carry out adjustments or to demount any machine, turn the main switch to zero and lock it, then indicate it by a sign.

Padlock keys must only be in the possession of the person carrying out the machine adjustment, maintenance or cleaning work.

5.3.1 Fitting the supporting frame OPT

Available only on the SPINDLE MOULDER model "TW 45c"

NOTE

for transport reasons the frame is demounted from the machine.

To assemble, proceed as follows:

1. Insert the support (B) in the front groove of the wagon (A).
2. Position the flag (R) as shown in the figure; rest the frame (D) on the support (B) inserting the two pads (H) in the front groove of the sliding table and the screw (F) in the hole (Y).

   NOTE

   The screw (D) must sit perfectly in the special hole underneath the frame (D).
3. Use a reference rule to level the table (D), if necessary, by using screw (F) through the hole (Y).
4. Tighten the knobs (C).
5. Insert the column (L) with the presser (M) in the groove of the slide carriage (A), and position it along the carriage where it is most convenient and rotate it clockwise to block it.

The table is already registered; to make further adjustments proceed as follows:

- loosen the knobs (C);
- loosen the screws (P) and use the grub screws (Q) to adjust the height.

NOTE

if the "Support Frame" device is requested at a later date, the operations described above must be preceded by the assembly of the flag assembly.

To assemble the "flag unit" proceed as follows:

1. Fit the flag holder (E) to the base using the holes (G) to fix it.
2. Tighten the screws (V) and constrain the position of the support (E) to the base, with the pins (Z).
3. Install the flag (R) on the support (E) and on the spacer (T) and insert the rotation pin (S).
4. Use the grub screws (O) for a first adjustment of the flag (R).
5. Then, assemble the support frame (D) as illustrated in the sequence (1 - 5) above.
6. Move the sliding table and check the smoothness and flatness of the flag unit. If the position of the flag (R) needs adjusting, act on the pin (S) using the screws (O).
7. Level the table (D), if necessary, with the screw (F).
8. Loosen the knobs (C); loosen the screws (P) and use the grub screws (Q) to adjust the height.
9. When the operation is finished, tighten the screws (P) and tighten the knobs (C).

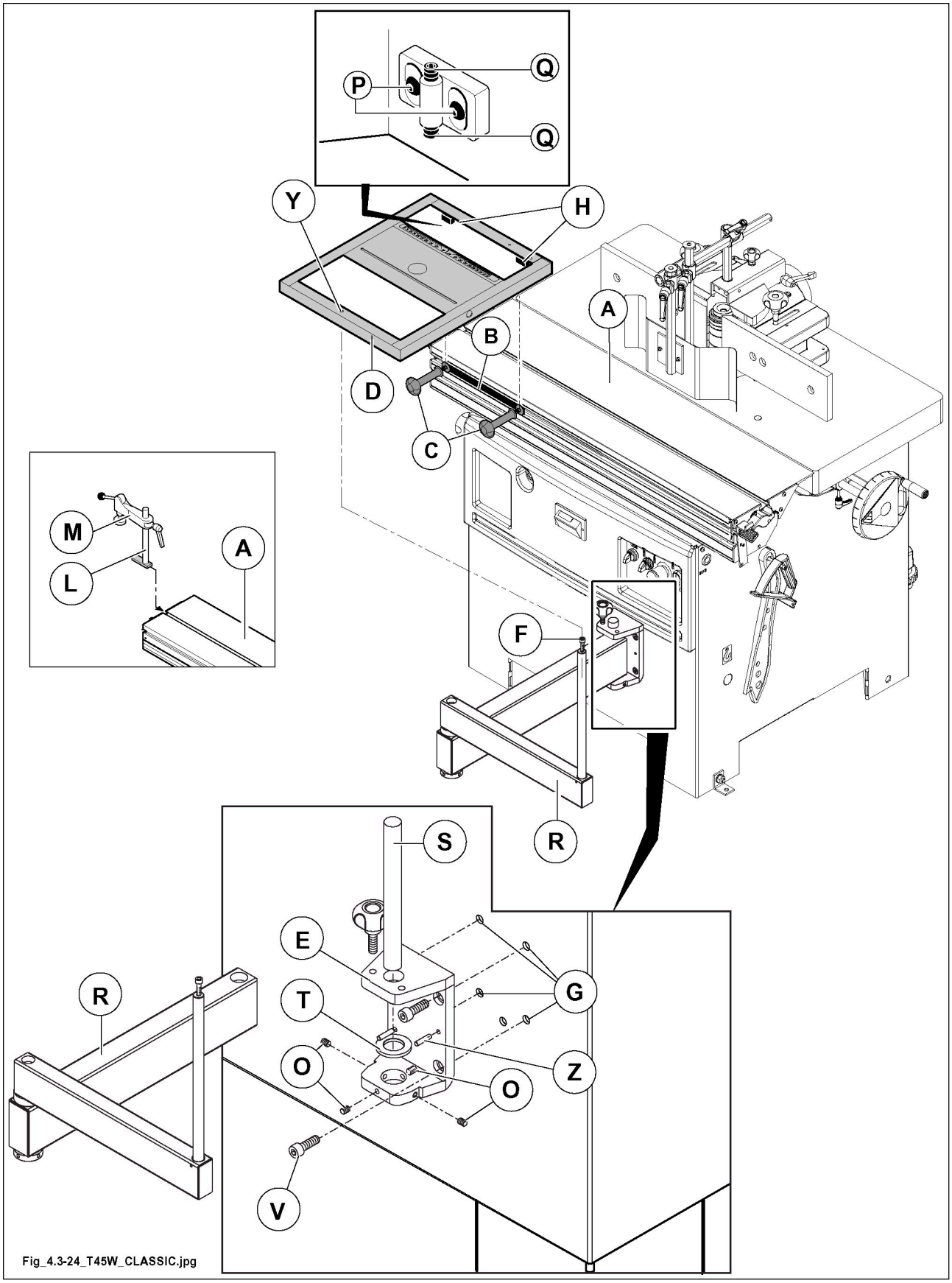

Fig_4.3-24_T45W_CLASSIC.jpg

Finally, proceed to assemble the graduated plates (A, B) as described below.

- Install the support rule (R), for cuts at right angles (0°), on side "1" of the support frame (see figure). If the telescopic rule is not positioned correctly at 90°, remove the cap (T) and use the adjustment screw (V) to position the telescopic rule correctly at 90°.
- Mark the position of the rule (C), e.g. with a pencil.
- Position the support rule (R), for cuts tilted at 45°, on side "1" of the support frame (see figure).
- Mark the position of the rule (D), e.g. with a pencil.
- Then take the adhesive plate (A), place it on the frame as shown in the figure, align the marks of 0° and 45° with the positions (C, D) marked previously on the frame and then fix it to the frame.

NOTE

after having positioned the support line on side "2" of the support frame, repeat the same operations listed above to mount the graduated plate (B).

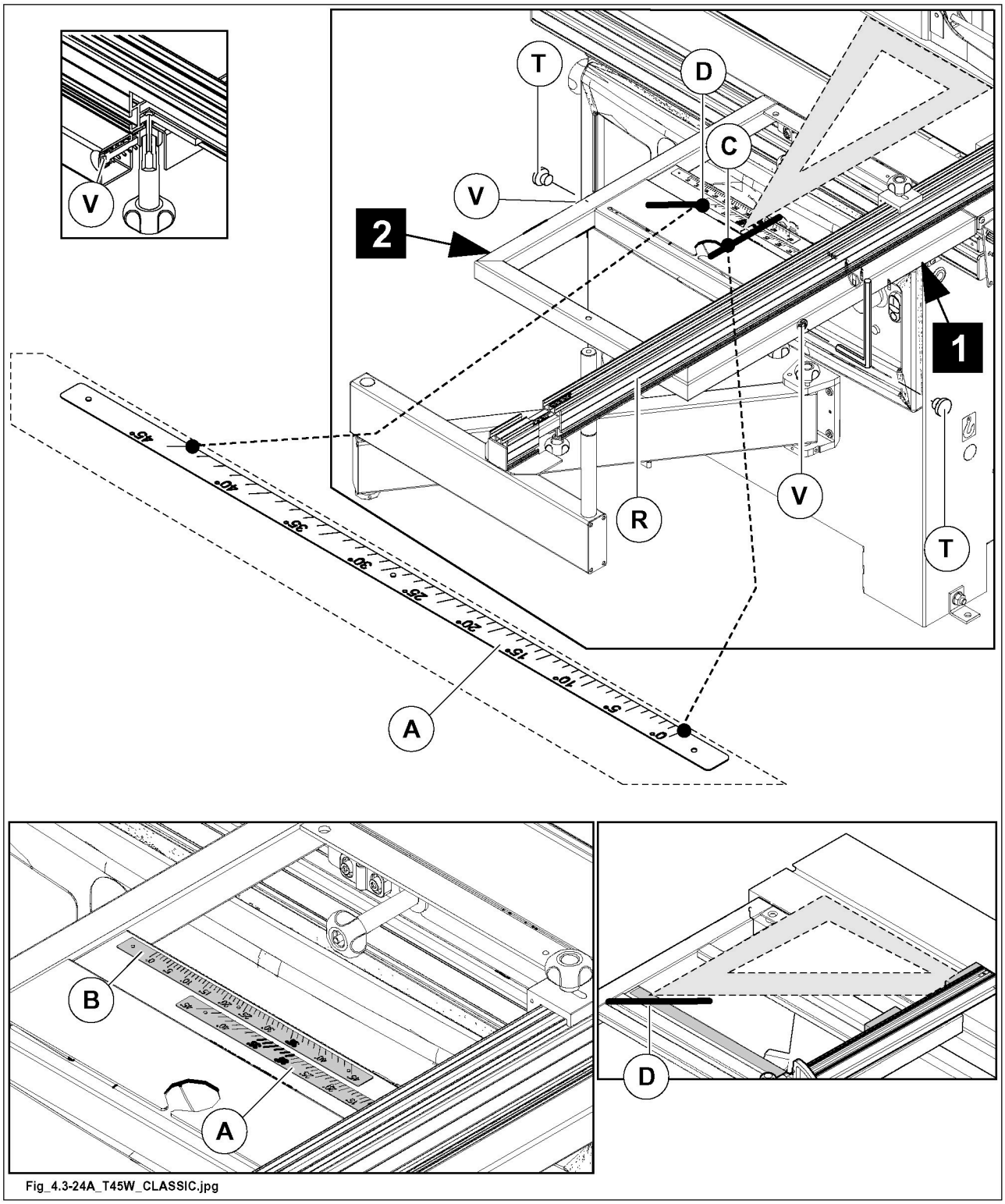

Fig_4.3-24A_T45W_CLASSIC.jpg

5.3.2 Fitting the rest rule

Available only on the SPINDLE MOULDER model "TW 45c"

Ⓐ - Installation for 90° cuts

1. Rest the telescopic rule on the table (A) inserting the fulcrum (C), located at the bottom of the rule, in the hole (R). Insert the knob (F) in the slot (T) through the hole (D).
2. Position the telescopic rule so that the pin (C) goes against the notch (L) inside the rule.
3. Position the telescopic rule so that the pin (E) goes against the device (S).
4. Tighten the knob (F).

Ⓑ - Installation for tilting cuts

1. Rest the telescopic rule on the table (A) inserting the fulcrum (C) (in the lower part of the square rule) in the hole (R) of the square frame. Loosen and insert the knob (F) in the slot (T) through the hole (D).
2. For use, position the ruler referring to the plate (P). Tighten the knob (F).

   The ruler is fitted with an extractable telescopic extension (H), which may be lengthened as required after loosening the knob (G). When the splinter guard (M) is worn, bring it up against the spindle moulder by loosening the two screws (N).

Ⓐ = Installation for 90° cuts	Ⓑ = Installation for tilting cuts

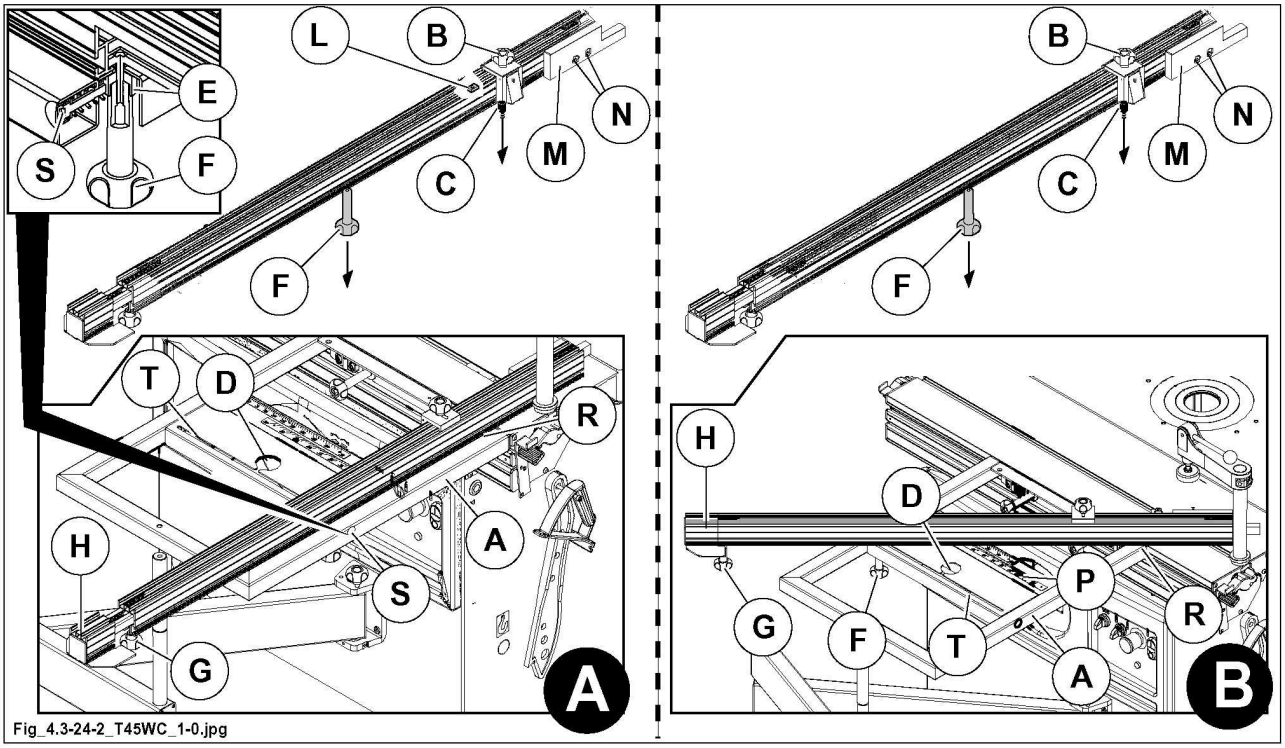

Fig_4.3-24-2_T45WC_1-0.jpg

5.3.3 Device for angled cuts installation

Available only on the SPINDLE MOULDER model "TW 45c"

Loosen the grub screw (1) and remove the lever (B).

1. Insert the column (N) with the presser (E) in the groove (3) of the sliding table.
2. Mount the rule assembly (A) inserting the gib (R) in the front groove (C) of the sliding table;
3. Tighten the levers (G) positioned under the tilting cutting device (4).
4. Release the handle (F).
5. Position the rule assembly at the right distance from the spindle moulder; at a 90° angle send the rule unit against the gib (L) positioned inside the groove at the bottom of the rule; the gib (L) is adjusted by our technicians and is used to quickly position the rule unit at the right distance from the spindle moulder.
6. To make angular cuts turn the ruler assembly (A) using index (D) as a reference.
7. Block by tightening handle (F).
8. Position the presser up against the ruler assembly ensuring that the washer (Q) is inserted into the groove.
9. Rotate the stud bolt (N) clockwise to block.

Reassemble the lever (B) and tighten the grub screw (1), making sure that it enters the hole of the pin (2).

The table is already registered; to make further adjustments proceed as follows:

- loosen the levers (G);
- use the grub screws (S) to adjust the parallelism to the sliding table;
- loosen the screws (T) and use the grub screws (U) to adjust the height.

When the splinter guard (M) is worn, bring it up against the spindle by turning the blocking screws.

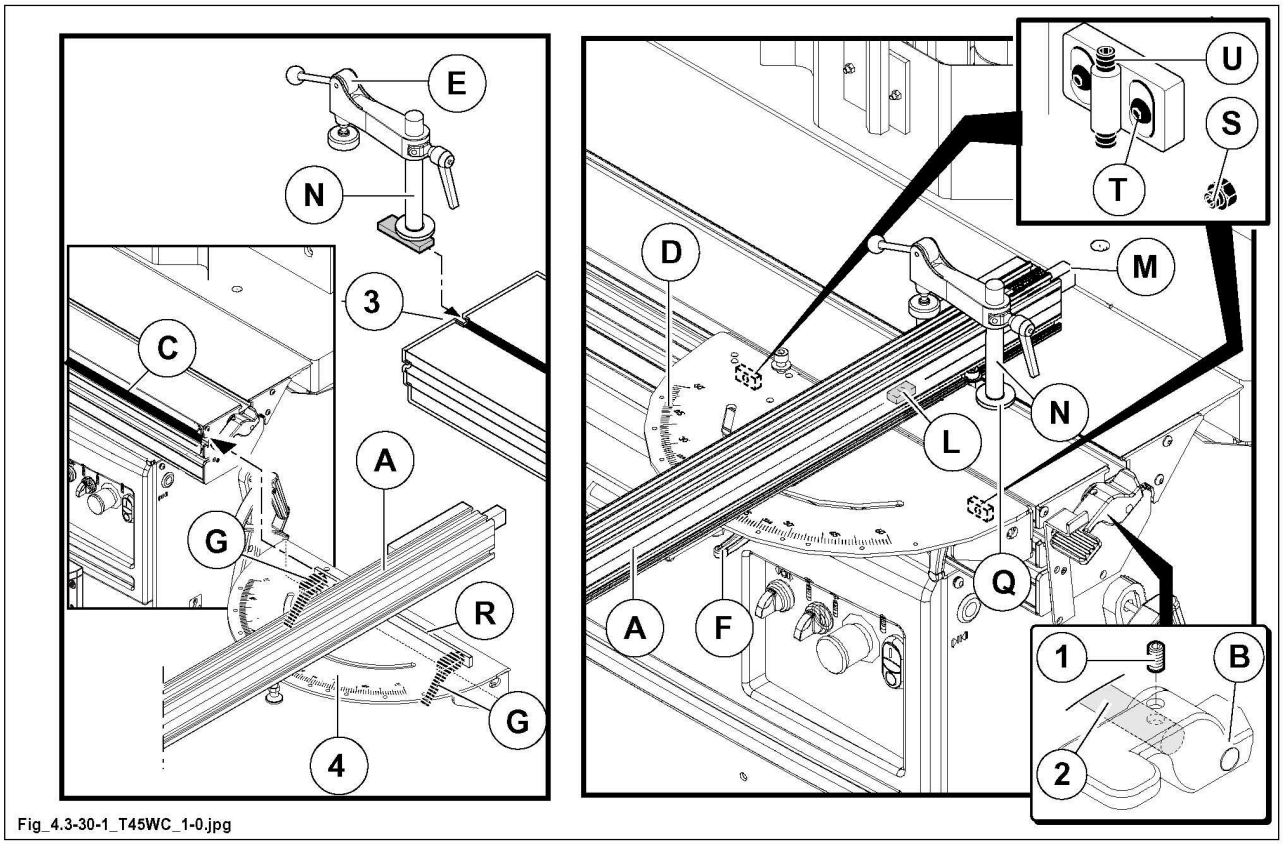

Fig_4.3-30-1_T45WC_1-0.jpg

5.3.4 Fitting the additional tables OPT

DANGER

All fitting and demounting operations require 2 persons.
They are used for profiling and rabbeting also large pieces.

- Fix the table (A) to the surface (B) using the screws (C) and align it perfectly with the surface (B) using the grub screws (D) (check alignment using a rule).

SPECIALISED PERSONNEL

in the model with sliding table and only with tilting spindle moulder it is necessary to open an opening on the side of the infeed table by detaching the sheet metal (L).

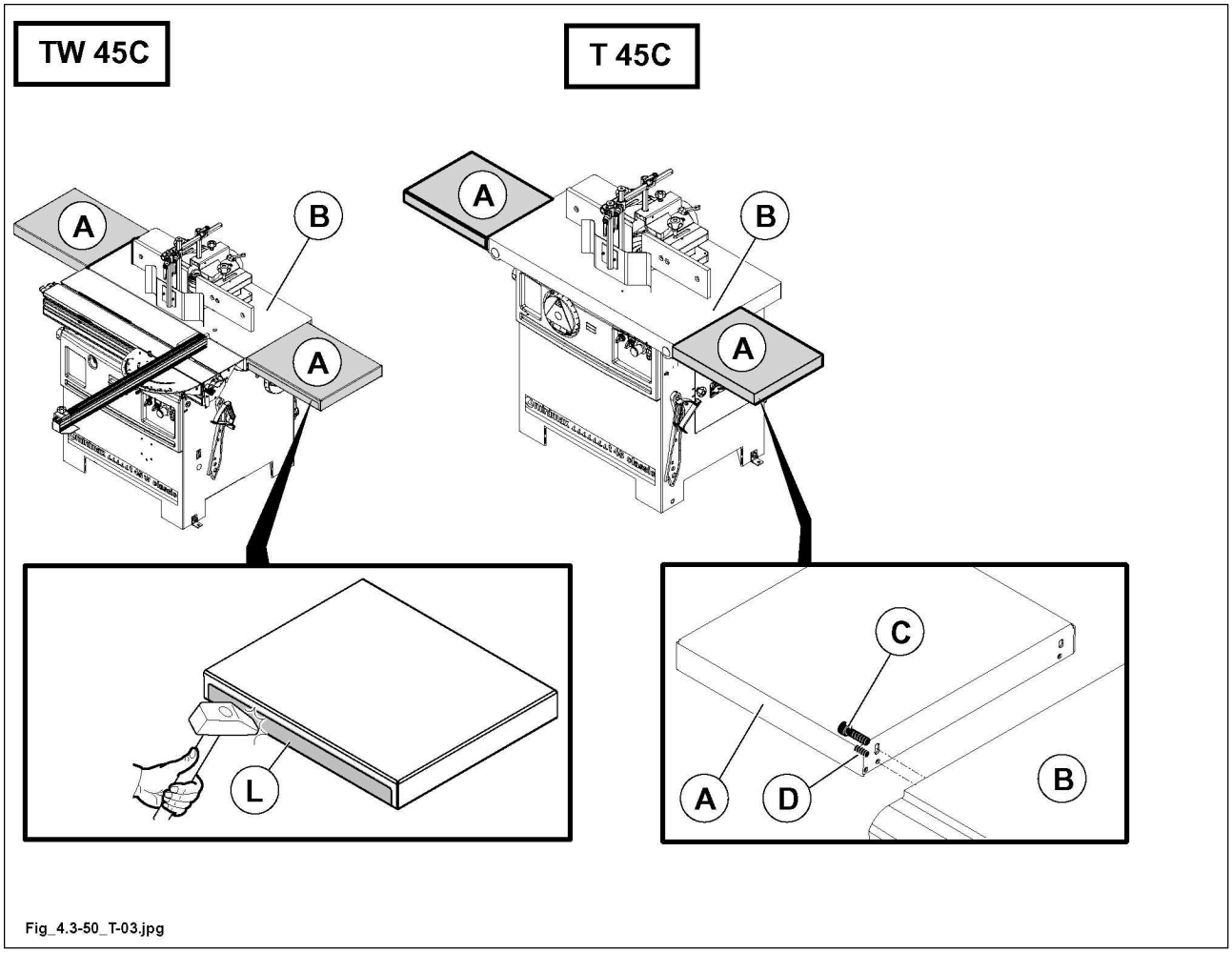

Fig_4.3-50_T-03.jpg

5.3.5 Fitting the additional tenoning table

Available only on the SPINDLE MOULDER model "TW 45c"

NOTE
for packaging and transport reasons some parts are shipped unassembled.

- Insert the gib (A) in the groove.
- Fix the tenoning table (C) on the square frame (D) or on the tilting cuts device (F), with the screws (E).

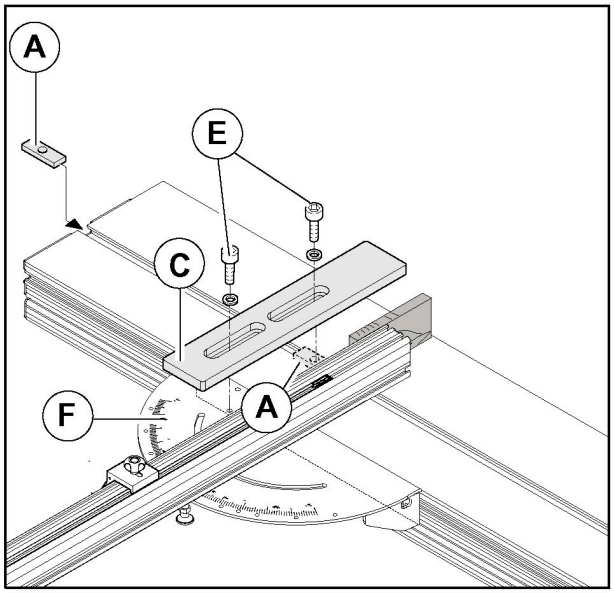

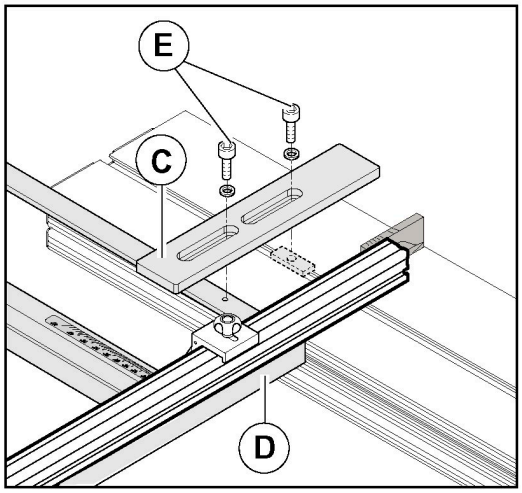

Fig_4.3-52_LAB_300_PLUS.jpg

5.3.6 Fitting the front rear rod OPT

Available only on the SPINDLE MOULDER model "TW 45c"

NOTE

for packing requirements the emergency button (E) may arrive not installed on the front extension (B). Install the emergency button (E) on the front extension (B) with the screws (F).

- Insert round bars (Z) into the holes of the front extension (B).
- Screw the screws (N) without tightening them.
- Insert round bars (Z) and front extension (B) into holes (1-2) of table (A).
- Install the limit switches (washer and screw) (X).
- Lock the movements of the front extension (B) by tightening the two knobs (M).
- By loosening the screws (V) of the adjustment plates (D) it is possible to raise or lower the front extension (B) until it is level with the table (A).
- Tighten the screws (V and N).

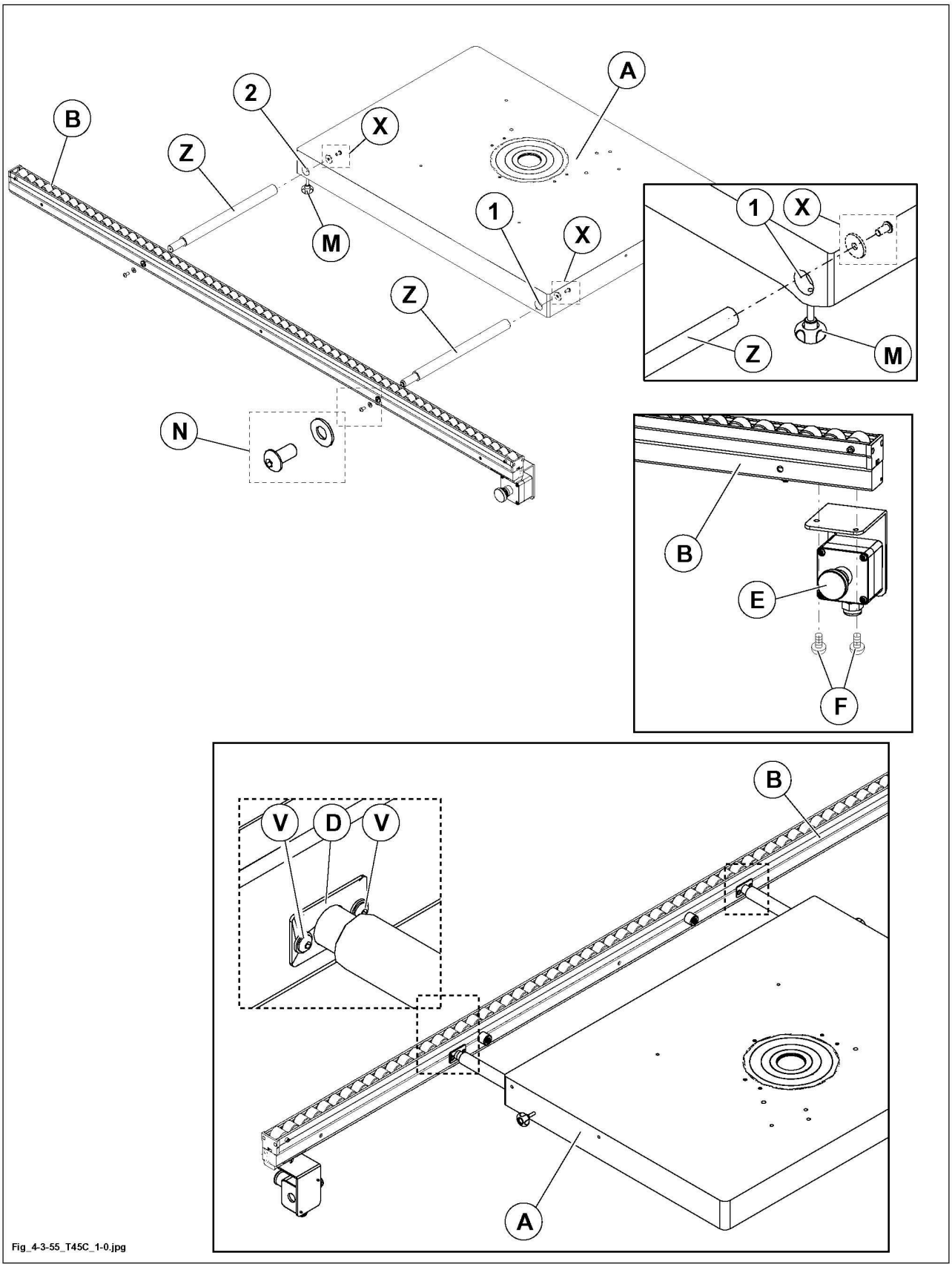

Fig_4-3-55_T45C_1-0.jpg

5.3.7 Fitting guards

DANGER

the protections must always be mounted and be positioned in such as way as to completely cover the tools.

DANGER

ensure that the fixing devices of the safety protections are kept clean and perfectly efficient in order to guarantee their correct assembly. Ensure that the fixing holes are clean, especially the blind threaded holes on the horizontal surfaces, that are more prone to fill with shavings and dust.

5.3.7.1 Hood-fence Unit

DANGER

to perform the profiling machining, (POSITION 1 - (STD)) install the spindle guide by screwing the knobs (B) in the holes (P) of the table.

To perform the head machining, (POSITION 2 - (OPT)) install the spindle guide by screwing the knobs (B) in the holes (T) of the table.

DANGER

It is forbidden to carry out dead cuts when the hood-fence unit is fitted for working at the front end (POSITION 2 - (OPT)).

Before starting the working adjust guards (Q - R - S) in order to protect the operator against eventual ejection of splints or tool parts.

DANGER

it is forbidden to work without the help of the protections (Q, R, S).

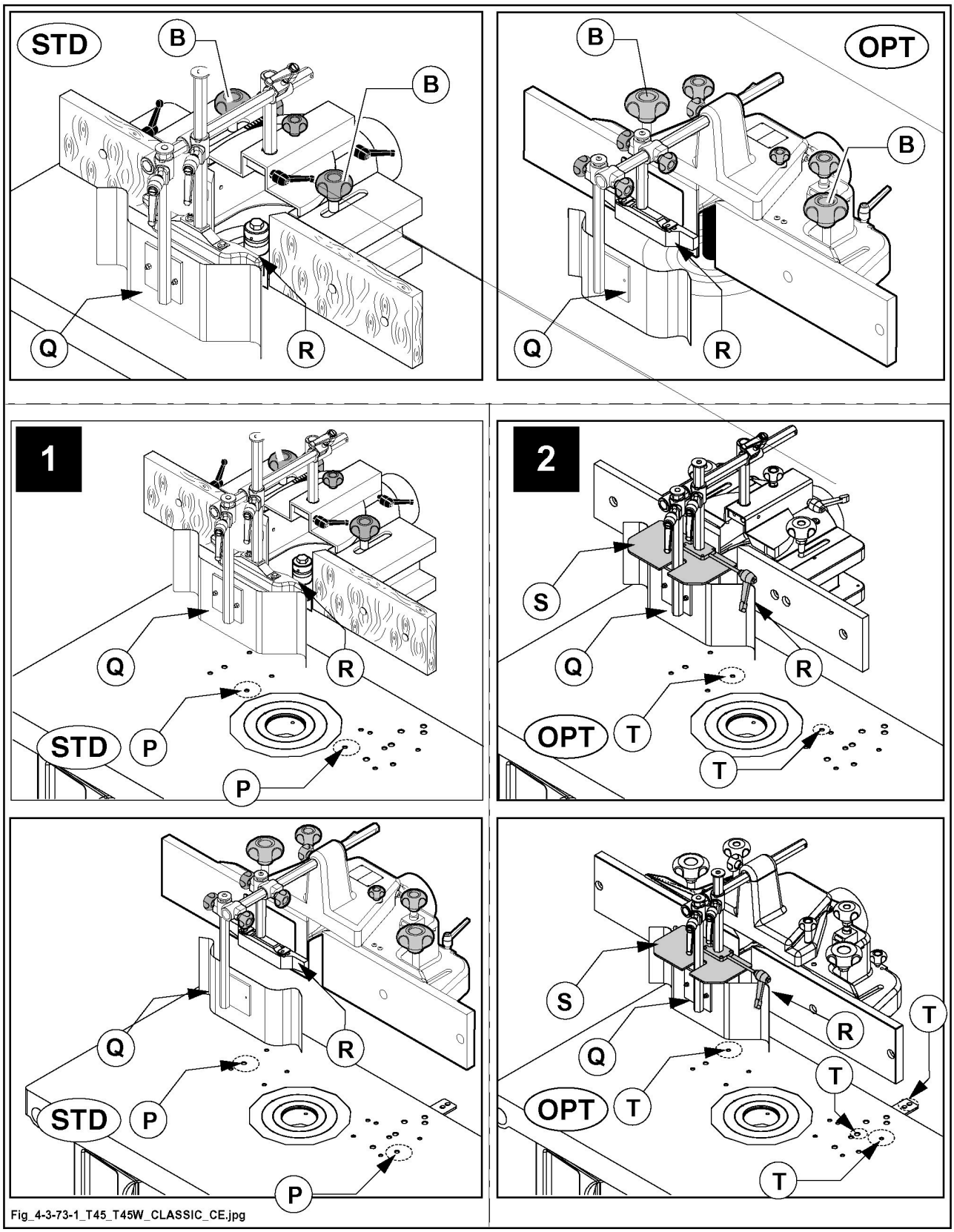

Fig_4-3-73-1_T45_T45W_CLASSIC_CE.jpg

5.3.7.2 Tenoning hood-fence unit OPT

Available only on the SPINDLE MOULDER model "TW 45c"
Rest the hood on the table in the correct position for the milling depth required, then fasten it by tightening the knobs (1).

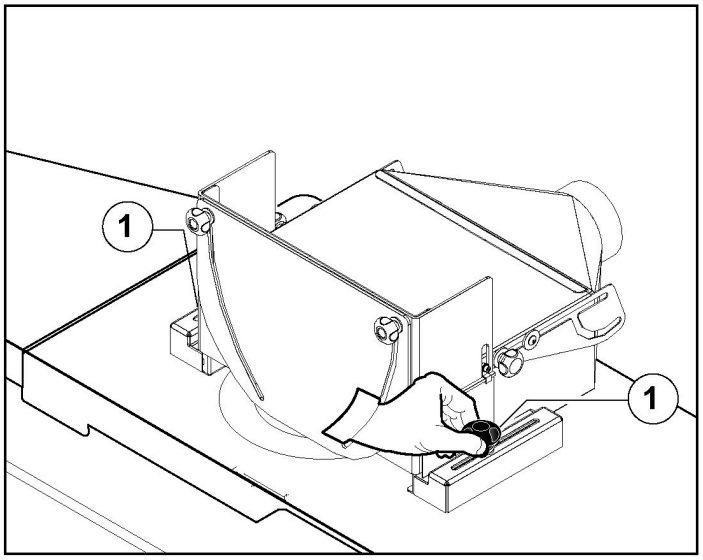

Fig_4-3-73-4_TI_105_PS_NOVA.jpg

5.3.7.3 Guard for milling at the spindle

Fit:

- guard (P) to the machine table by tightening handles (F).

DANGER

all adjusting operations are to be carried out with standstill spindle.

DANGER

before starting working manually turn the tool to make sure that there is no contact with the fixed parts.

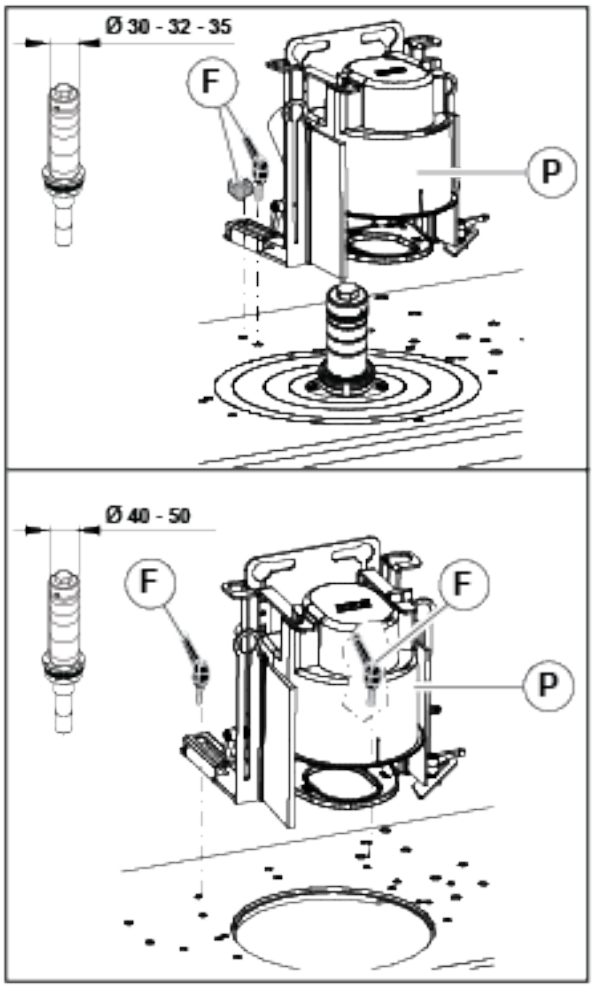

Fig_4-3-73-5_CU410ES_2-0.jpg

5.3.8 Fitting spindle

DANGER

all adjusting operations are to be carried out with standstill spindle.

5.3.8.1 Interchangeable spindle OPT

DANGER

take off or fit the interchangeable spindle when no tools are fitted to the spindle.

Always wear gauntlets when handling the tools.

Before performing any operation, cut off the electrical supply and disconnect the power supply cable (socket T) from the plug (S).

Proceed as indicated below:

- Move the moulder hood to free the worktable.
- Release the knob (A).
- Lift the spindle to the maximum height by turning the handwheel (B).
- Open the door (V) (it acts on a micro that prevents the motor start).
- Lock the rotation of the spindle by turning it manually until it is to locked with the accessory pin (C).
- Unscrew the ring nut (Q) counterclockwise with the wrench (P) until the spindle (O) can be extracted.
- Manually unscrew the ring nut from the spindle and screw it down to the new spindle so that it touches the rubber ring (R), then tighten the ring nut half turn.
- Make sure that the taper shanks (D) and the threads of the spindle and chuck are clean, free from dents and flat.
- Fit the new spindle by screwing it down to the rubber ring (R), clamp it by a half turn, then tighten the ring nut (Q) by turning the wrench (P) clockwise.
- Ensure the spindle can rotate freely by removing the pin (C).
- Close the door (V).

DANGER

at the end of the working before replacing the spindle, let it cool.

The correct use of the machine is a determining factor for maximum results.

It is important to comply with the maintenance operations indicated in this booklet.

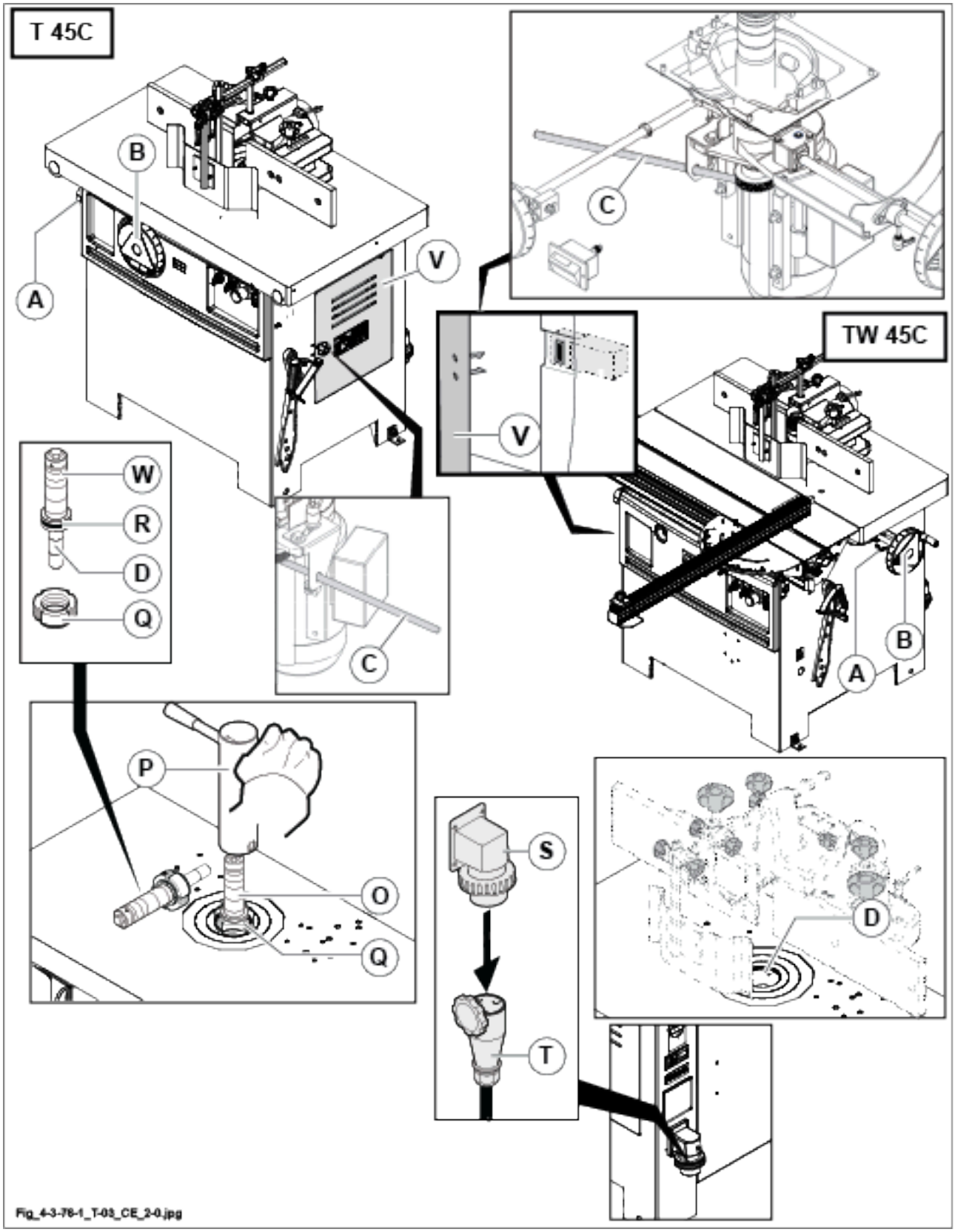
T 45C
B
A
V
C
W
R
D
Q
C
V
TW 45C
B
A
P
O
Q
S
T
D
Fig_4-3-76-1_T-03_CE_2-0.jpg

5.4 ⚠ Tool fitting - SAFETY NOTES

DANGER

all adjusting operations are to be carried out with standstill spindle.

WARNING

Use proper gloves for handling the tools.

- Circular blades may not be fitted to the spindle.
- It is forbidden to insert shims between the spacer rings to willingly unbalance the tools.
- Each working shall be separately considered and you have to fit the proper guard.
- The min. hole diameter on the table depends on the tool and the height at which the cutter is set.

To get the hole as small as possible use the supplied rings (T supplied with machine).

In this way you reduce the risk that the workpiece oscillates and fits into the cutters during its passage on the hole.

- Make sure that the last ring with screw or nut for tool locking (untiunscrewing device) has a sufficient grip on the spindle, then clamp.
- Adjust the hood - fence unit in order to reduce the opening between fence halves and tool to a minimum.
- The tool adjustment shall be carried out with the machine off and with proper instruments (gauge, comparator).
- Before starting the machine make sure that the tools do not touch the parts of the machine.

NOTE

The operator may use both set of tools and single cutters.

In that case it is convenient to number the single cutters.

Each number indicates:

- A measure corresponding to the tool height from the worktable.

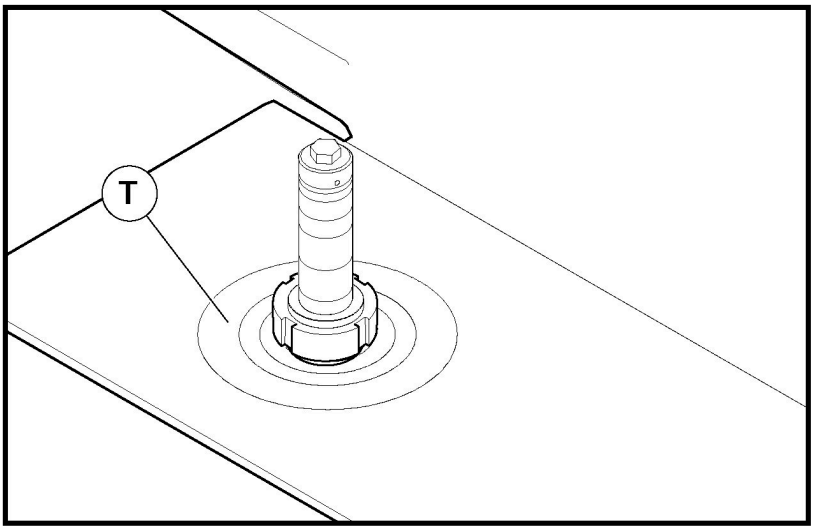

Fig_4.3-82_CU410_ELITE_S_CE.jpg

5.4.1 Tool fitting

DANGER

all adjusting operations are to be carried out with standstill spindle.

Always wear gauntlets when handling the tools.

Before performing any operation, cut off the electrical supply and disconnect the power supply cable (socket T) from the plug (S).

Proceed as indicated below:

- Release the knob (A).
- Lift the spindle to the maximum height by turning the handwheel (B).
- Open the door (V) (it acts on a micro that prevents the motor start).
- Lock the rotation of the spindle by turning it manually until it is to locked with the accessory pin (C).
- Unscrew the knob (D).
- Lift the door (L) of the spindle moulder hood (1).
- If the shaping hood (2) is installed on the machine, disassemble the guard (Q) and the track feeling steady rests (T), while with the tenoning hood (3) open the door (Z) to mount the milling tools.
- Loosen the screw (R) by means of the accessory wrench.
- Remove spacer rings (E).
- Remove if necessary rings (S) from the machine table.
- Mount milling cutters (F) on the moulder shaft using the special spacer rings between one tool and another.

SPECIALISED PERSONNEL

fit the cutters as low as possible on the spindle, taking every precaution to avoid vibrations. It is prohibited to mount tools with a diameter and weight exceeding that indicated in Chap. "Technical specifications".

- Tighten the screw (R) well.
- Ensure the moulder spindle can rotate freely by removing the pin (C).
- Close the door (V).
- Return the spindle guard (1, 2, 3) to the initial conditions (tighten the door L, Z or the guard Q).

NOTE

the shaft vertical positioning should always be executed starting from its lower part, to counteract the effect of any possible mechanical slack.

NOTE

The operator may use both set of tools and single cutters. In that case it is convenient to number the single cutters.

Each number indicates:

- a measure corresponding to the tool height from the worktable.

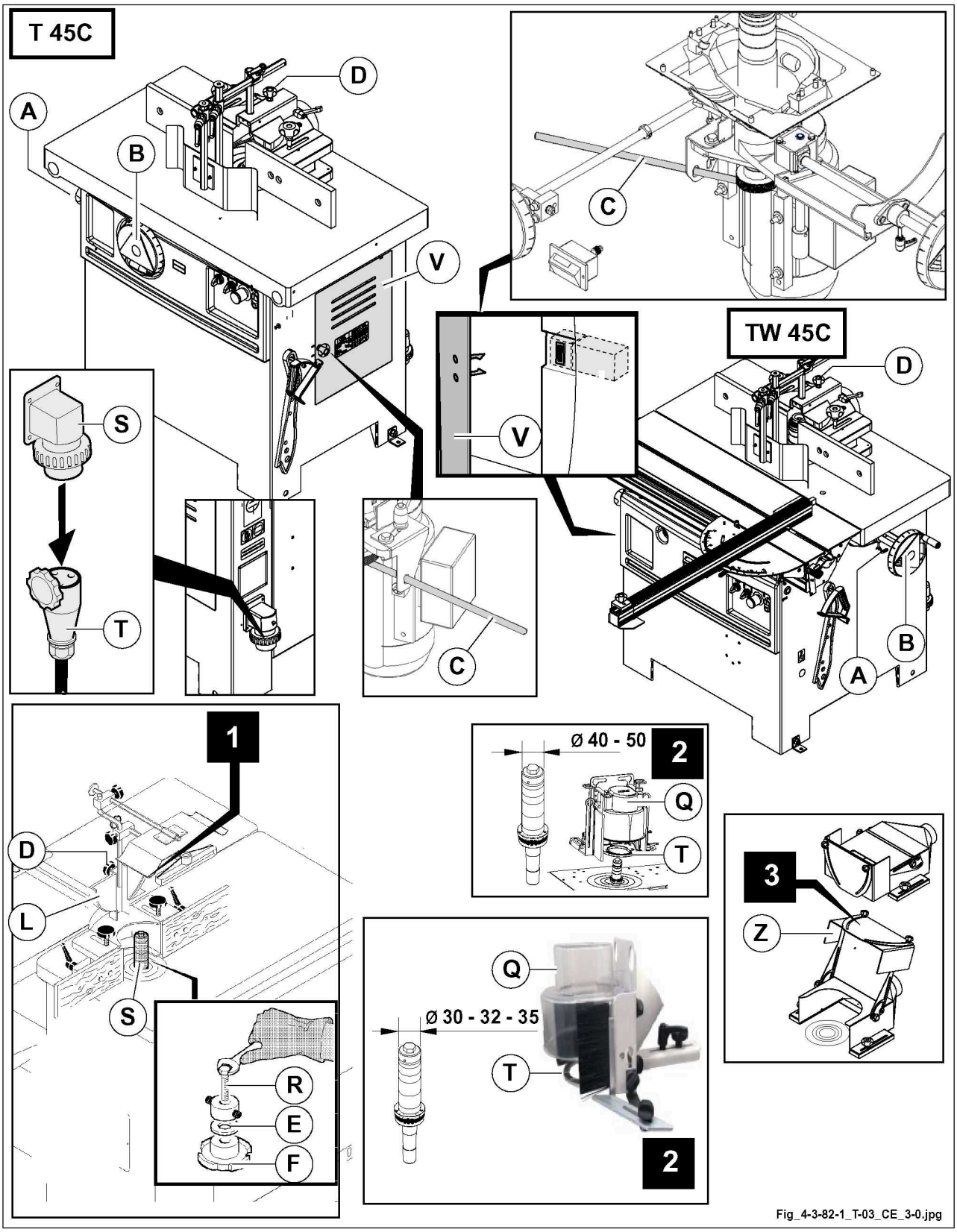
T 45C
A
B
D
V
C
S
T
TW 45C
1
L
R
E
F
Ø 40 - 50
2
Q
Ø 30 - 32 - 35
3
Z
Fig_4-3-82-1_T-03_CE_3-0.jpg

5.5 Electrical installation

NOTICE

The installation operations must be performed by the manufacturer's specialised technical personnel or personnel authorised by the manufacturer.

5.5.1 Requisites for the electricity supply system

DANGER

the electric connection and subsequent controls must be carried out by a specialised electrician, referring to the wiring diagram supplied with the machine.

DANGER

Switches with electronic brake cannot be connected to:

- **curent generators, emergency generators, gensets**
- **electronic mains transformers**
- **static inverters**
- **mains voltages with non-conforming sinusoidal shape.**

INTRODUCTION

SPECIALISED PERSONNEL

For proper connection it is always mandatory to refer, in addition to the following, also to the wiring diagram and the plate on the electric panel of the individual machine.

The electrical panels of the machines are suitable to be powered to a single/three-phase network with/without neutral as indicated in the machine/plate electric panel/LAYOUT.

If the power supply voltage at the final client is different to the indications on the machine plate/electrical panel plate/ LAYOUT, see the "machine electrical power supply specifications" section.

The input and connection of the power supply line inside the electrical panel must be carried out in compliance with the following instructions:

- connecting the cables to the input terminals of the main disconnection device of the electrical panel or, where present, to the connection terminal board located upstream of the switch (as also indicated in the electrical diagram)
- so as not to compromise the degree of protection IP54 of the electrical panel declared by the manufacturer by NOT drilling holes in the electrical panel carpentry;
- respecting the radii of curvature as indicated by the cable manufacturer;
- complying with the laying limits as indicated by the cable manufacturer;
- using the tightening torque indicated on the wiring diagram of the machine;
- without mechanically damaging the switch and the cable itself.

SPECIFICATIONS OF THE ELECTRICAL SUPPLY OF THE MACHINE

- Distribution systems allowed: type TN-S / TN-C.
- Phases number (~) and neutral conductor: see the indications on the machine plate/electrical panel plate/LAYOUT.
- Nominal voltage (Un) and tolerance when different from +/- 6%: see the indications on the machine plate/electrical panel plate/LAYOUT.
- Voltage interruption: Power supply voltage interrupted or reset for a time not exceeding 3 ms, at any moment of the power cycle with more than 1 s between two successive interruptions.
- Voltage gaps: not exceeding 20 % of the peak supply voltage for more than one cycle with more than one second between two successive gaps.
- Frequency (f) and tolerance when different from +/- 1%: see the indications on the machine plate/electrical panel plate/LAYOUT.
- Nominal machine current (In): see the indications on the machine plate/electrical panel plate/LAYOUT.
- Short circuit seal (Icc): see the indications on the machine plate/electrical panel plate/LAYOUT.
- Minimum neutral conductor section: see the indications on the electrical diagram/LAYOUT.
- Minimum earthing protection conductor section: see the indications on the wiring diagram/LAYOUT.

NOTE

The LAYOUT can be provided as a separate document, attached to the machine instruction manual, or integrated with it.

NOTICE

When the distribution system and/or the supply voltage at the customer's premises are different from those provided for the machine, the following prescriptions apply:

- Distribution system type TN-C / TN-S in the presence of voltages other than those provided for the machine: the use of an autotransformer or transformer is required (not provided for in the standard supply unless otherwise agreed).
- IT type distribution system: it is mandatory to use a three-phase transformer regardless of the supply voltage (not provided for in the standard supply unless otherwise agreed).
- TT type distribution system: in order to avoid disturbances and malfunctions it is mandatory to use a three-phase transformer regardless of the supply voltage (not provided for in the standard supply unless otherwise agreed).

The supply of a transformer/auto-transformer is ALWAYS understood as:

1. Component not included in the standard supply and an integral part of the distribution system of the installation site.
2. Component external to the machine and not an integral part of it.
3. Component to be connected and protected by the client.

MACHINE PROTECTION AGAINST INDIRECT CONTACTS:

The machine is equipped with a grounded earth circuit to the PE terminal.

It is up to the customer to complete the protection against indirect contact.

To this end, the customer must:

1. Use a qualified professional for the project and a qualified installer (both with the necessary requirements according to local legislation).
2. If there is a TN-S distribution system, install a differential current device (RCD) on the supply line with the following minimum specifications:
   - adjustable both in current and intervention time.
   - suitable for recognizing continuous or high frequency fault differential currents.
   - positioned outside the machine electrical panel
3. If there is a TN-C distribution system, install a differential current device (RCD) with the characteristics indicated in point 2, after separating THE PEN conductor into the respective PE and N conductors upstream of the RCD itself.

DANGER

The installation of inadequate differential protection devices may result in unwanted untimely interventions during the use of the machine.

Any damage of any kind resulting from untimely interventions cannot be attributed to the Manufacturer of the Machine.

NOTE

Remember that in environments with greater fire risks, as expressed in IEC60364-4-42, to ensure the protection against fires caused by currents dispersed to the ground, the maximum value of the differential triggering current must be 300mA.

NOTICE

The protection against such risks is the responsibility of the Customer who, for this purpose, will have to use specialized personnel (electrician, installation personnel of electrical systems).

The CUSTOMER must COMPLETE the measures to guarantee the protection against electrocution risks due to indirect contacts, even if the machine includes an internal grounding system as far as the PE terminal.

MACHINE PROTECTION AGAINST OVERCURRENTS

All branch circuits of the machine are protected against overcurrents (overload and short circuit).

It is up to the customer to ensure protection against short circuit overcurrents of the Feeder

(part of the circuit between the general disconnecting device of the machine and the bypass circuits).

To this end, the customer must:

1. Use a qualified professional for the project and a qualified installer. (Both with the necessary requirements according to local laws).
2. Protect the Feeder by installing a three-wire fuse supply line with the following minimum specifications:

- Quick type.
- Compatible with the Icc value required for the machine.
- Positioned outside the machine electrical panel
- A size not exceeding that shown in the table.

COORDINATION OF POWER LINE PROTECTIONS	
Nominal machine current (In) (A)	**Fuse type Quick Maximum size allowed (A)**
0 → 10	12
11 → 14	16
15 → 18	20
19 → 22	25
23 → 28	32
29 → 36	40
37→ 46	50
47 → 54	63
55 → 76	80
77 → 92	100
93 → 110	125
111 → 145	160
146 → 190	200
191 → 230	250
231 → 300	315
301 → 380	400
381 → 500	500

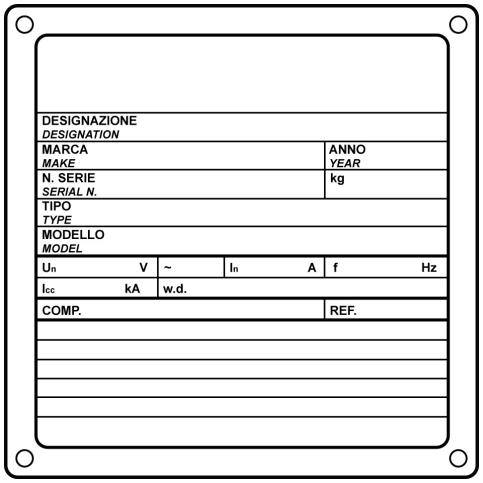

A

Voltage (Volt), current (I=ampere) are indicated on the machine identification plate.
When supplying with a transformer, see the transformer plate data.

SPECIALISED PERSONNEL

If the power cables extend from above, do not pass them near the monitor or PC.
Moreover do not use the electrical cabinet walls as a support for fixing the power cables.

MACHINE OVERVOLTAGE PROTECTION

The machine is NOT protected against overvoltages.

The electrical system may be subject to overvoltages caused by manoeuvres or faults on the electrical system or of atmospheric origin (phenomena of direct or indirect electrocution of the structure in which it is located or of the electrical line from which the machine is powered).

In the absence of specific requests or requirements from the customer, the Manufacturer of the machine cannot be held liable for damage to the electrical equipment of the machine caused by overvoltages of any kind.

NOTE

The auto-transformers provided by the manufacturer are equipped with "neutral" line.

5.5.2 Electrical power and earth connection

DANGER

Before making the connection, disconnect the main line switch. Always check that the electrical cable used for the machine connection is not live.

Connect the machine to the electrical system as follows:

- arrange the power cord near the socket (A) that is supplied;
- connect the cables to the terminals L1-L2-L3 of the socket and the earthing cable to the terminal marked by the symbol (PE \⏚);
- connect the socket (A) to the plug (B).

5.5.3 Checking the connection is correct

DANGER

CAREFUL WITH THE ELECTRICAL CONNECTION

Incorrect rotation of the tool causes danger to the operator and damage to the product. If the machine is equipped with reversal of rotation, set the selector (C) to pos.1. Activate the spindle moulder assembly for a fraction of a second and check that the shaft turns counterclockwise; if the rotation is incorrect, immediately switch off the power and invert two of the three phases on the terminals (L1-L2-L3).

CAUTION

If the machine is connected with a mobile power supply cable, use a rubber flexible cable marked with H07RN-F or A07RN-F. The relative plug-in socket must comply with the standard DIN 49463 and the international standards IEC 309-1 and IEC 309-2.

DANGER

in the switches with electronic brake, even with the motor stopped, the motor is not galvanically disconnected from the mains. The switch supplies the motor with voltage even after switching off; in case of long machining pauses or machine stops remove the power supply cable socket.

NOTE

the documentation with wiring diagram and certificates is inside the accessories case.

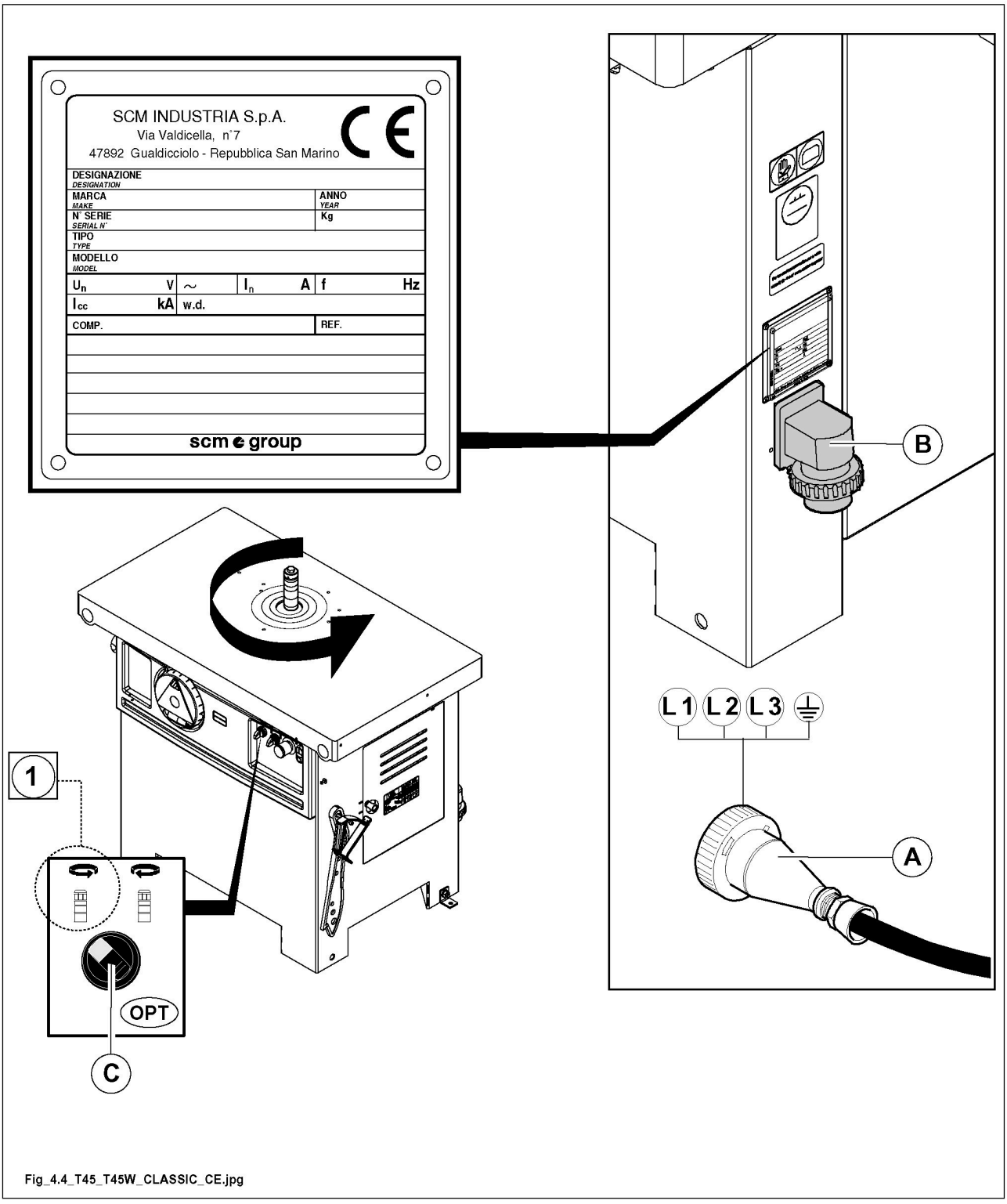

Fig_4.4_T45_T45W_CLASSIC_CE.jpg

5.6 Connection to the suction system

DANGER

The machine must be connected to the suction system in order to function correctly and safeguard the operator. Always work with the suction system in operation.

CAUTION

The extraction system must comply with UNI EN 12779:2016 or EN 16770:2018.

NOTE

Always start the suction system and the operator assembly motor at the same time.

NOTE

Connect the exhaust pipes to the suction system with hoses of proper diameter. Clamp it with a proper clip to ensure its contact.

we recommend that the suction sleeve is arranged out of the suction hood in order to avoid clogging caused by chips.

The suction pipe fitting should not hinder the operator during the woodworking process.

Extractor outlets

(**A**)	Ø 120 mm	router hood
(**D**)	Ø 120 mm	lower vacuum spindle moulder OPT
(**H**)	Ø 120 mm	tenoning shaper hood OPT
(**S1**)	Ø 80 mm	Shaping hood
(**S2**)	Ø 120 mm	Shaping hood

Suction air flow

(**A**)	The suction system shall ensure a flow equal to 814 m³/h at a flow speed at least of 20 m/s - chips dry (1140 m³/h --> 28 m/s - chips wet).
(**D**) OPT	The suction system shall ensure a flow equal to 814 m³/h at a flow speed at least of 20 m/s - chips dry (1140 m³/h --> 28 m/s - chips wet).
(**H**) OPT	The suction system shall ensure a flow equal to 814 m³/h at a flow speed at least of 20 m/s - chips dry (1140 m³/h --> 28 m/s - chips wet).
(**S1**)	The suction system shall ensure a flow equal to 362 m³/h at a flow speed at least of 20 m/s - chips dry (507 m³/h --> 28 m/s - chips wet).
(**S2**)	The suction system shall ensure a flow equal to 814 m³/h at a flow speed at least of 20 m/s - chips dry (1140 m³/h --> 28 m/s - chips wet).

These values must be checked before starting work.

If other machines are connected to the central system, perform a test when all the suction systems are running.

Good suction operation reduces the risk of inhalation of dust.

The operator must be informed about the risks caused by exposure to dust (see Par. "Dust emission") and the factors that influence its exposure.

Certain factors that reduce the emission of dust in the work environment are:

- regular maintenance of the tools, the machine and the extractor system;
- correct speed selection (where adjustment is possible);
- type of material machined
- importance of local aspiration on each operating unit (dust collection at source)
- correct adjustment of earmuffs and deflectors
- correct use of personal protection equipment (PPE).

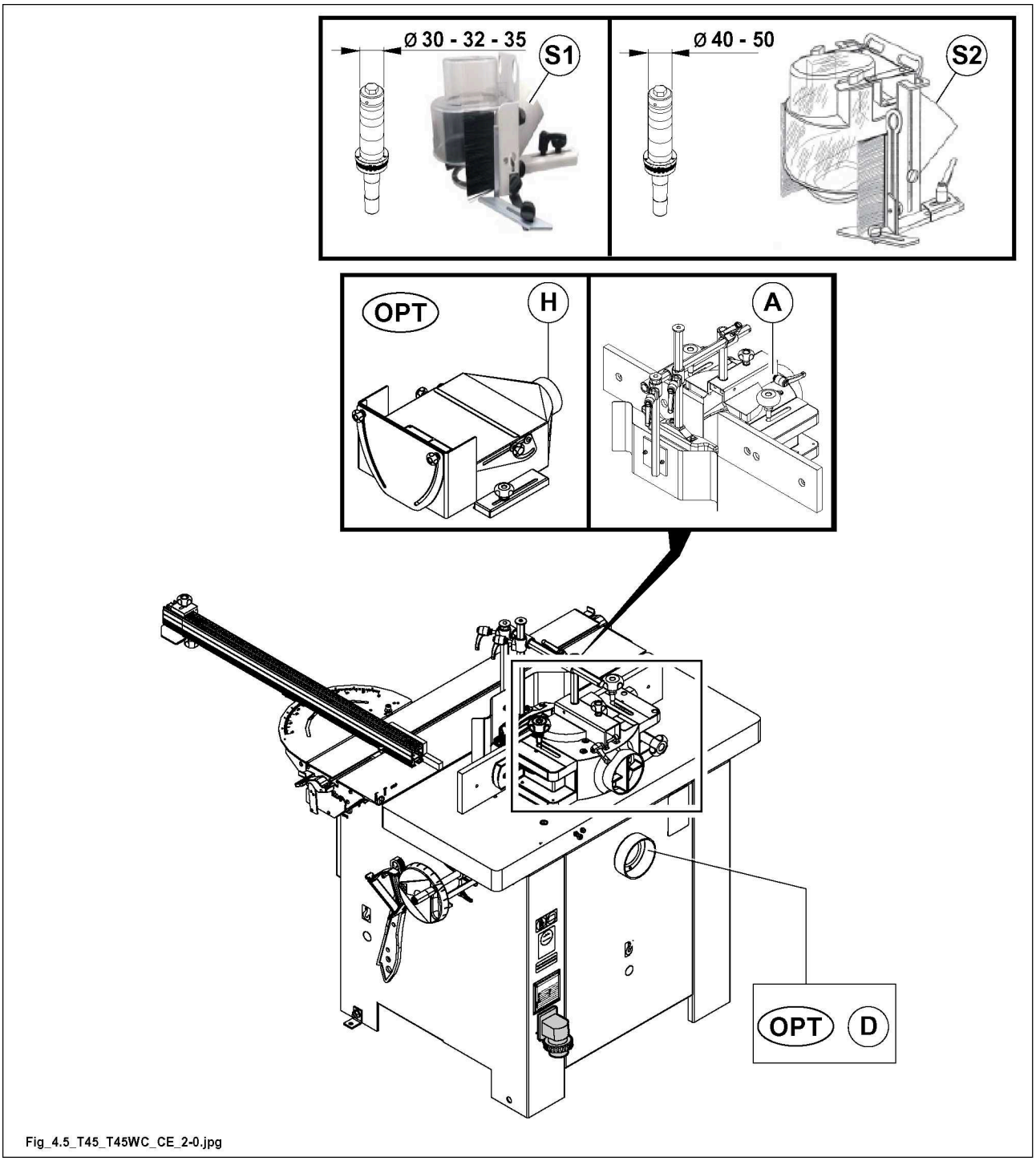

Fig_4.5_T45_T45WC_CE_2-0.jpg

NOTE

Use flexible hoses in antistatic and self-extinguishing material to connect the machine to the extraction system. This prevents the formation of electrical discharges due to the accumulation of static electricity (which could compromise the correct functioning of the machine's electronic components) and hinder the propagation of flames in the event of a fire.

6 Commands

6.1 Control board..... 94
6.2 Emergency buttons..... 95
6.3 Access to the electric housing..... 97
6.4 general controls before machine starting..... 99
6.4.1 Profiling operations..... 100
6.4.2 Milling at the spindle (shaping)..... 100
6.4.3 Tenoning operations OPT..... 100
6.5 Machine start-up - shutdown..... 102
6.5.1 Machine with COUNTERCLOCKWISE SPINDLE ROTATION (against feed direction).... 105
6.5.2 Machine with CLOCKWISE rotation (feed direction)..... 105

6.1 Control board

The control board depends on the machine version:

Ref.	Image	Description / Function	Use and/or indication
1		Emergency pushbutton. Cuts off the motor power supply with intervention of brakes, when present.	Pressed down: machine in emergency Turn in the direction of the arrow to reset
2		Voltage presence indicator.	On means that the panel is powered.
3	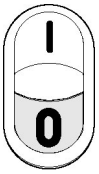	Motor start/stop pushbutton	 = Press the pushbutton to start the motor.  = Press the pushbutton to stop the motor.
4	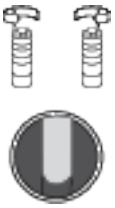	Illuminated selector with 2 positions for locking and releasing self-braking motor. OPT	 counterclockwise (normal rotation direction). 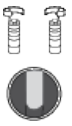 Spindle moulder motor disabled. 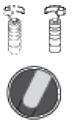 Spindle rotation: clockwise (pilot lamp lit) **Dangerous rotation**.
5		Spindle moulter tilting indicator. - Version " TW 45c "	
6		Electronic brake BLOCKAGE warning light.	"Yellow light" warning light on (braking time longer than 14 s.). The electronic brake is in BLOCK. "Yellow light" warning light flashing (braking time between 10 and 14 s.).  : **to resolve the fault indicated by the "yellow light" warning light see Par.** " Problems - Causes - Solutions".

6.2 Emergency buttons

In case of danger if you press an emergency button any function of the machine is locked.

Emergency buttons present on the machine are:

- Emergency stop push-button (1) on the control panel
- Emergency stop button (2) on the worktable front extension OPT

Periodically press the emergency buttons to check whether they are efficient.

CAUTION

do not use the emergencies to stop the machine when operating in normal conditions.

DANGER

Any anomalies found during the control of these devices, must be reported promptly to the manager , who will put the machine out of service and call the electrical, mechanical maintenance personnel or the Support Service.SCM.

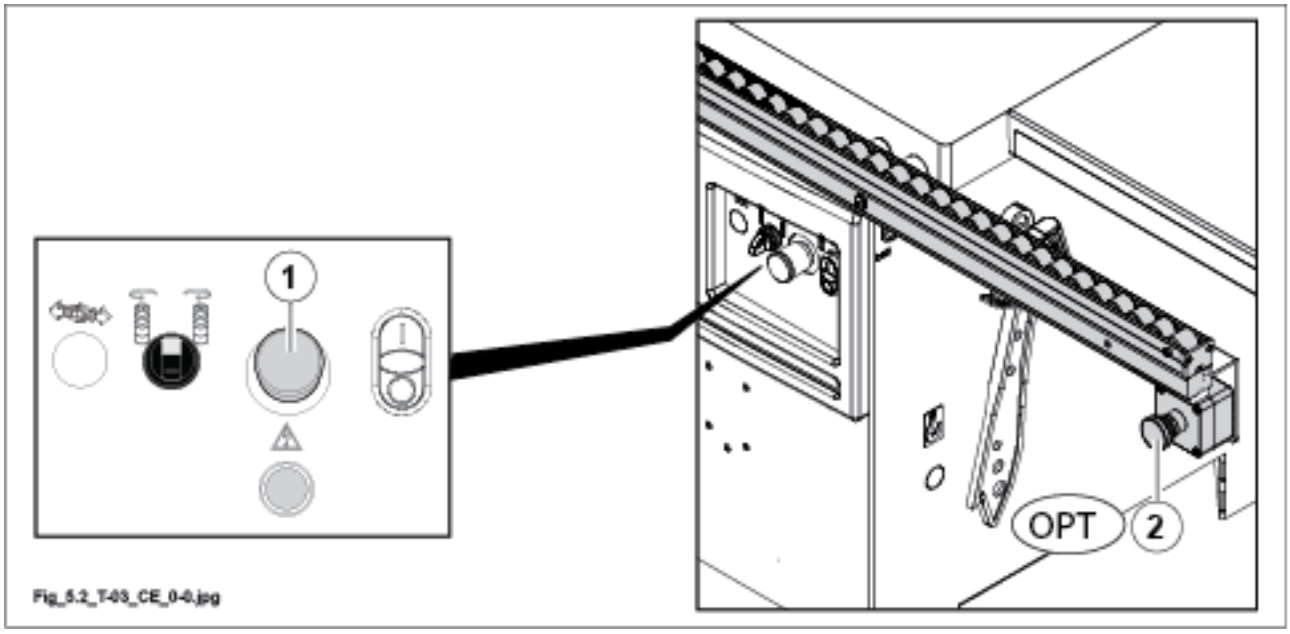
1
OPT
2
Fig_5.2_T-45_CE_0-0.jpg

6.3 Access to the electric housing

DANGER

before performing any operation, cut off the electrical supply and disconnect the power supply cable (socket T) from the plug (S).

DANGER

Only a skilled electrician may reach the electric housing.

1. Remove the front cover (Z).

CAUTION

with tilting spindle moulder shaft, disassembly of the guard (Z) is possible only after disconnecting the cable (C) from the indicator (R).

2. Shut off the power.
3. Remove the door (P) retaining screws (V).

PROHIBITED

Do not modify or exclude any of the circuits or devices installed.

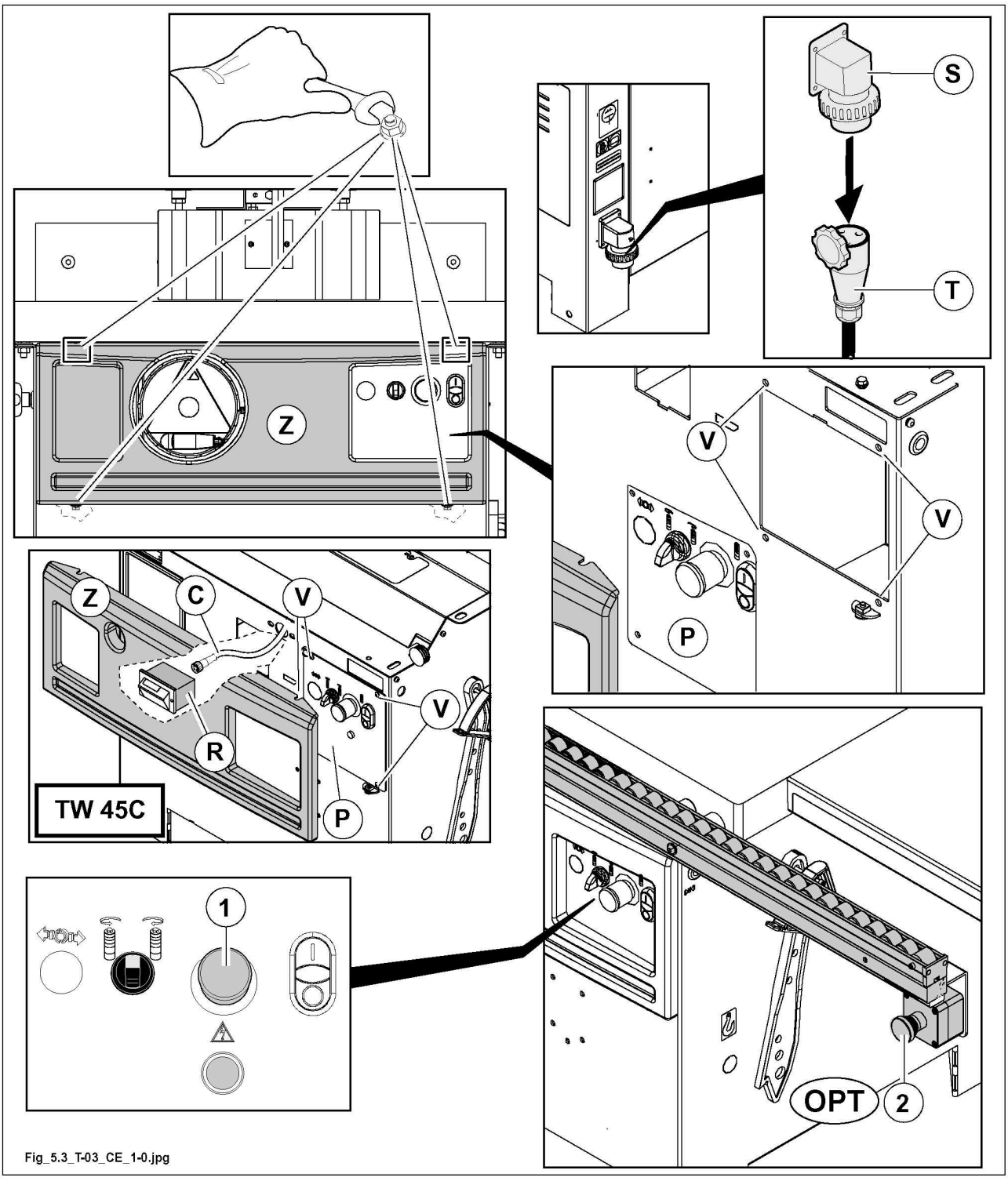

Fig_5.3_T-03_CE_1-0.jpg

6.4 general controls before machine starting

Make sure that:

- The spindle moulder motor housing door is closed
- The machine is connected to the extraction system
- The emergency stop buttons (2) are off. Reset the buttons where necessary
- Illuminated indicator lamp (4)

DANGER

Any anomalies found during the control of these devices, must be reported promptly to the manager , who will put the machine out of service and call the electrical, mechanical maintenance personnel or the Support Service.SCM.

NOTE

Make sure that the speed indicated is proper for the tool fitted to the saw spindle.

PROHIBITED

Do not modify or exclude any of the circuits or devices installed.

DANGER

if the machine features reversal of rotation, make sure this is set for desired operating rotation direction.

PROHIBITED

DO NOT use the machine without having first checked that the safety protections have been installed correctly and secured with the devices required and in the way indicated in this manual. Before every use, with the machine off and tools stopped, try to move the protection to ensure it is installed correctly and fixed completely.

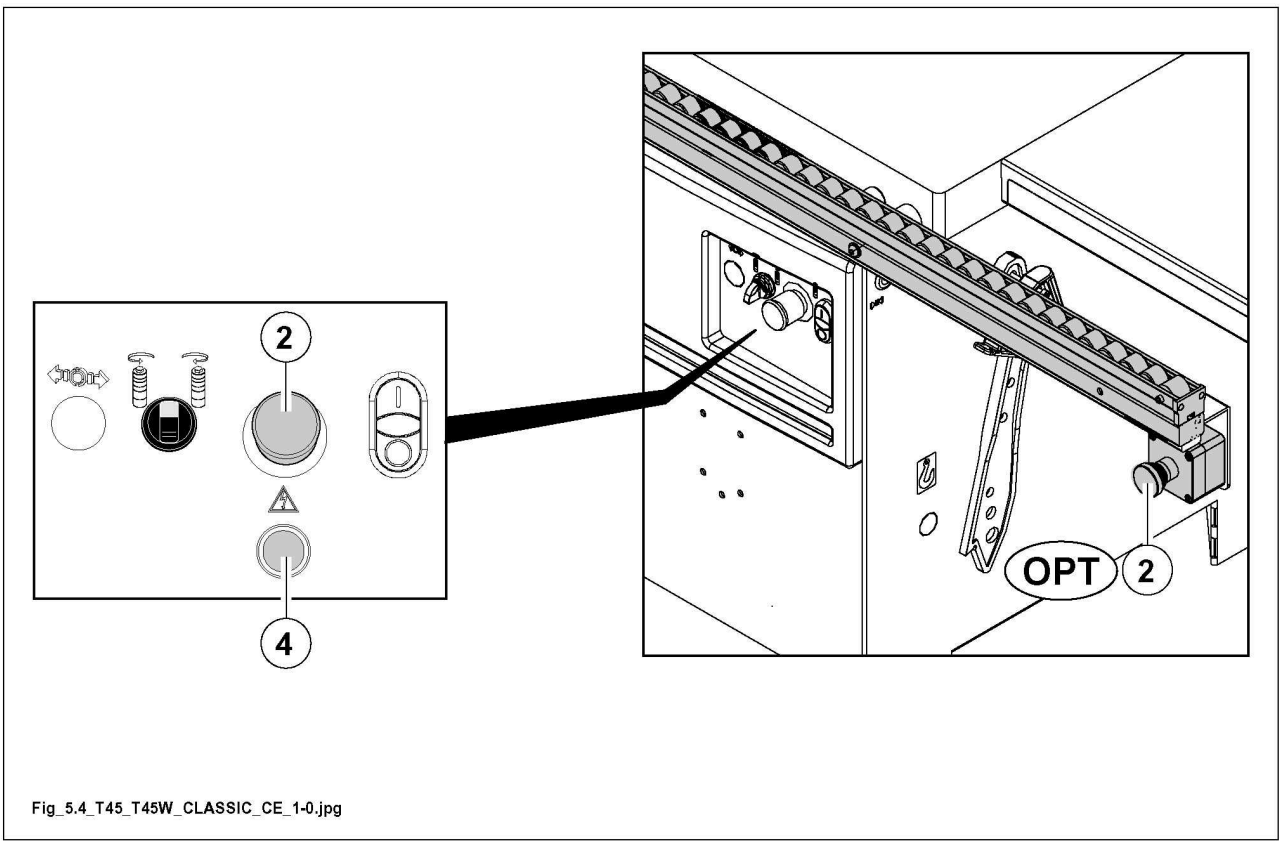

Fig_5.4_T45_T45W_CLASSIC_CE_1-0.jpg

6.4.1 Profiling operations

Make sure that:

- The hood guide (V) is in the right position and locked with the knobs (H, B).
- NEVER exceed the max speed nMAX indicated on the tool; see Chapter "Using and adjusting the spindle".
- The pressers (F and G) are correctly positioned to cover the tool as much as possible (see paragraph" Pressure unit for profiling").
- Feed the workpiece using a pusher (S) or a feeder.

6.4.2 Milling at the spindle (shaping)

Make sure that:

- The spindle guard (P1/ P2) is in the right position and locked by handles (L);
- The speed is proper for the fitted tool (see Chapter "Using and adjusting the spindle").

6.4.3 Tenoning operations OPT

Make sure that:

- The tenoning hood (T) is in the right position and locked by knobs (R).
- The max. spindle speed is 3500 (4200 - 60 Hz) rpm and that it does not exceed the max. speed permitted for the used tool.

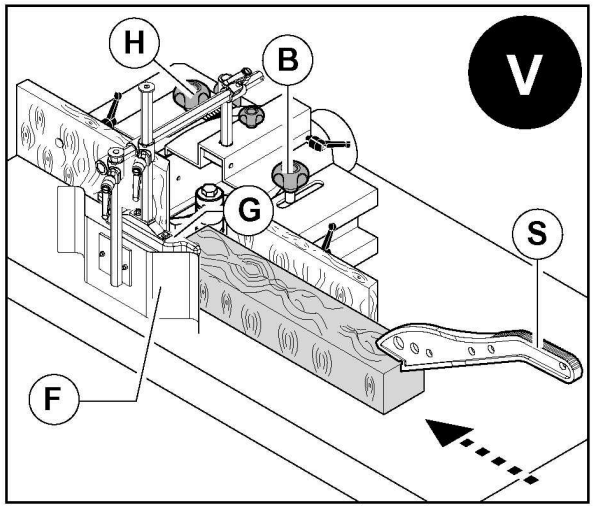

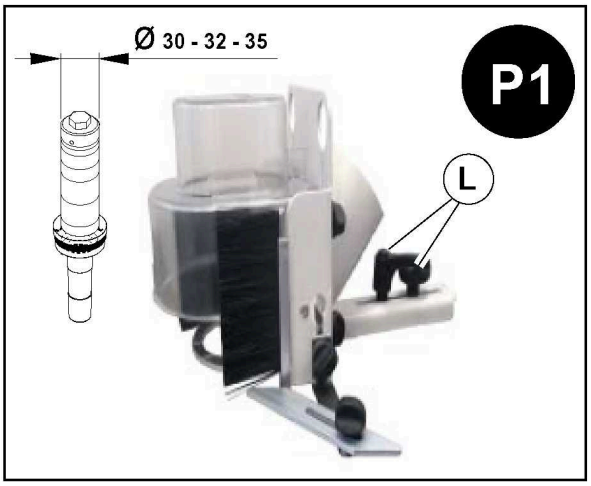

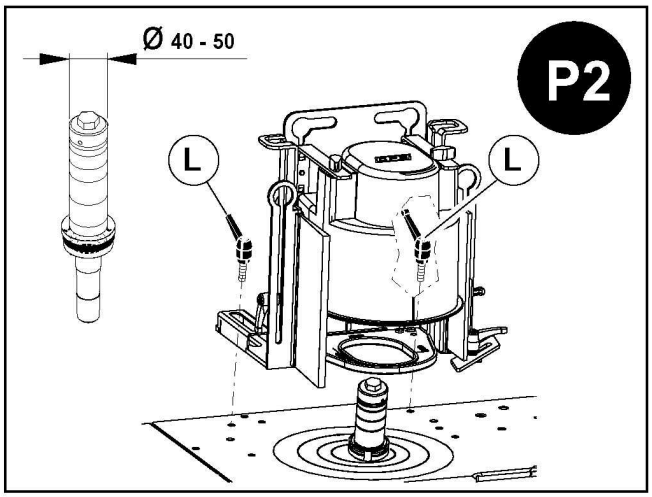

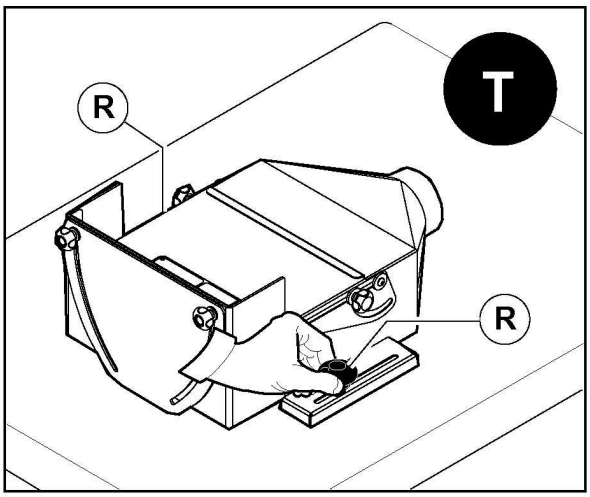

Fig_5.4-1_LAB_300P_2-0.jpg

DANGER

ensure that the fixing devices of the safety protections are kept clean and perfectly efficient in order to guarantee their correct assembly. Ensure that the fixing holes are clean, especially the blind threaded holes on the horizontal surfaces, that are more prone to fill with shavings and dust.

6.5 Machine start-up - shutdown

DANGER

before switching on the machine, ensure that all the tools are well tightened, that the set spindle rotation speed is correct (see Chap. "Using and adjusting the spindle") and that the router protection suitable for the type of machining has been installed.

NOTE

Perform the checks set out in paragraph " general controls before machine starting" .

Machine Start procedure

1. Press the button (E).

Machine Stop procedure

1. Press the button (D).

DANGER

avoid short switching cycles. When starting and stopping the machine frequently, the buildup of heat produced by the electronic braking device can damage the motor and the actual device or generate alarms in its control logic.

DANGER

with the single-phase motor DO NOT restart the machine immediately after a stop command. Wait for at least 30 s. before starting the start procedure.

DANGER

if there is no power supply the electronic brake does not work. CAUTION! MOVING TOOLS. Do not insert hands in the danger area.

Electronic brake operation		
1st Case		
1st braking	Stop time between 10 and 14 s.	The "yellow" warning light (6) flashes. The machine can be restarted. At the restart the "yellow light" switches off.
2nd braking	Stop time between 10 and 14 s.	The "yellow" warning light (6) flashes. The machine can be restarted. At the restart the "yellow light" switches off
3rd braking	Stop time between 10 and 14 s.	The "yellow" warning light (6) is steady on and the machine cannot be restarted. To reset the braking device, switch off the machine from the switch (main switch on 0/ OFF). The machine can be restarted after having set the main switch to 1/ON.
2nd Case		
1st braking	Braking time longer than 14 s.	The "yellow" warning light (6) is steady on and the machine cannot be restarted. To reset the braking device, switch off the machine from the switch (main switch on 0/ OFF). The machine can be restarted after having set the main switch to 1/ON.

After the third unsuccessful attempt to brake (stopping time of more than 10 seconds) or after a braking attempt of more than 14 seconds, the electronic brake would block automatically thus avoiding the starting of the selected function. The blocked state is signalled by the yellow warning light (6), located on the control panel, which stays on for more than 14 seconds. Disconnect the power supply to the machine to rest the function. If the problem remains, contact SCM.

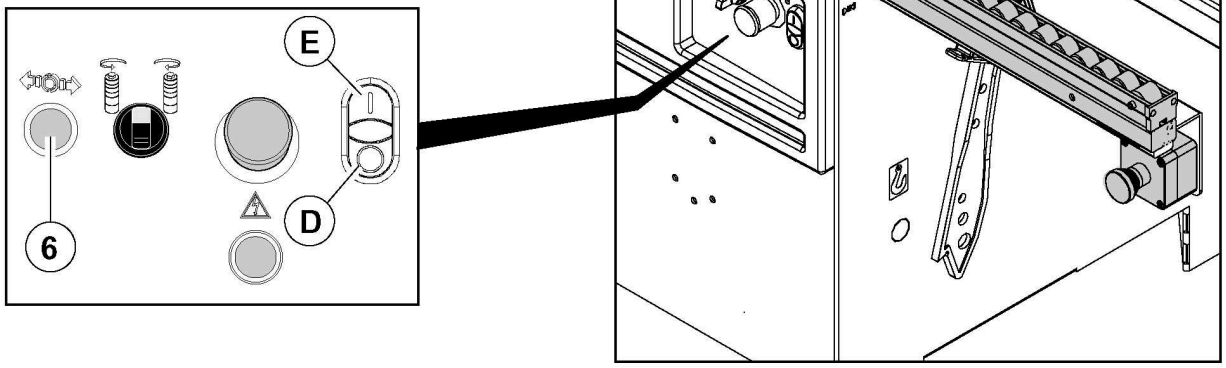

Fig_5.5_T45_T45W_CLASSIC_CE_1-0.jpg

6.5.1 Machine with COUNTERCLOCKWISE SPINDLE ROTATION (against feed direction)

NOTE
When possible always use this rotation direction when possible as it is the normal rotation direction.

Machine Start procedure

1. Rotate the selector (N) to the left and keep it in position;
2. Press the button (M) to start the machining unit; release the selector (N) which will return to the central position.

NOTE
When you stop the machine it is not necessary repeat instructions “1” if you want to start with counterclockwise spindle rotation.

Machine Stop procedure

1. Press (P) button.

6.5.2 Machine with CLOCKWISE rotation (feed direction)

NOTE
for safety reasons, the rotation reversal cannot be used when tenoning.

NOTE
Avoid this direction of rotation as much as possible; the router turns "in the same direction as the normal as the feed direction". as the cutter rotates "in feed direction "there is the risk that the cutter withdraws the workpiece from the presser: Pay attention!.Set the pressers (see Chapter "Using and adjusting the spindle").

Machine Start procedure

1. Rotate the selector (N) to the right and keep it in position.
2. Press the button (M) to start the machining unit; release the selector (N) which will return to the central position.

NOTE

This operation is to be carried out every time you stop the machine and when you want to start the machine with clockwise spindle rotation.

Machine Stop procedure

1. Press (P) button.

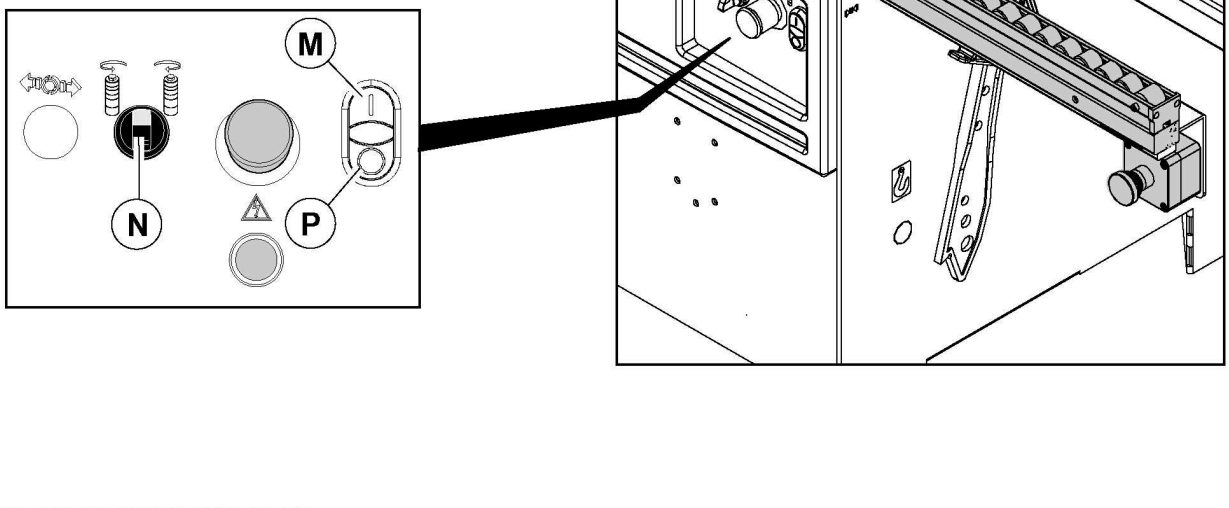

Fig_5.5.2_T45_T45W_CLASSIC_CE_1-0.jpg

7 Using and adjusting the spindle

7.1 Adjustments 108
7.1.1 Spindle height adjusting 108
7.1.2 Spindle tilting (OPT) 110
7.2 Spindle speed selection 112
7.2.1 Speed change 113
7.3 Aluminium sliding table (OPT) 116
7.3.1 Using the telescopic rule (OPT) 118
7.3.2 Use of the presser unit (OPT) 119
7.3.3 Additional rule for oblique cuts with millimeter rule 120
7.4 Telescopic rule on the small table to tighten (OPT) 122
7.4.1 Rule rotation 122
7.4.2 To move the rule close to the tools 122
7.5 Use of the tenoning table (OPT) 124
7.5.1 Execution of straight tenons 126
7.5.1.1 Clamping arm use 126
7.5.2 Oblique tenons 128
7.5.2.1 Clamping arm use 128
7.6 Adjustable Hood-Fence unit 130
7.6.1 Use of hood-fence for small pieces 132
7.6.2 Adjust spindle moulder hood guide for moulding without removal 134
7.6.3 Adjust spindle moulder hood guide for moulding with removal 136
7.6.4 Hood-fence adjusting for profiling with rotation direction reversal 138
7.6.5 Working examples 144
7.6.5.1 Profile 144
7.6.5.2 Rabbeting 147
7.6.6 Hood-fence unit adjusting for working at the front end (OPT) 148
7.7 Tenoning hood (OPT) 150
7.7.1 Adjusting 150
7.8 Pressure unit for profiling 152
7.8.1 Adjusting 154
7.8.2 Adjusting the horizontal presser 156
7.9 Guard for milling at the spindle 158
7.9.1 Adjusting 158
7.9.2 Working examples 162
7.9.3 Maintenance 163

7.1 Adjustments

DANGER

Ensure that during shaft movement there is no interference with machine parts.

7.1.1 Spindle height adjusting

It adjusts the tool to the worktable.

DANGER

Ensure that during shaft movement there is no interference with machine parts.

DANGER

The tool adjusting must be carried out with machine off.

- Loosen the knob (B).
- To move the spindle vertically use the handwheel (A).
- After each adjustment block the rotation by tightening the knob (B).

DANGER

To take up slack you have to reach the right height always with motion upwards.

Every turn of the handwheel corresponds to a 2mm shifting.

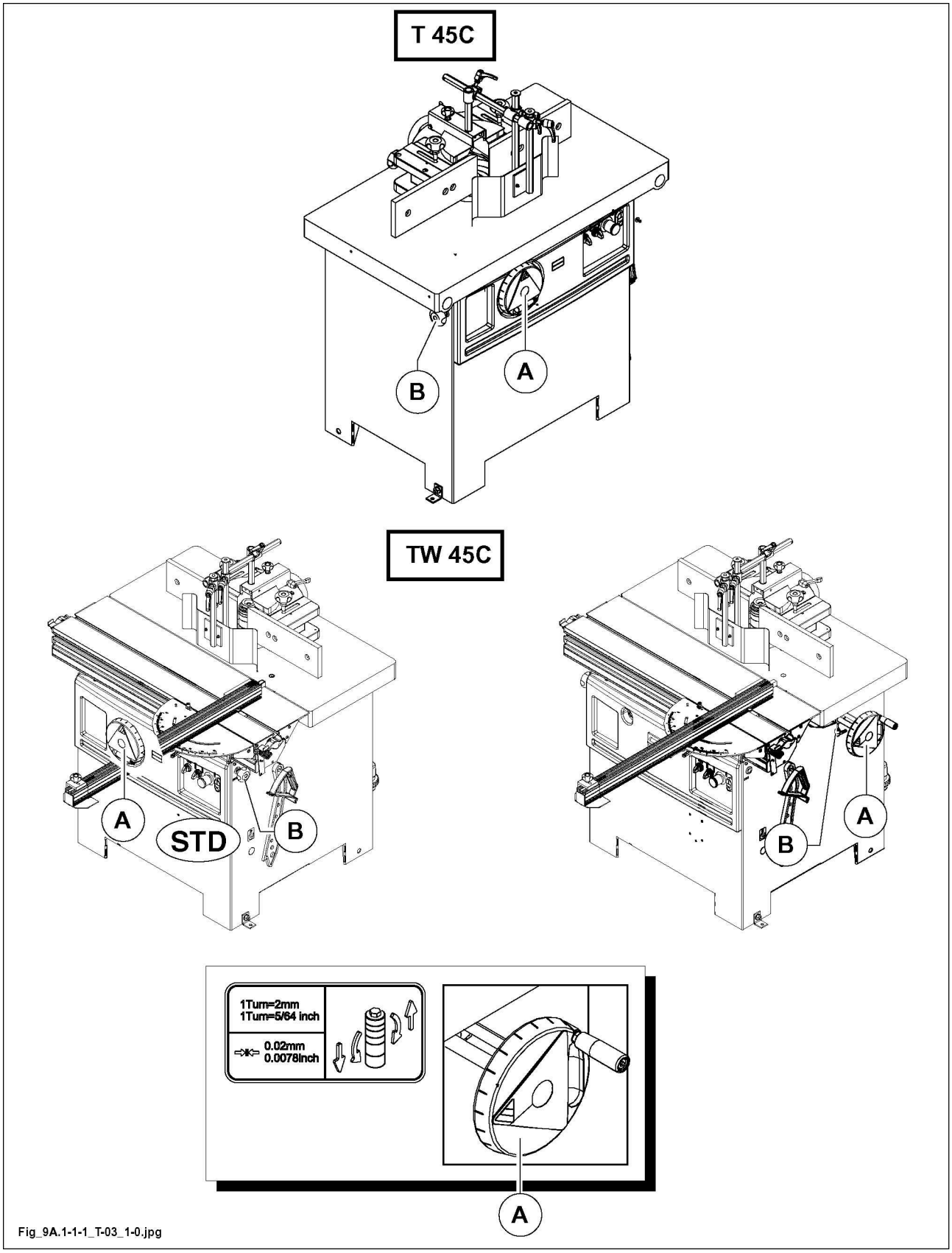

Fig_9A.1-1-1_T-03_1-0.jpg

7.1.2 Spindle tilting OPT

Available only on the SPINDLE MOULDER model "TW 45c"

DANGER

Tilting is only possible with tools having a maximum diameter of 150 mm.

DANGER

The tool spindle can only be adjusted with the machine off and with the tool stopped.

DANGER

Ensure that during shaft movement there is no interference with machine parts.

To tilt the spindle from 90° to 45°

- Turn the handwheel (C) after having released the knob (D).
- After every positioning tighten the knob (D).
- Read the quota on the indicator (I).

If the indicator gives an imprecise indication (I), restore adjustments as follows:

- Insert a small screwdriver into hole (T), lightly press and turn clockwise to increase the decimal of the measure indicated, counterclockwise to decrease the decimal;

NOTE

the value of the tilting reported by the numerical indicator (I) has an error range of ± 0.05 mm; in positions at 45° and 90° to have a more precise reading it is recommended to use the mechanical limit stops as a reference, then rotate the hand wheel (C) as much as possible.

TW 45C

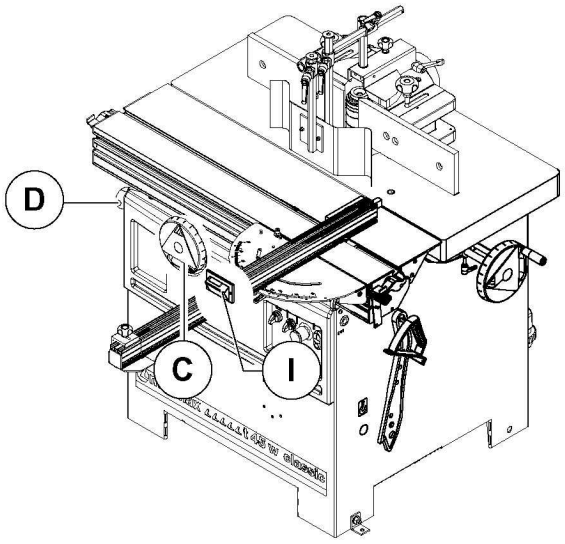

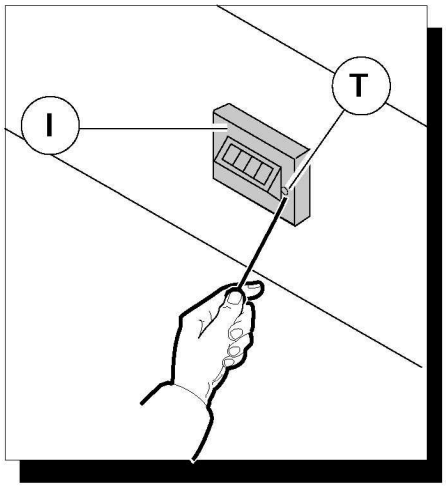

Fig_9A.1-9-1_T-03.jpg

7.2 Spindle speed selection

Select the spindle speed according to the tool, the wood and the working.

DANGER

tenoning must exclusively be carried out with a spindle rotation speed of 3500 rpm (50 Hz) - 4200 rpm (60 Hz).

DANGER

do not select values different from the ones indicated on the plate (see figure), or rotation speed higher than the speed indicated on the tool.

There is the risk of piece kickback or tool rupture.

DANGER

in case of more tools fitted to the spindle, the lowest maximum rotation speed tool is to be considered as a reference. (ie: never exceed 6000 rpm, if you use 2 tools, one tool with max. speed 8000 rpm the other tool with max. speed 6000 rpm).

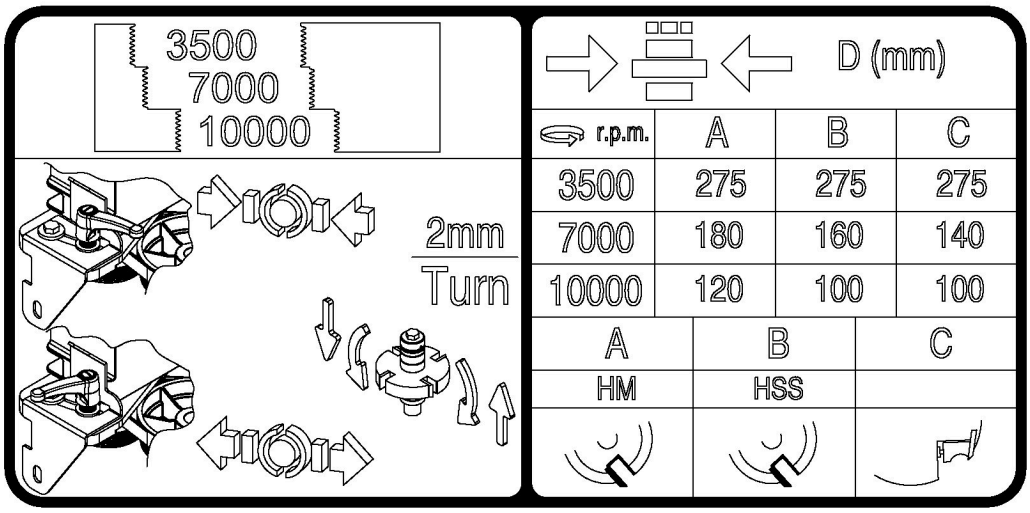

Fig_9A-3A_LAB_300_PLUS.jpg

DANGER

it is forbidden to exceed the speed obtained from the plate (see figure).

7.2.1 Speed change

The spindle speeds are 3.

- (50 Hz): 3,500 - 7,000 - 10,000 rpm
- (60 Hz): 4,200 - 8,400 - 12,000 rpm

Positions and relative speed are given on the plate (B).
To select the speed move the motor belt into the proper race corresponding to the speed desired, proceeding as follows.

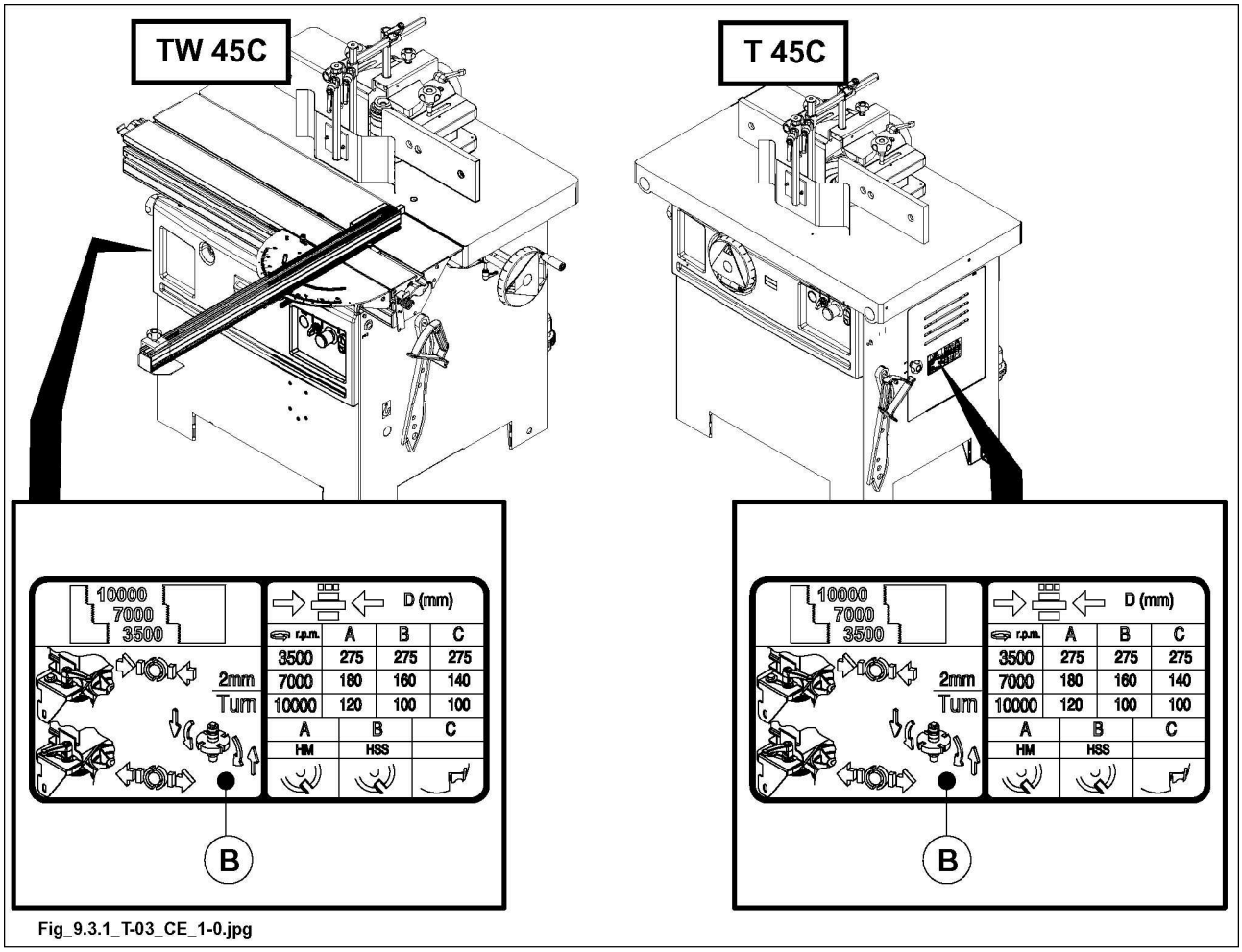

Fig_9.3.1_T-03_CE_1-0.jpg

DANGER

with the selector (E) turned to ( ) (indicator lamp on) the machine is under safe condition.

Before starting the machine make sure that the rotation speed you have selected is proper for the working, the wood type and for the tool used on the machine.

DANGER

all adjusting operations are to be carried out with standstill spindle.

DANGER

Before performing any operation, cut off the electrical supply and disconnect the power supply cable (socket T) from the plug (S).

To change speed move the position of the motor belt in the pulley groove corresponding to the chosen speed, operating as follows:

- Open the door (V) (it acts on a micro that prevents the motor start).
- Loosen the handle (A).
- Push the motor. The belt (C) is now slack.
- Move the belt from its seat to its position, according to the speed to be obtained, referring to the plate (B).
- Operate the motor moving the pulleys apart and tighten the handle (A).

CAUTION

an excessive belt tightening will cause both functioning failures and belts wear beforehand.

- Close the door (V).

NOTE

make sure with your hands that the belt is actually in the grooves of the pulleys relative to the desired rotation speed. If necessary position them correctly.

To view the speed, look at the belt position through the screen (H). Positions and relative speed are given on the plate (B).

DANGER

before starting the machine make sure that the rotation speed you have selected is proper for the working, the wood type and for the tool used on the machine.

DANGER

only on the SPINDLE MOULDER model "TW 45c"

the use of the Ø 275 mm tenoning cap is only allowed with a speed of 3500 rpm (50 Hz) - 4200 rpm (60 Hz).

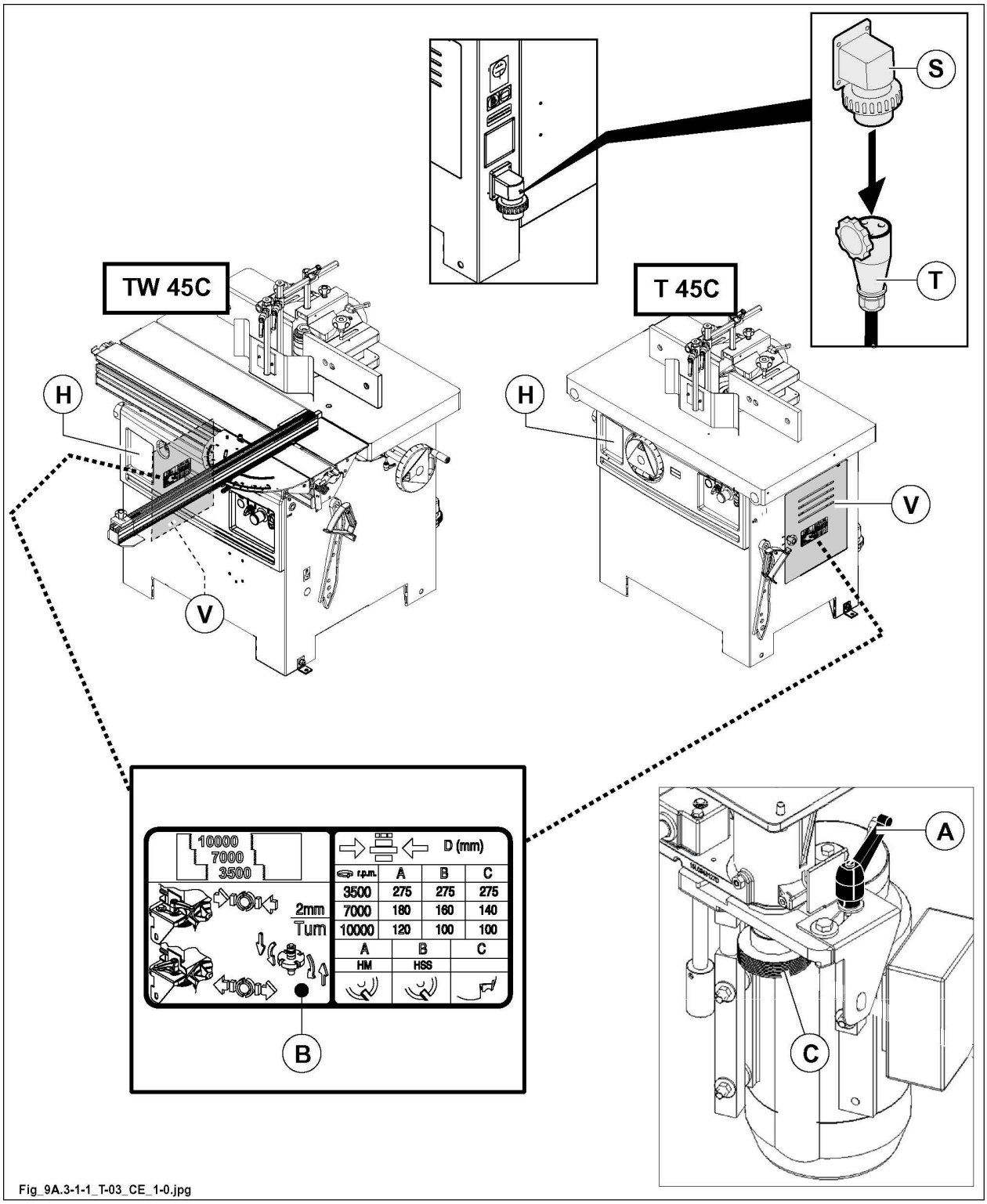

Fig_9A.3-1-1_T-03_CE_1-0.jpg

7.3 Aluminium sliding table OPT

Available only on the SPINDLE MOULDER model "TW 45c"

The aluminium sliding table moves on high precision slideways made of hardened steel in order to ensure the uniform and smooth motion with small friction, necessary for obtaining precise cuts.

Use the lever (A) to lock and release the sliding carriage:

1. Lever raised - carriage locked;
2. Lever lowered - carriage released;

The sliding table may be locked in 2 points:

- the lever (A) is used to block the sliding table in the standby position (sliding table closed), and in the position to load the piece being machined (sliding table fully to the right limit switch).

Fasten the following devices:

Eccentric clamping arm:

- Insert the column rod (D) in the groove on the carriage, mount the arm (E) on the column and secure it in position by locking the handle (F);

NOTE

- no. 1 with the wagon having a length of 1200 mm STD
- no. 2 with the wagon having a length of 2250 mm OPT

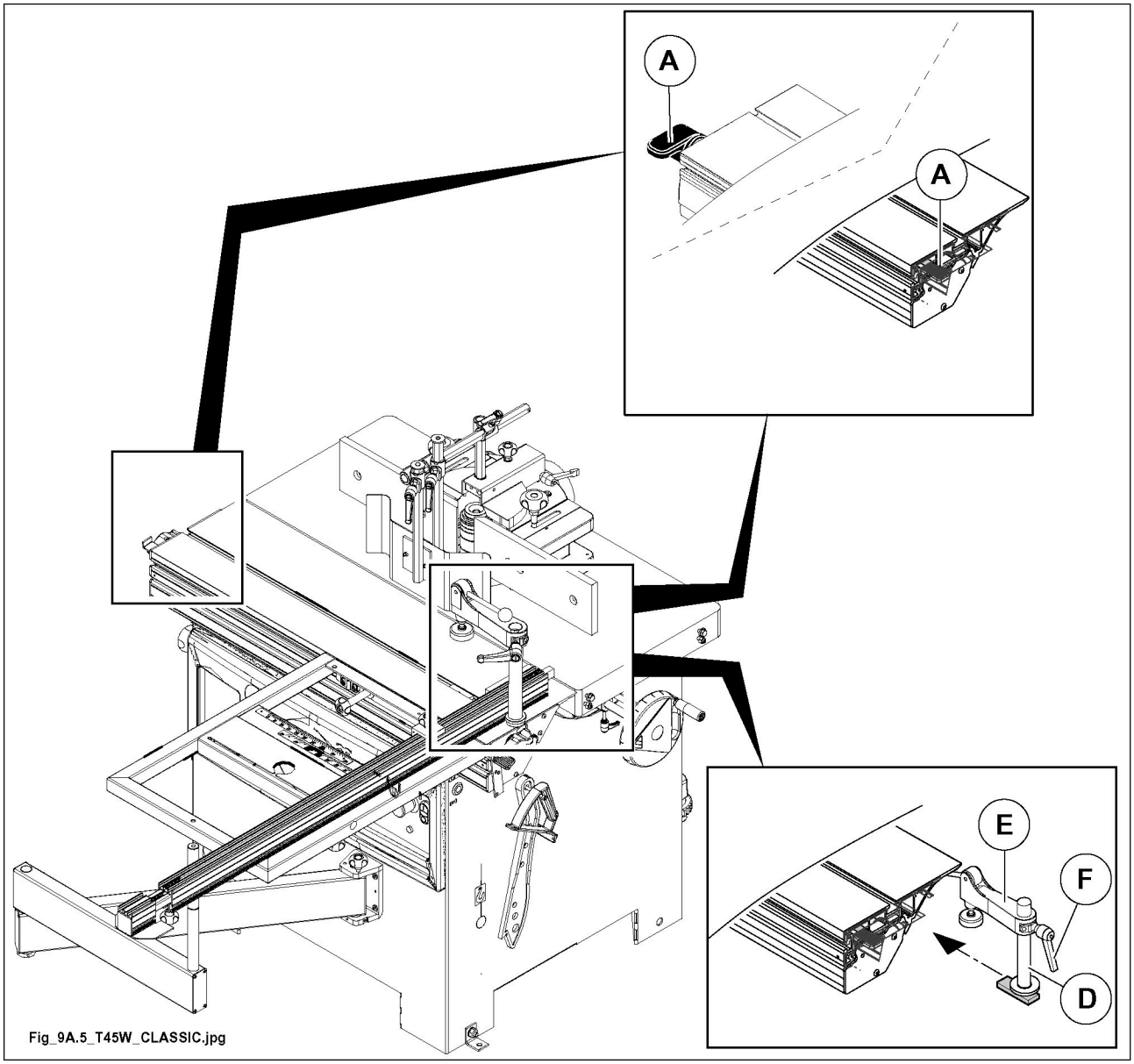
A
A
E
F
D
Fig_9A.5_T45W_CLASSIC.jpg

7.3.1 Using the telescopic rule OPT

Available only on the SPINDLE MOULDER model "TW 45c"

Ⓐ - for 90° machinings

1. Position the telescopic rule so that the pin (C) goes against the gib (L).
2. Position the telescopic rule so that the pin (E) goes against the device (S).
3. Tighten the knob (F).
4. To use position the stops (B) using the metric rule (P) as reference.

Ⓑ - For tilted machining

1. For use, position the ruler referring to the plate (P).
2. Tighten the knob (F).

   The ruler is fitted with an extractable telescopic extension (H), which may be lengthened as required after loosening the knob (G).

   When the splinter guard (M) is worn, bring it up to the spindle by loosening the two screws (N).

Ⓐ = for 90° machinings	Ⓑ = For tilted machining

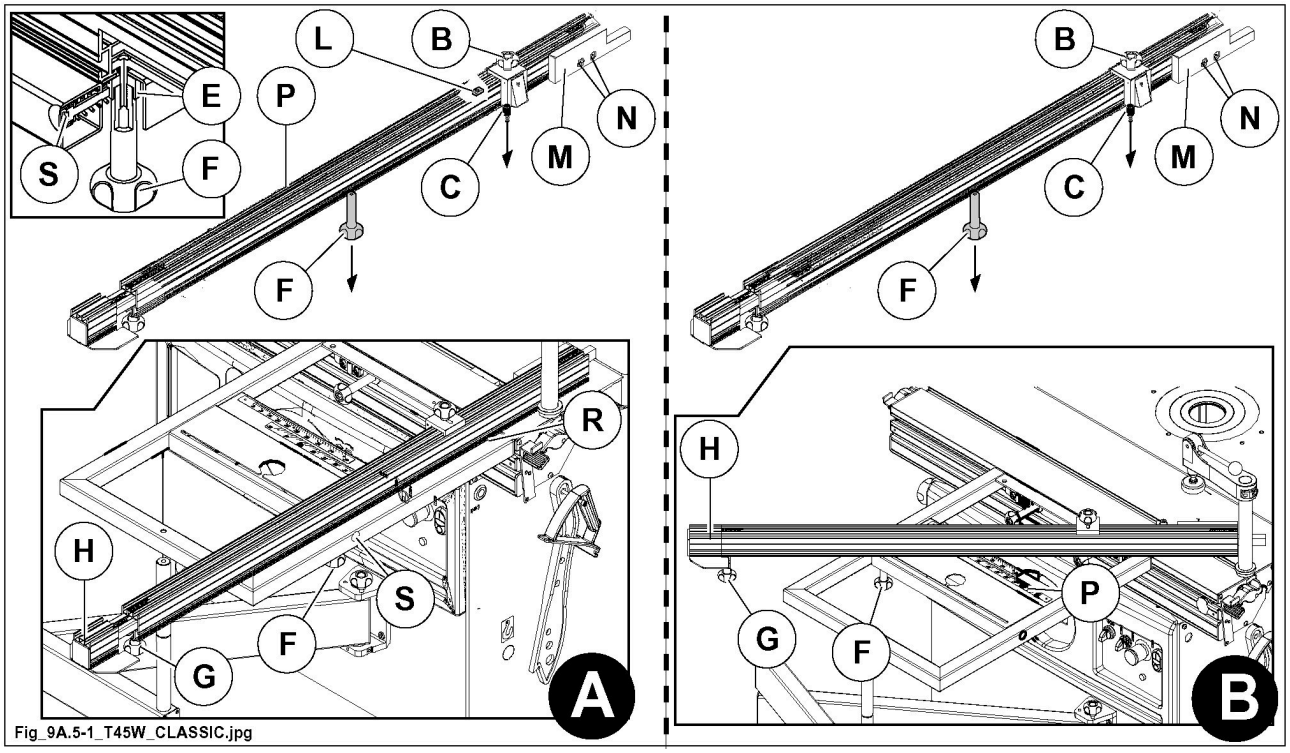

Fig_9A.5-1_T45W_CLASSIC.jpg

7.3.2 Use of the presser unit OPT

Available only on the SPINDLE MOULDER model "TW 45C"

- Use the handle (G) to adjust the height of the foot.

DANGER

to ensure a strong panel clamping, the foot shall be at a 1 mm height from the panel surface before lowering the lever.

- Use the lever (H) to lower the foot (L) and secure the work-piece in position.

DANGER

always lock the piece using the presser provided.

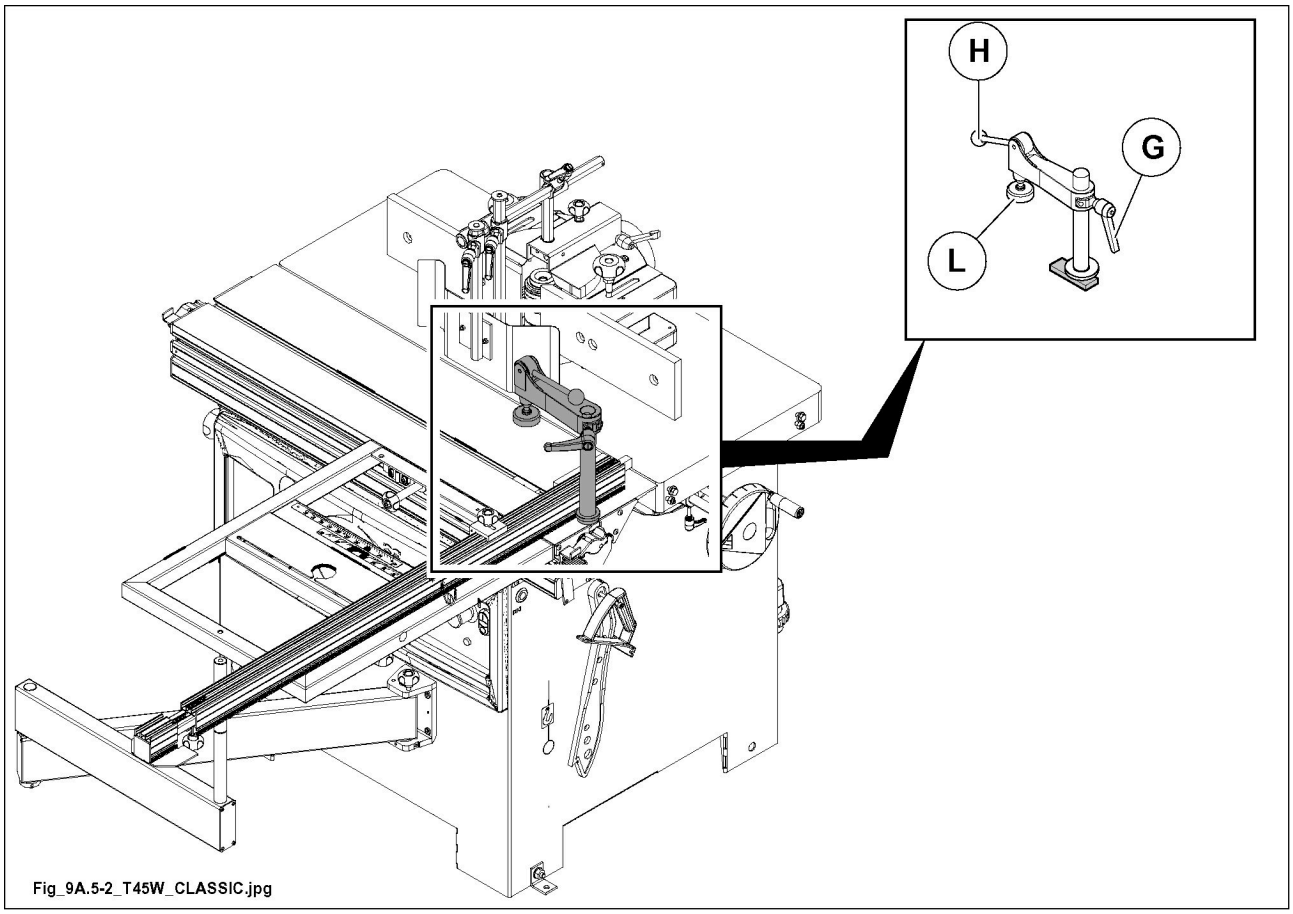

Fig_9A.5-2_T45W_CLASSIC.jpg

7.3.3 Additional rule for oblique cuts with millimeter rule

Available only on the SPINDLE MOULDER model "TW 45C"

1. Release the rule unit by turning (counterclockwise) the column (N);
2. loosen the handle (F);
3. position the rule unit at the correct distance from the spindle moulder blade;
4. to make angular cuts turn the ruler assembly (A) using index (D) as a reference;
5. block by tightening the handle (F);
6. position the presser up against the ruler assembly ensuring that the washer Q is inserted into the groove;
7. block the rule unit by turning (clockwise) the column (N).

The table is already registered; to make further adjustments proceed as follows:

- loosen the levers (G);
- use the grub screws (S) to adjust the parallelism to the sliding table;
- loosen the screws (T) and use the grub screws (U) to adjust the height.

NOTE
when the splinter guard (H) is worn, move it after having loosened the fixing screws.

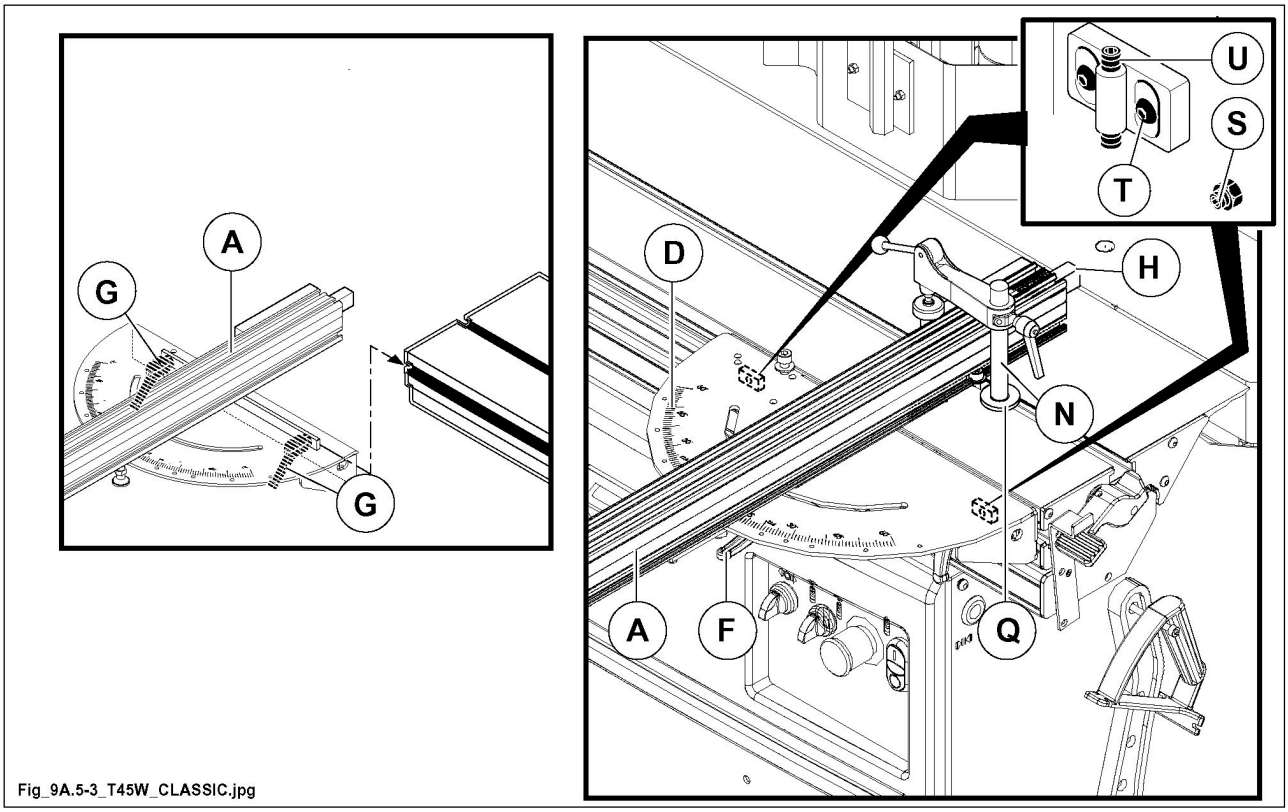

Fig_9A.5-3_T45W_CLASSIC.jpg

7.4 Telescopic rule on the small table to tighten OPT

Available only on the SPINDLE MOULDER model "TW 45C"

NOTE

the splinter guard (not supplied bySCM) is secured to the rule with the screws (V).
When the splinter guard is worn, move it towards the tool by turning the blocking screws.
If necessary replace it see Chapter "Maintenance".

7.4.1 Rule rotation

A

1. Loosen knob (F).
2. Loosen the grub screw (G).
3. Position the telescopic rule (R) at the right distance from the tools (U).
4. Re-tighten the grub screw (G).
5. Tighten the knob (F).

7.4.2 To move the rule close to the tools

B

1. Loosen knob (F).
2. Loosen the grub screw (G).
3. Position the telescopic rule (R) at the right distance from the tools (U).
4. Re-tighten the grub screw (G).
5. Tighten the knob (F).

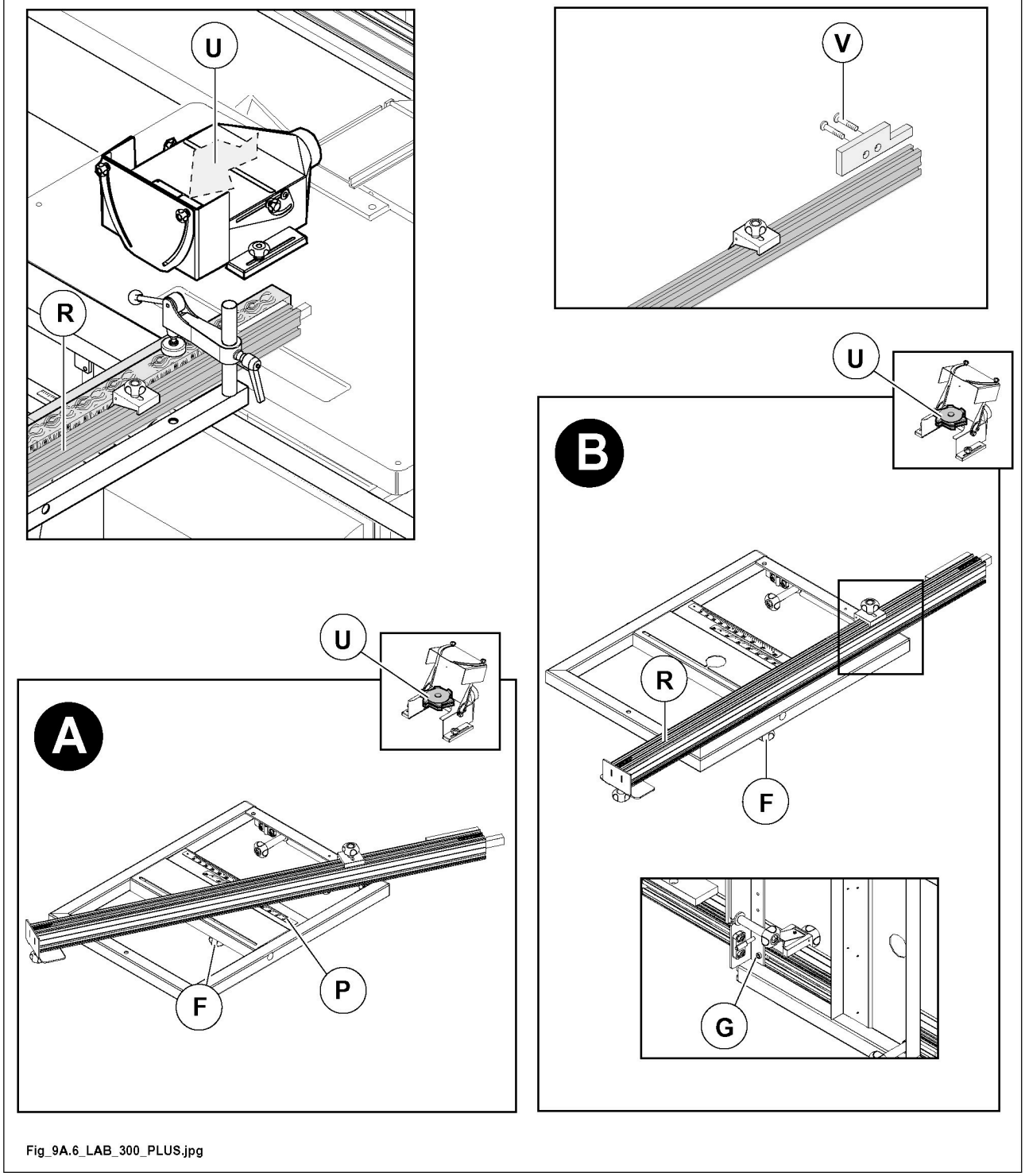

Fig_9A.6_LAB_300_PLUS.jpg

7.5 Use of the tenoning table OPT

Available only on the SPINDLE MOULDER model "TW 45C"

- Tenoning is a head milling operation (against the grain) which is carried out to obtain joints between male tenons (A) and female tenons (B).
- Carry out this operation with sliding table after fitting the tenoning table OPT (O).

DANGER

always lock the piece using the presser provided;

tenoning must exclusively be carried out with a spindle rotation speed of 3500 rpm (50 Hz) - 4200 rpm (60 Hz).

For a better assembly:

- adjust the tenon depth 0.5 mm less than the upright width (X);
- adjust the slot depth 0.5 mm less than the crosspiece width (Y).

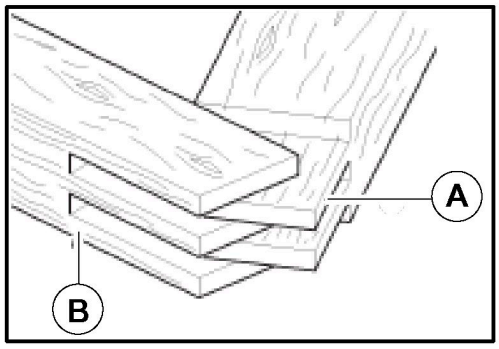

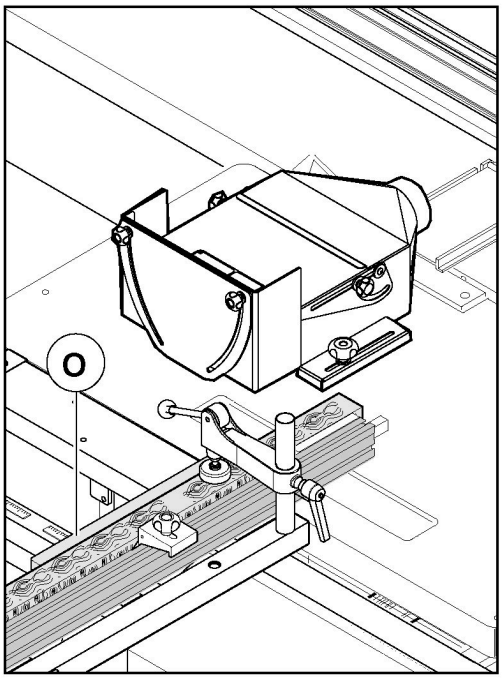

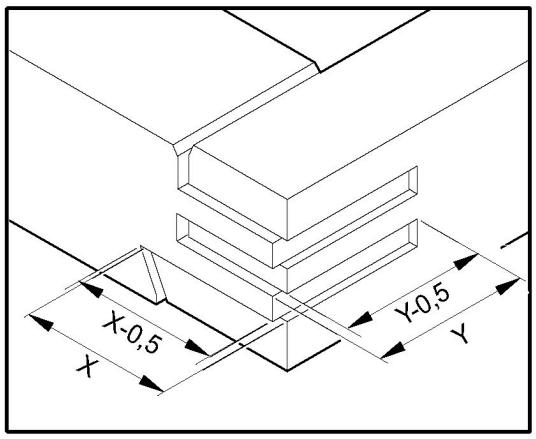

Fig_9A.8_LAB_300_PLUS.jpg

7.5.1 Execution of straight tenons

- Fit the suitable hood for this machining and adjust it as described in paragraph" Tenoning hood ".
- Position the telescopic rule so that the pin (E) goes against the device (S).
  To move the rule loosen the knob (M).
- Rest the workpiece against the rule (G), so that its projection to the tool is larger than the tenoning depth.

DANGER

Make sure that no contact between tenoning table and tool is possible.

- Clamp the workpiece with the presser foot (P) by lowering lever (D)

7.5.1.1 Clamping arm use

- Use the handle (C) to adjust the height.
- Use the lever (D) to lower the foot (P) and lock the piece to be machined.

DANGER

always lock the piece using the presser provided.

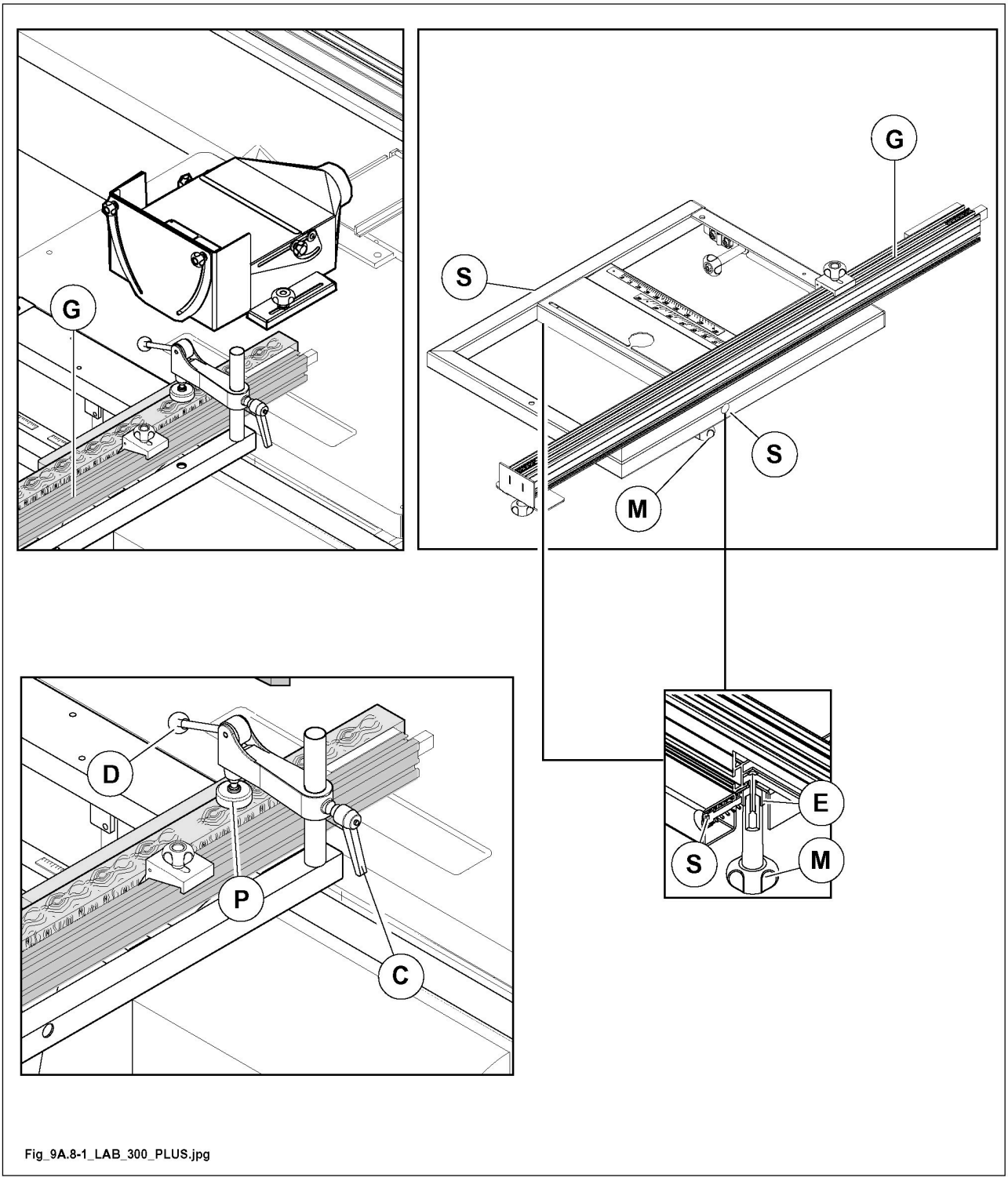

Fig_9A.8-1_LAB_300_PLUS.jpg

7.5.2 Oblique tenons

The machining of oblique tenons is quick, because it is sufficient to turn telescopic support rule (G) clockwise.

- Loosen knob (F).
- Rotate the rule to the desired angle, clockwise (+ / index 1) and read the value directly on the plate (T) positioned on the table.
- Tighten the knob (F).

The rule (G) can slide after unlocking the knob (F).
This further adjustment may be necessary to adjust to the various different cutter diameters.

7.5.2.1 Clamping arm use

- Use the handle (C) to adjust the height.
- Use the lever (D) to lower the foot (P) and lock the piece to be machined.

DANGER

always lock the piece using the presser provided.

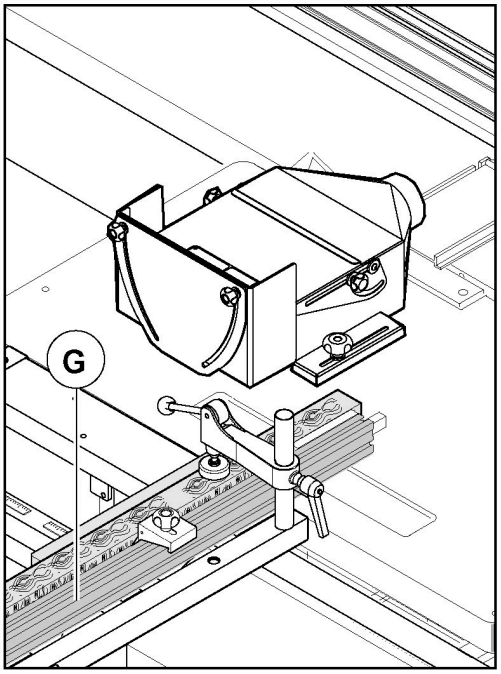

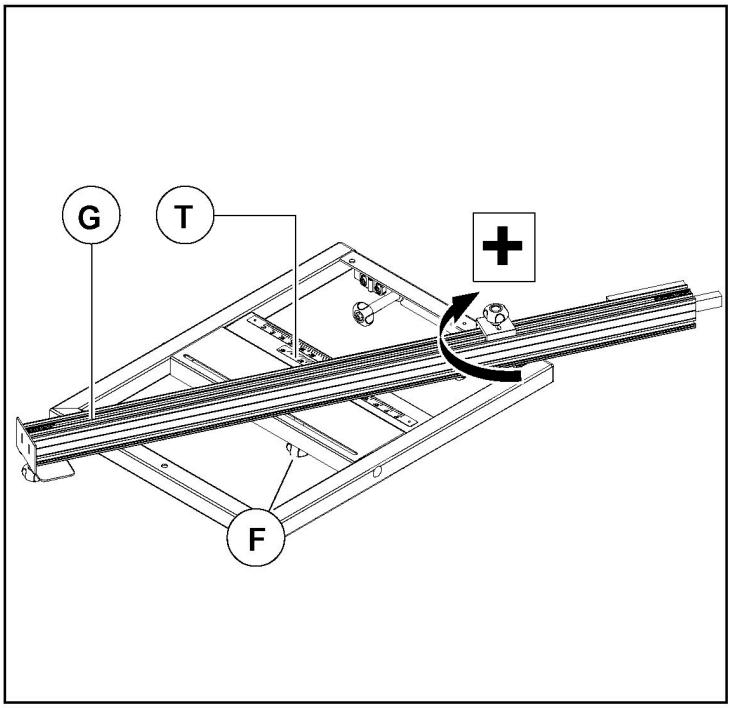

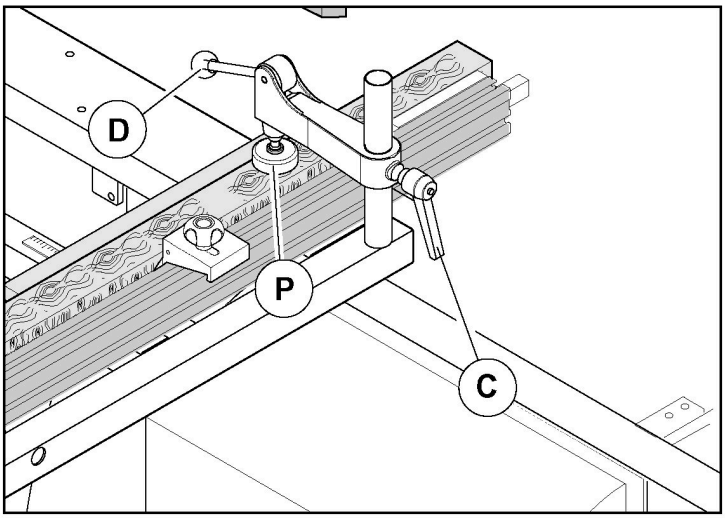

Fig_9A.8-2_LAB_300_PLUS.jpg

7.6 Adjustable Hood-Fence unit

DANGER

All adjusting operations are to be carried out with standstill spindle.

Use proper gloves for handling the tools.

DANGER

Make sure that the moulder spindle speed does not exceed the the max. speed permitted by the tool which is used.

Otherwise see paragraph about speed change.

The tool shall rotate in the right direction.

The pilot lamp on the control board lights up when the tool rotates clockwise.

The operator shall make sure that the spindle can rotate in the direction desired and that the piece feed occurs in the direction contrary to the spindle rotation one.

In case of very long pieces use or table extensions (not supplied by SCM).

Before working, adjust the vertical and horizontal presser to form a guard for your hands and against eventual ejection of splints or tool parts (see par. " Pressure unit for profiling").

Before starting the machine make sure that the tools do not touch the parts of the machine.

After every adjustment always close the top cover of moulder hood.

It is prohibited to mount tools with a diameter greater than indicated in Chap. "Technical specifications".

Machining with the router fence hood should be carried out while keeping the two support tables in their closest possible position, to prevent the tool from carrying the workpiece along. Before proceeding with machining, adjust the spindle hood and the pressers as indicated (Par." Adjustable Hood-Fence unit").

PROHIBITED

DO NOT use the machine without having first checked that the safety protections have been installed correctly and secured with the devices required and in the way indicated in this manual. Before every use, with the machine off and tools stopped, try to move the protection to ensure it is installed correctly and fixed completely.

The positioning and adjustment of the spindle moulder fence changes according to the type of operation to be carried out.

- When profiling the entire side of workpiece half-fence (B) shall be alignad with tool (1).
- If profiling is not done on the entire side, but only on a part, the two fences A and B must be aligned (2). Adjust the guides A and B according to the machining as indicated below.
- Position the hood on the working table and screw the two knobs (C and G) into their special holes.

DANGER

the two fences must be adjusted so the workpiece is stable at both infeed and outfeed.

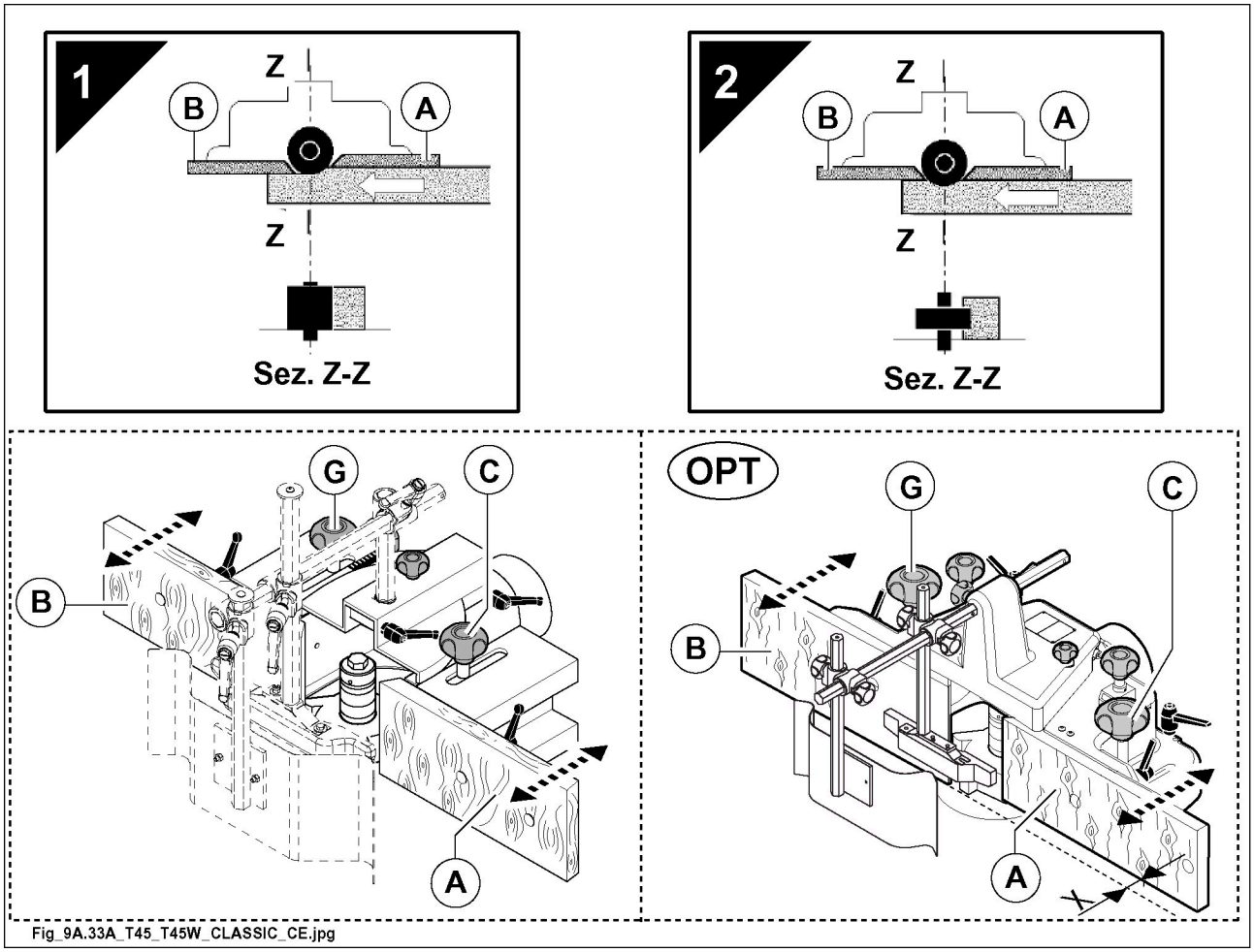

Fig_9A.33A_T45_T45W_CLASSIC_CE.jpg

7.6.1 Use of hood-fence for small pieces

When repetitive or special operations must be carried out, it is recommended to make a counterfence to be applied to the router hood, opened to let the tool through. The counter-guide must be secured to the two tables by means of the 2 convex-head screws and 2 m8 nuts (see figure).

To mill the passage opening proceed in this way:

- set the horizontal pressure shoe (C) in order to protect the operator against eventual ejection of splinters and tool parts.
- Move the entire hood-fence unit backwards very slowly, up to opening of passage.

DANGER

do not use inserts with openings larger than the tool thickness.

DANGER

after each adjustment, always remember to close the upper cover on the moulder hood and position the pressers unit (see par. " Pressure unit for profiling").

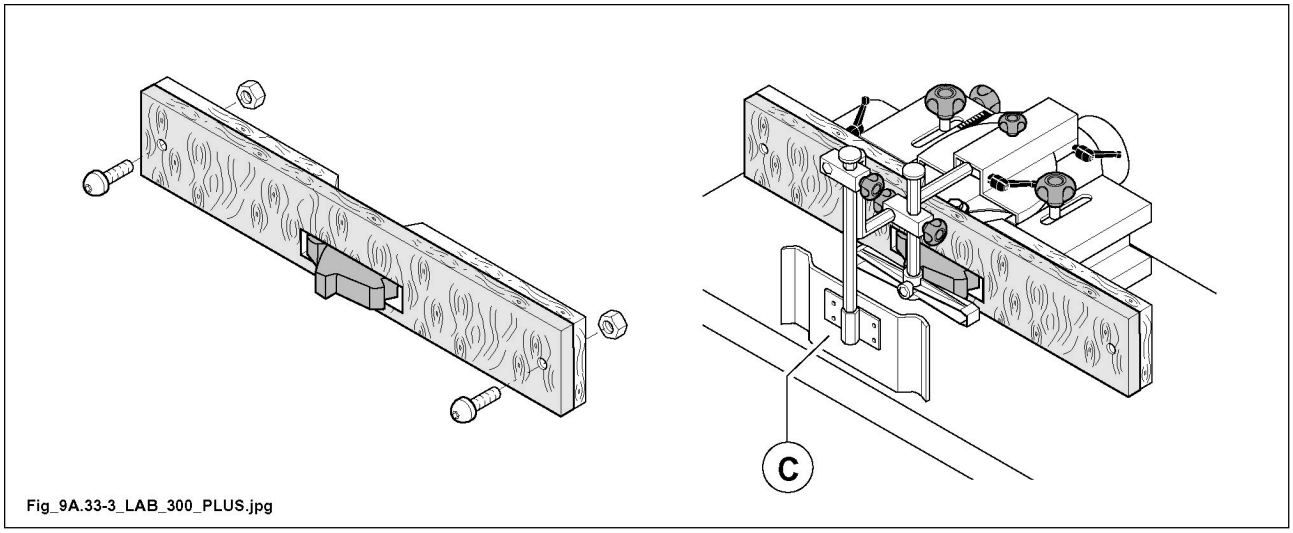

Fig_9A.33-3_LAB_300_PLUS.jpg

7.6.2 Adjust spindle moulder hood guide for moulding without removal

Simultaneous adjustment of the guides A and B.

Standard version

- Adjust fence (A) by means of knob (E) after loosening knob (C).
- Adjust fence (B) by means of knob (E) after loosening knob (G).
- The half-guides (A and B) must be as near the tool as possible (about 2-3 mm). To make this adjustment use the handles (D) behind the half-guides.

NOTE

for this operation the half-guides must be aligned with one another. Read the deviation between the two tables on index (H). When the index is positioned on “0”, the fences are aligned.

- After adjustment, tighten the knobs (C and G).

Three-move version OPT

- Make sure that the lever (H) and the knob (E) are locked.
- Loosen the knobs (G) and (C) and the lever (L).
- Adjust the guides using knob (F).
- The half-guides (A and B) must be as near the tool as possible (about 2-3 mm). To make this adjustment use the handles (D) behind the half-guides.

NOTE

for this operation the half-guides must be aligned with one another.

The value displayed on the indicator (U) corresponds to the distance from the centre of the spindle to the table (B). If the tool is flush with the table (B), this measurement coincides with its radius.

- When the adjustment has been completed, tighten the knobs (G) and (C) and the lever (L).

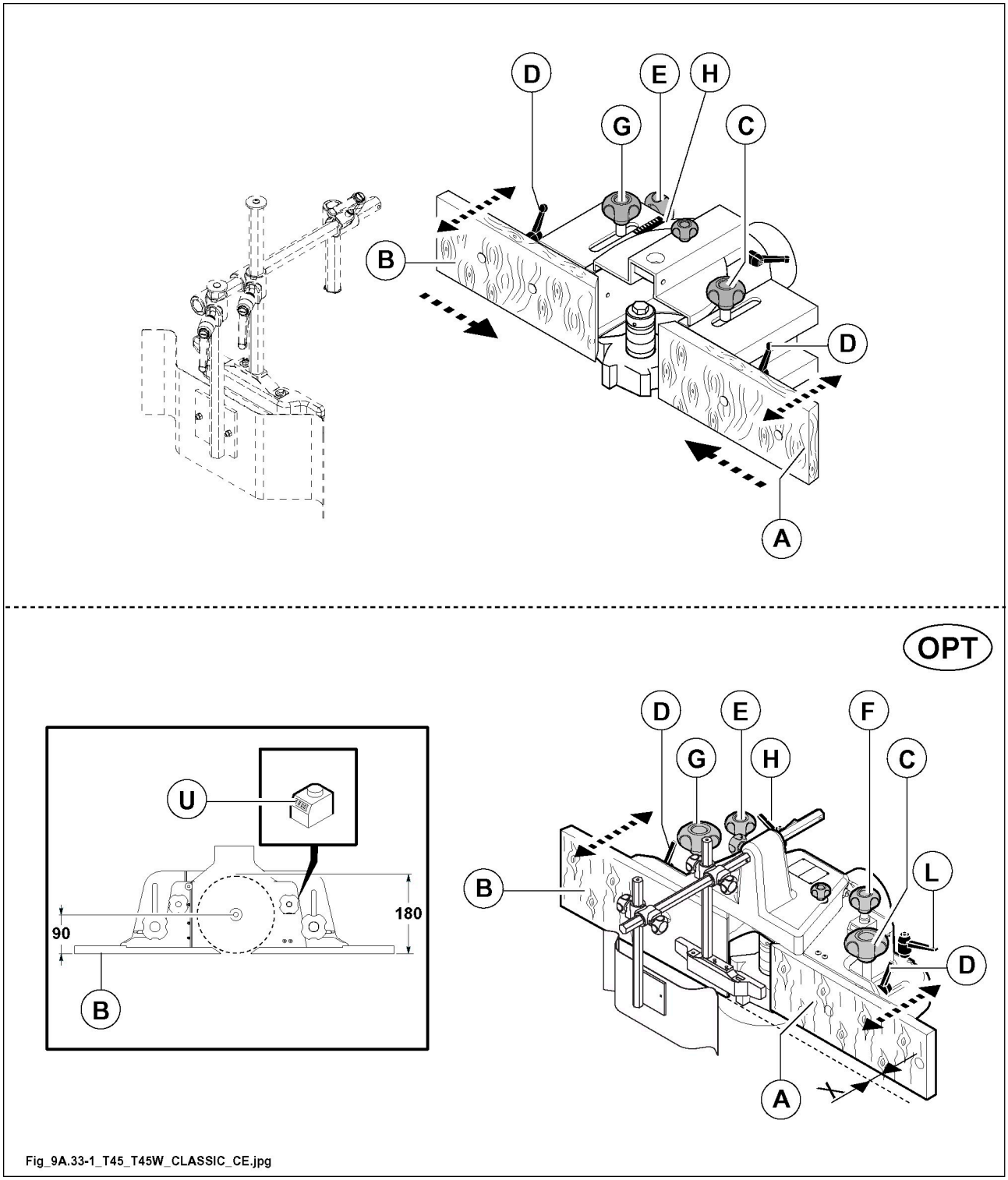

Fig_9A.33-1_T45_T45W_CLASSIC_CE.jpg

7.6.3 Adjust spindle moulder hood guide for moulding with removal

1. After loosening the knobs (G, C) move the entire hood guide to the most suitable position for the depth of cut required, then tighten the knobs.
2. The half-guides (A and B) must be as near the tool as possible (about 2-3 mm). To make this adjustment use the handles (D) behind the half-guides.

For further micrometric adjustment of the cutting depth set the infeed half-guide (A) as follows:

Standard version

1. Loosen the knob (C).
2. Turn the knob (E) to find the correct position, reading the movement on the indicator (H).
3. After adjustment, tighten the knob (C).

Three-move version OPT

1. Make sure the lever (H) and the knob (G) are locked.
2. Loosen the knob (C) and the lever (L).
3. Turn knob (F) to find the correct position, reading the movement on indicator (U).
4. When the adjustment is over, tighten the knob (C) and the lever (L).

For the adjustment of the outfeed half-guide (B), proceed as follows:

Standard version

1. Loosen the knob (G).
2. Turn the knob (E) and with a bar check the alignment of the half-guide with the tool.
3. When the adjustment is over, tighten the knob (G).

Three-move version OPT

1. Make sure the lever (L) and the knob (C) are locked.
2. Loosen the knob (G) and the lever (H).
3. Turn the knob (E) and with a bar check the alignment of the half-guide with the tool.
4. When the adjustment is over, tighten the knob (G) and the lever (H).

NOTE

Standard version

- read the deviation between the two tables on index (H). When the index is positioned on “0”, the fences are aligned.

Three-move version OPT

- for this operation the half-guides must be aligned with one another.
  The value displayed on the indicator (U) corresponds to the distance from the centre of the spindle to the table (B). If the tool is flush with the table (B), this measurement coincides with its radius.

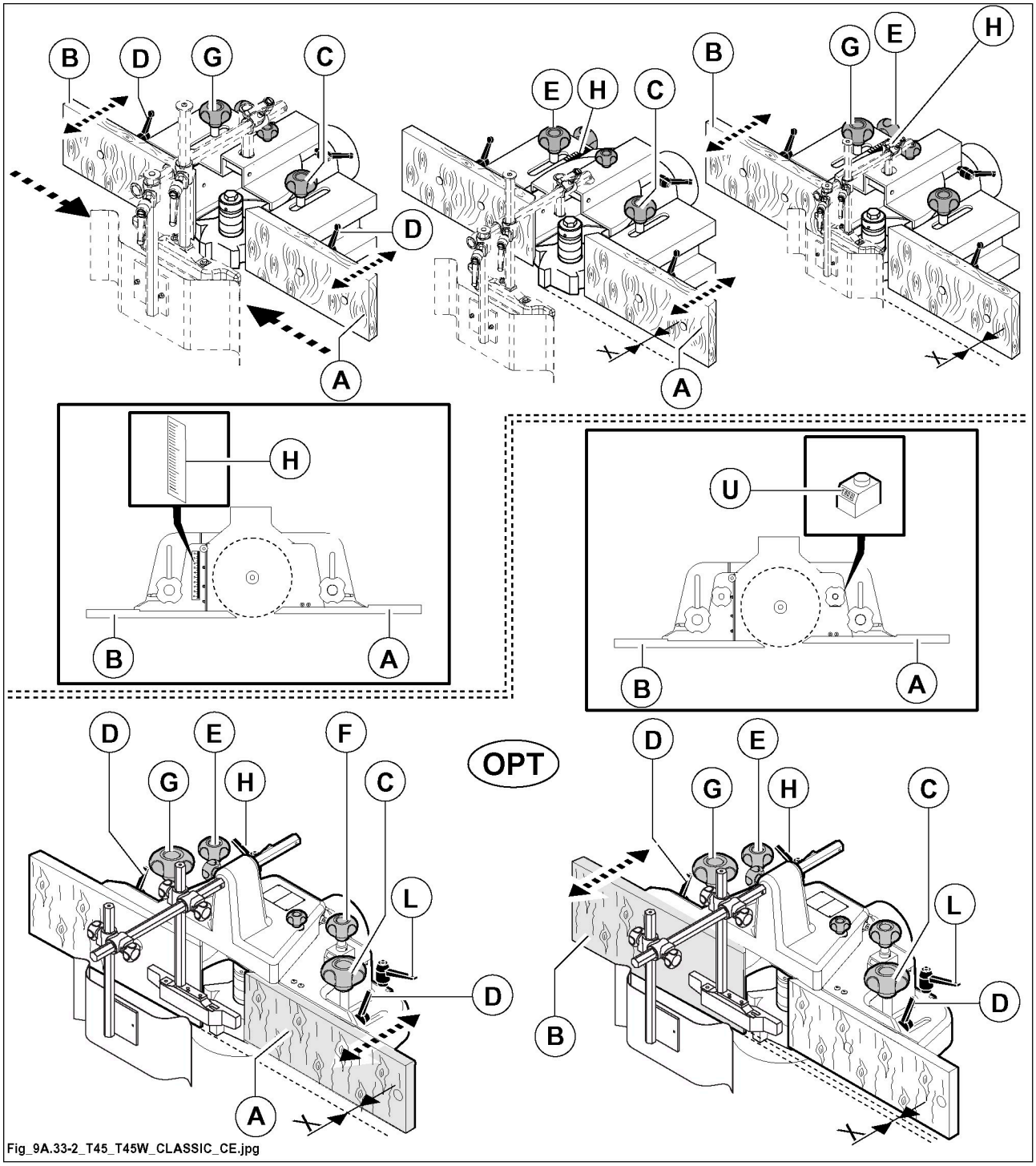

Fig_9A.33-2_T45_T45W_CLASSIC_CE.jpg

7.6.4 Hood-fence adjusting for profiling with rotation direction reversal

DANGER

The machine is equipped with spindle rotation reversal (spindle rotation clockwise).

NOTE

The pilot lamp on the control board lights up when the tool rotates clockwise (that is in feed direction).

DANGER

Avoid this direction of rotation (see figure) as much as possible; the milling tool turns "in the same direction as the normal feed direction".

Make sure that the workpiece feed occurs in the direction opposite to the cutter rotation direction..

DANGER

NEVER make the workpiece feed in the tool rotation direction because there is the risk that the workpiece is withdrawn by the pressure shoe.

DANGER

All adjusting operations are to be carried out with standstill spindle.

Set the pressure shoes (see paragraph" Pressure unit for profiling").

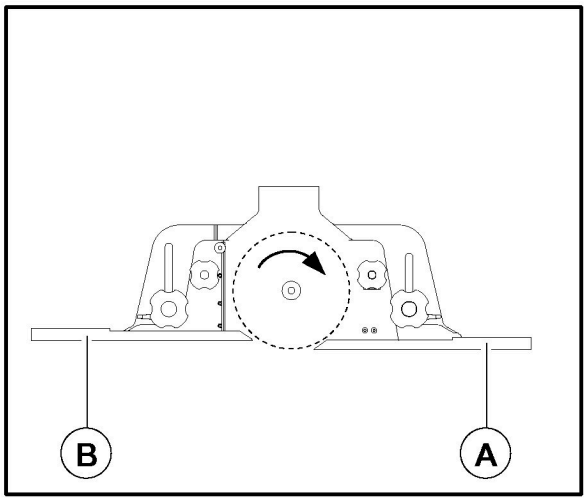

Fig_9A.33-4_CU410_ELITE_S.jpg

Standard version

1. After loosening the knobs (G, C) move the entire hood guide to the most suitable position for the depth of cut required, then tighten the knobs.
2. The half-guides (A and B) must be as near the tool as possible (about 2-3 mm). To make this adjustment use the handles (D) behind the half-guides.

For further micrometric adjustment of the cutting depth set the infeed half-guide (A) as follows:

1. loosen the knob (C).
2. Turn the knob (E) to find the correct position, reading the movement on the indicator (H).
3. After adjustment, tighten the knob (C).

For the micrometric adjustment of the outfeed half-guide (B):

1. loosen the knob (G).
2. Turn the knob (E) and with a bar check the alignment of the half-guide with the tool.
3. After adjustment, tighten the knob (G).

DANGER

the two fences must be adjusted so the workpiece is stable at both infeed and outfeed.

NOTE

read the deviation between the two tables on index (H). When the index is positioned on “0”, the fences are aligned.

As regards the machine start see Chapter"Commands".

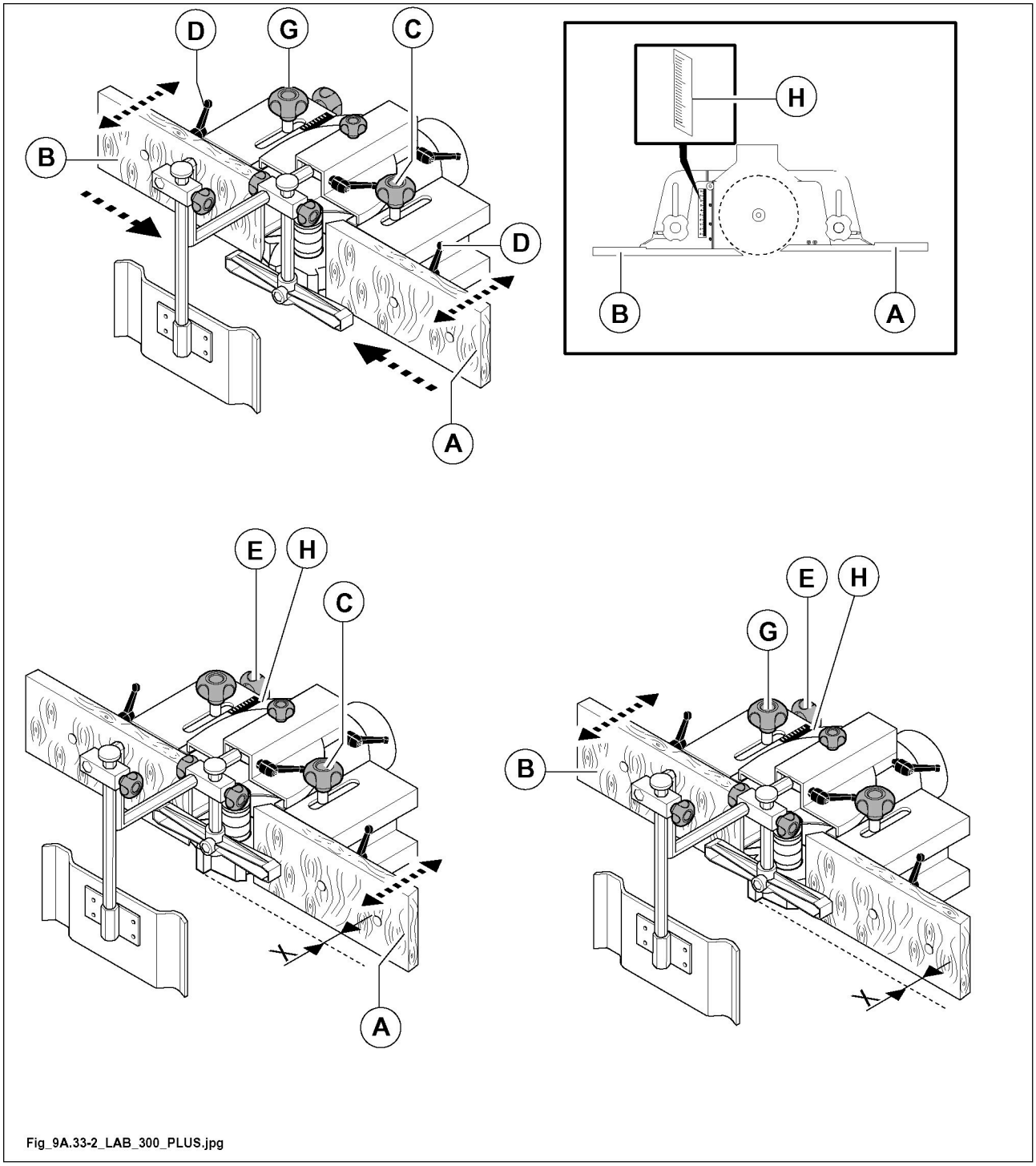

Fig_9A.33-2_LAB_300_PLUS.jpg

Three-move version OPT

In this configuration, it is possible to retract the outfeed guide (B) by up to 5 mm.

1. After loosening the knobs (G, C) move the entire hood guide to the most suitable position for the depth of cut required, then tighten the knobs.
2. The half-guides (A and B) must be as near the tool as possible (about 2-3 mm). To make this adjustment use the handles (D) behind the half-guides.

For a further micrometric adjustment of the cutting depth, set the half-guide (B) as follows:

1. loosen handle (T).
2. Unscrew the adjustment by rotating the knob (R) in an anticlockwise direction.
3. Rotate the knob (P) clockwise to obtain the desired retraction of the guide (B).
4. Lock the handle (T).

For the micrometric adjustment of the half-guide (A):

1. make sure that the lever (H) and the knob (G) are locked.
2. Loosen the knob (C) and the lever (L).
3. Turn the knob (F) and with a bar check the alignment of the half-guide with the tool.
4. When the adjustment is over, tighten the knob (C) and the lever (L).

To realign guides:

1. loosen handle (T).
2. Turn the knob (P) counterclockwise until it stops.
3. Turn the knob (R) clockwise until it stops.
4. Retract the guide (B) rotating the knob (P) clockwise to the stop.
5. Lock the handle (T).



DANGER

the two fences must be adjusted so the workpiece is stable at both infeed and outfeed.

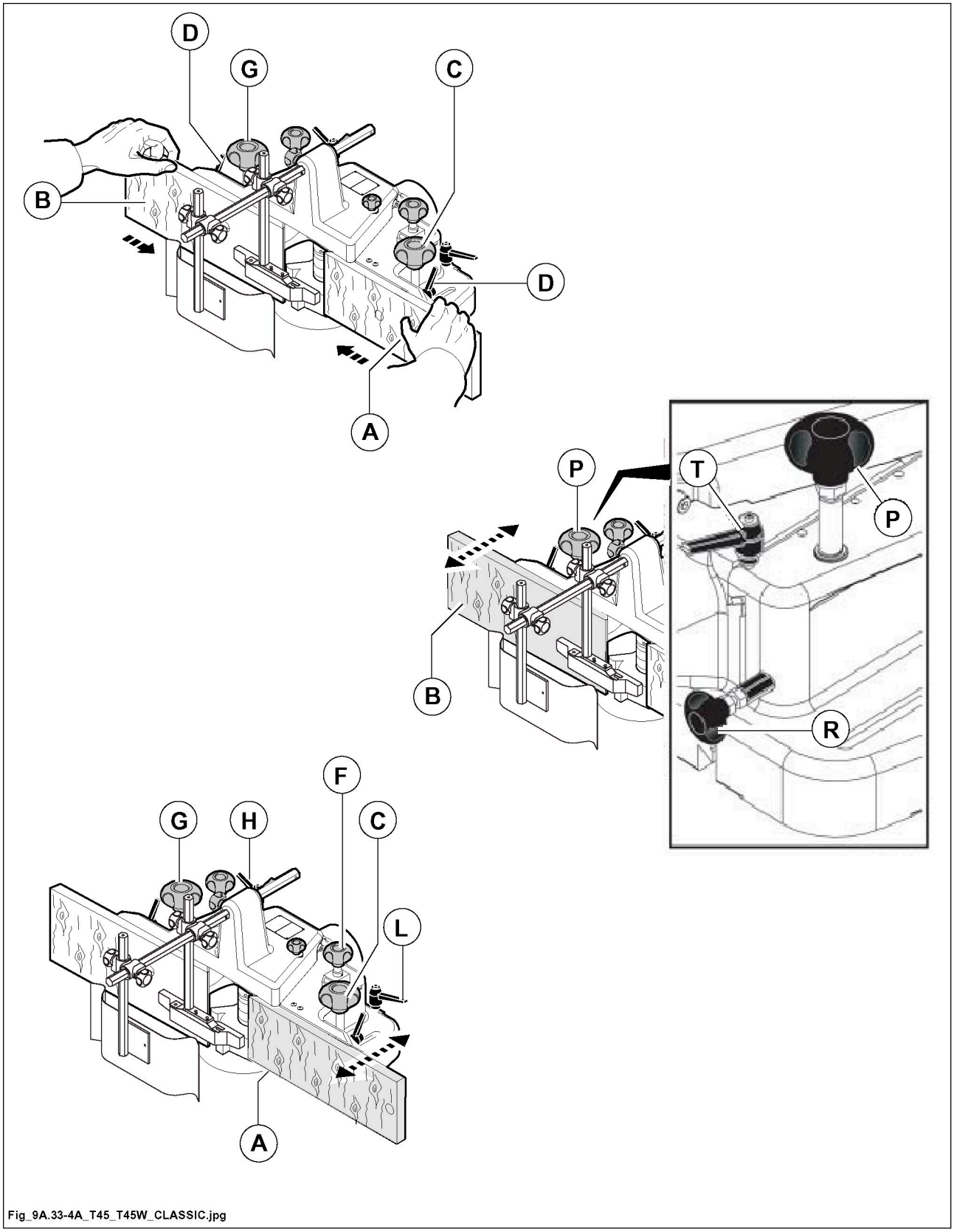

Fig_9A.33-4A_T45_T45W_CLASSIC.jpg

7.6.5 Working examples

7.6.5.1 Profile

Profile

It is carried out along the grain on straight pieces During the feed motion the entire workpiece shall be in contact with both half-fences of the moulder fence.

- Start the system and machine asample workpiece
- Check the profile height and depth using a gauge.
  A good finishing requires a milling with constant feed.

CAUTION

before proceeding with the machining, adjust the spindle hood and the pressers as indicated in paragraph" Adjustable Hood-Fence unit". Before starting work check the various fittings.

Connect the fitting (4) to the extraction system.

DANGER

the piece being machined must always be fed using the wood thrust provided (A).

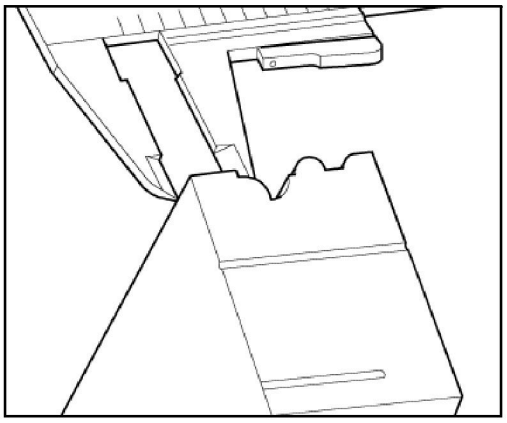

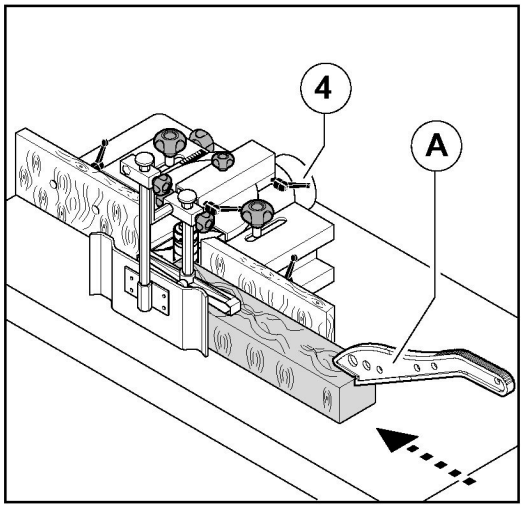

Fig_9A.33-5A_LAB_300_PLUS.jpg

Profiling with tilting spindle (OPT) (only on model "TW 45c")

This type of machining allows the production of different profiles using the same tools. Prepare the machine for machining as follows:

- install the hood (G);
- remove if necessary the rings on the table that prevent tilting of the spindle;
- mount the tools on the spindle (see Chap. "Installation").

DANGER

machining with the tilting spindle must only be carried out with a tool with a maximum diameter of 150 mm.

- Adjust the height and tilting of the spindle moulder (see Chap. "Using and adjusting the spindle");
- adjust the machining depth by acting on the spindle moulder guides (see Chap. "Using and adjusting the spindle").

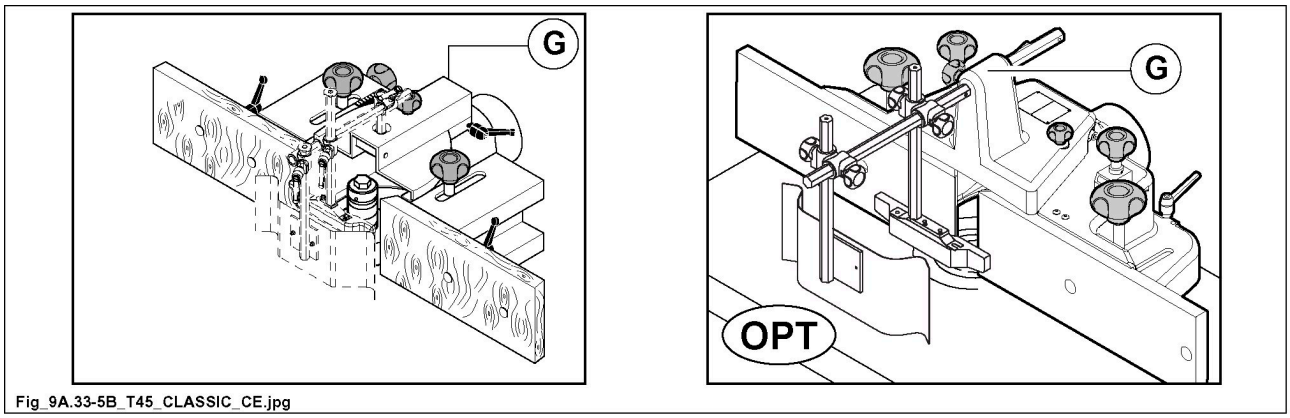

Fig_9A.33-5B_T45_CLASSIC_CE.jpg

Tilting +45° (OPT): profile of the platform (K) in the sides

With a shaft perpendicular to the table and with a specially shaped tool (U), the following occurs:

- the tool peripheral speed in point (B) is much higher than in point (A), since R1<R2.

This could result in a difference in finish over the entire surface A - B or even burns. With a spindle tilting at + 45° (see Figure Detail "1") this difference in finish is minimised as R1 ~ R2, using a suitable shaped tool.

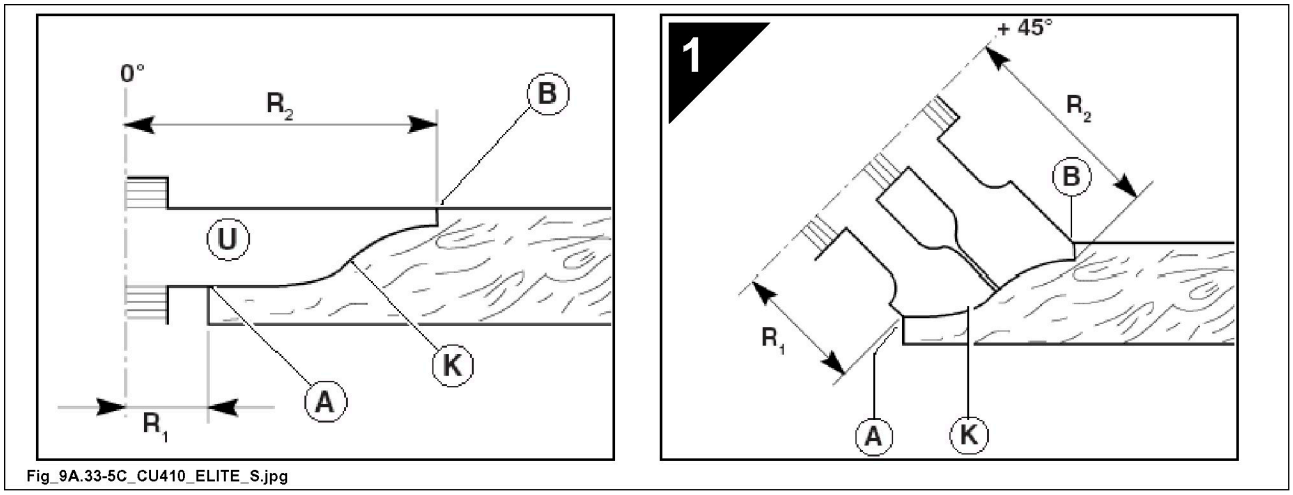

Fig_9A.33-5C_CU410_ELITE_S.jpg

For dead milling cuts (H) and the machining of short pieces, it is necessary to fit the stops (A) and (B) (not supplied) onto the input fence and the half-fence. These must be fastened onto the guides (D) with the screws (C).

To perform the machining, proceed as follows:

- prepare the machine;
- start the moulder shaft;
- rest wood piece against the stops (A) and push it against the milling tool;
- move the piece forward to the stop (B).

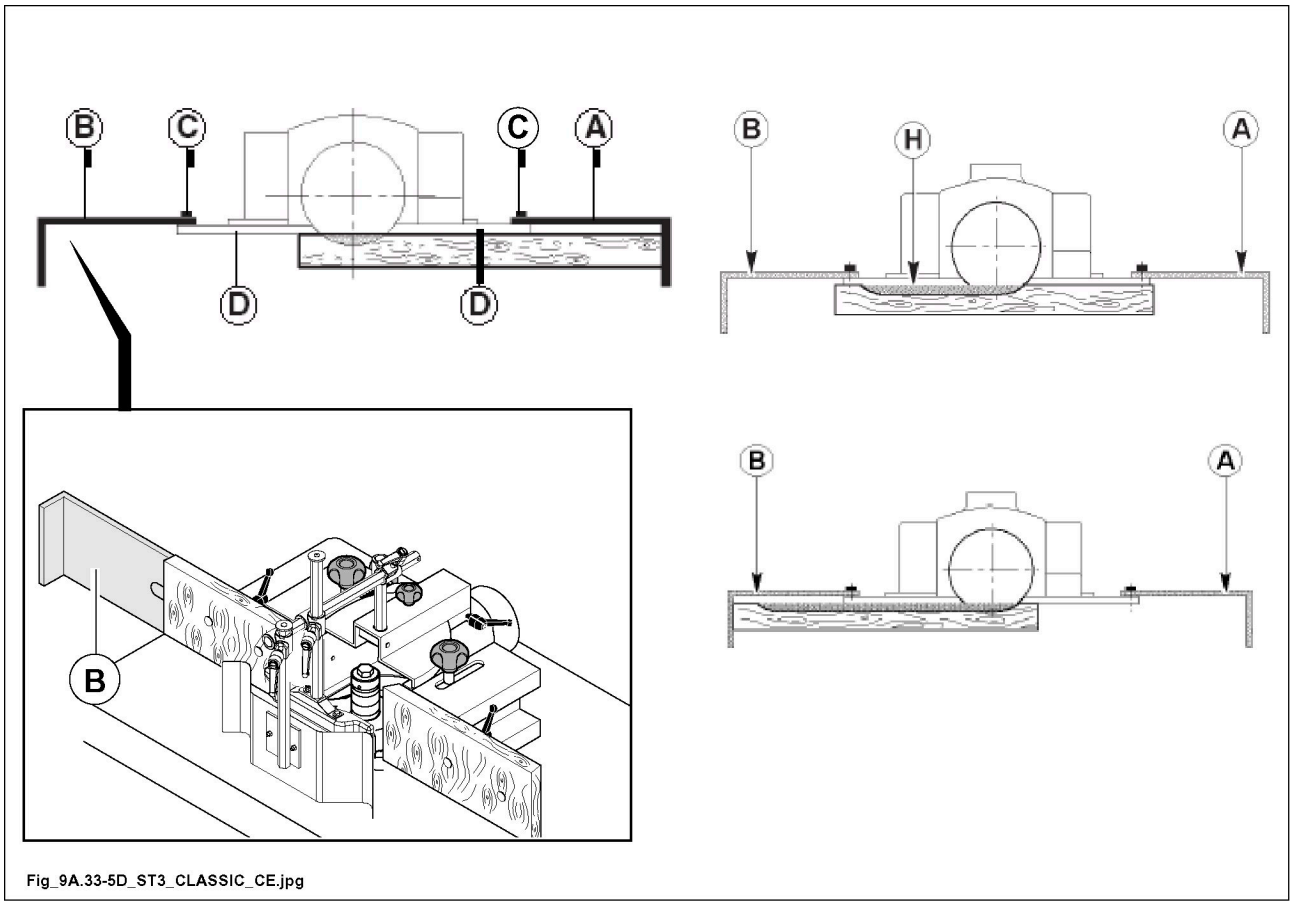

Fig_9A.33-5D_ST3_CLASSIC_CE.jpg

7.6.5.2 Rabbeting

It is the external profiling (P) of a frame.

This operation may be carried out with the workpiece on the machine table and against the moulder fence or clamped to the sliding table.

It is better to begin from a crosspiece then turn the frame 90° every time in order to eliminate the chipping obtained in the previous stroke, then work the jamb in the wood grain direction (see Figure Detail "1").

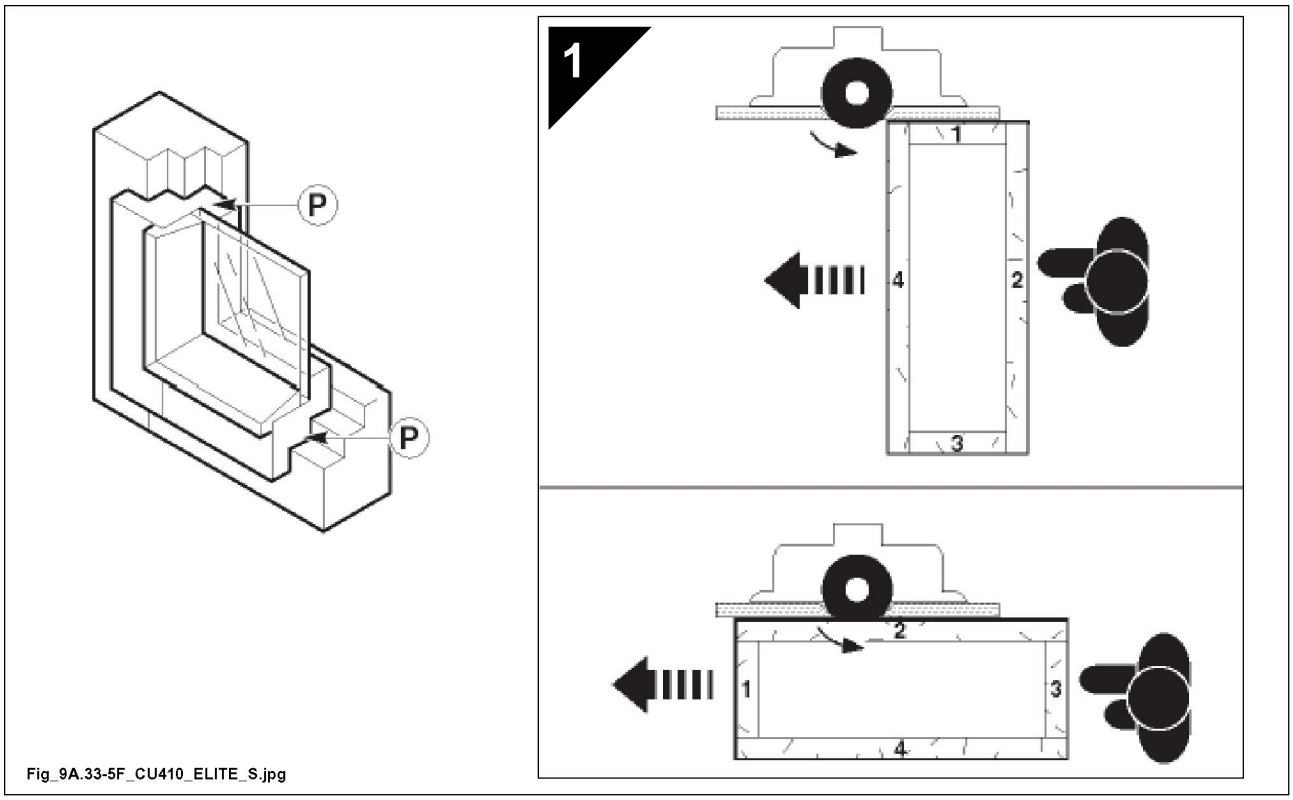

Fig_9A.33-5F_CU410_ELITE_S.jpg

7.6.6 Hood-fence unit adjusting for working at the front end OPT

PROHIBITED

For this type of machining it is forbidden to perform through routing.

NOTE

This working type requires the interchangeable moulding spindle OPT with collet for fitting cutters with cylindrical shank.

For this type of machining, place the hood guide in POSITION 2 (see Paragraph " Fitting guards").

Simultaneous adjustment of guides (A) and (B).

Standard version

- Adjust fence (A) by means of knob (E) after loosening knob (C).
- Adjust fence (B) by means of knob (E) after loosening knob (G).
- The half-guides (A) and (B) must be as near the tool as possible (about 2-3 mm). To make this adjustment use the handles (D) behind the half-guides.

NOTE

for this operation the half-guides must be aligned with one another.

Read the deviation between the two tables on index (H). When the index is positioned on “0”, the fences are aligned.

- When the adjustment has been completed, tighten the knobs (C) and (G).
- Before starting the working adjust guards (Q - R - S) in order to protect the operator against eventual ejection of splints or tool parts.

Three-move version OPT

- Make sure that the lever (H) and the knob (E) are locked.
- Loosen the knobs (G) and (C) and the lever (L).
- Adjust the guides using knob (F).
- The half-guides (A) and (B) must be as near the tool as possible (about 2-3 mm). To make this adjustment use the handles (D) behind the half-guides.

NOTE

for this operation the half-guides must be aligned with one another.

The value displayed on the indicator (U) corresponds to the distance from the centre of the spindle to the table (B). If the tool is flush with the table (B), this measurement coincides with its radius.

- When the adjustment has been completed, tighten the knobs (G) and (C) and the lever (L).
- Before starting the working adjust guards (Q - R - S) in order to protect the operator against eventual ejection of splints or tool parts.

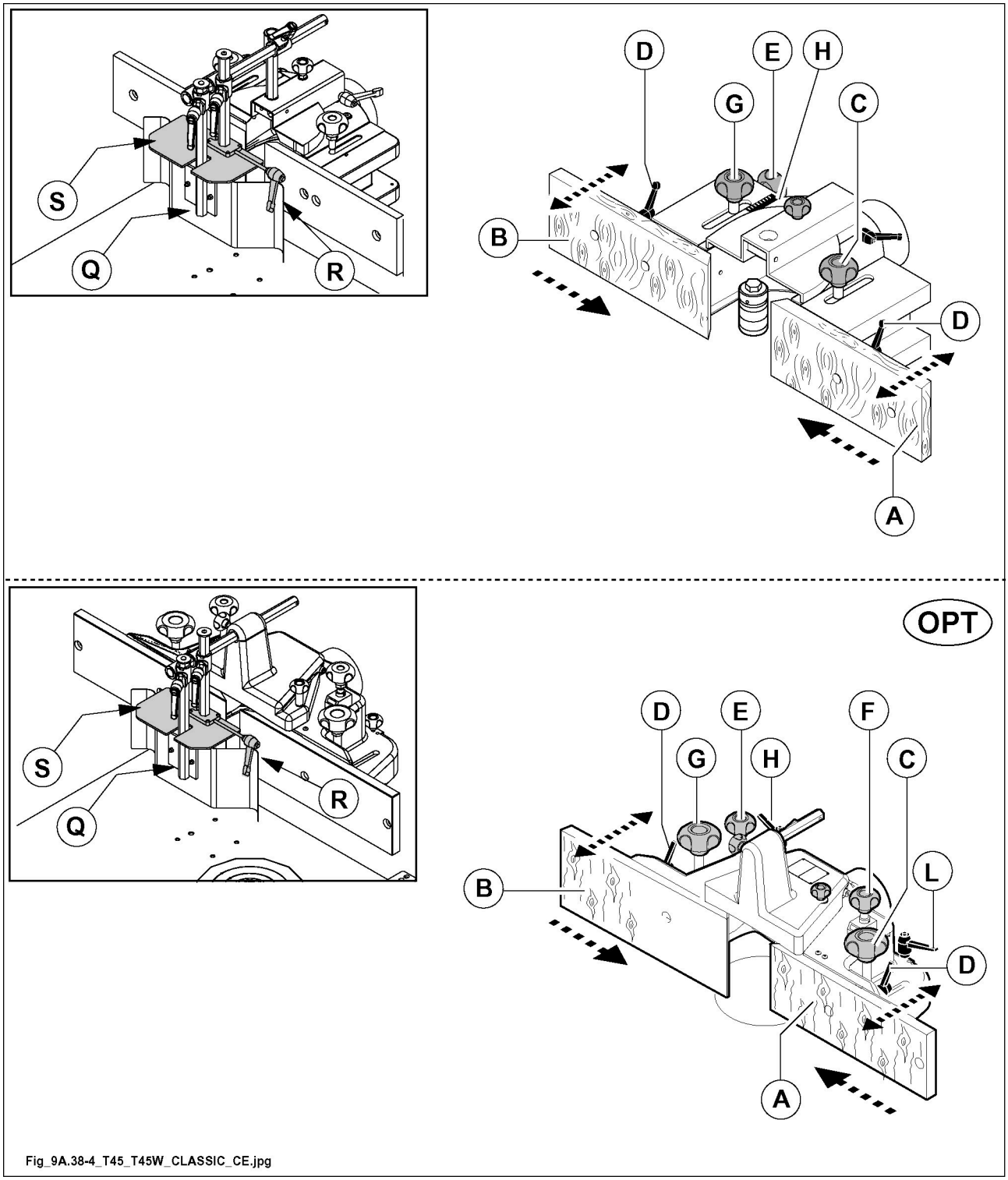

Fig_9A.38-4_T45_T45W_CLASSIC_CE.jpg

7.7 Tenoning hood OPT

Description

Available only on the SPINDLE MOULDER model "TW 45C"

(1)	Hood locking knobs on the table
(2)	Knobs to lock the shield
(3)	Cover
(4)	Suction mouth Ø 120mm
(5)	Shield
(6)	Knobs to lock the lid

7.7.1 Adjusting

DANGER

All adjusting operations are to be carried out with standstill spindle.

1. Rest the hood on the table in the correct position for the milling depth required, then fasten it by tightening the knobs (1).
2. To protect the upper part of the tool, adjust the upper part of the hood with the knobs (6).

DANGER

Use proper gloves for handling the tools.

Before starting the machine close the cover (3).

Make sure that the tools do not touch any machine part.

PROHIBITED

DO NOT use the machine without having first checked that the safety protections have been installed correctly and secured with the devices required and in the way indicated in this manual. Before every use, with the machine off and tools stopped, try to move the protection to ensure it is installed correctly and fixed completely.

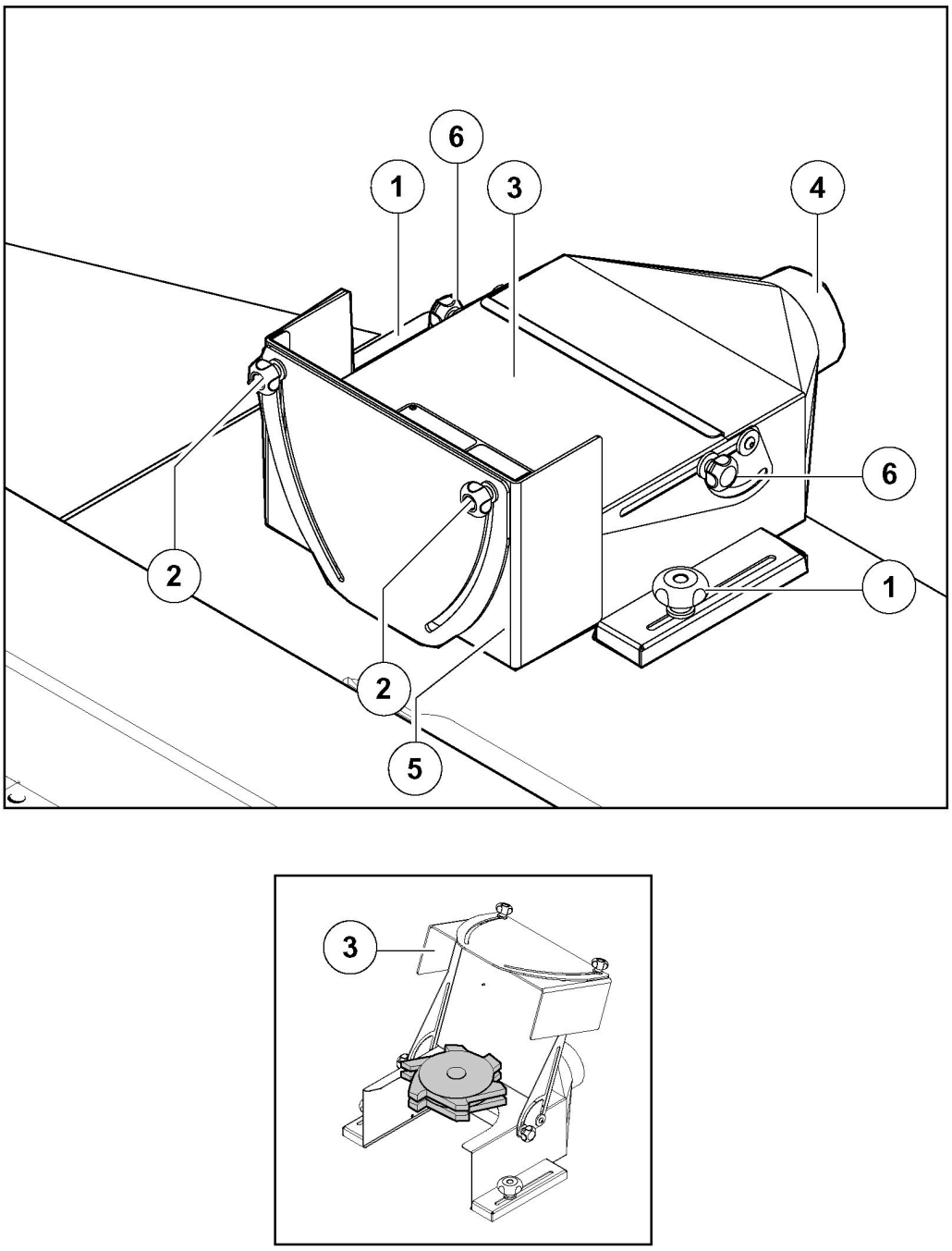

Fig_9A.44_LAB_300_PLUS.jpg

7.8 Pressure unit for profiling

The unit is composed of:

1. Horizontal presser.
2. Vertical presser.
3. Support.
4. Presser adjustment handle.
5. Presser adjustment handle.
6. Presser adjustment handle.
7. Pusher.

DANGER

The vertical and horizontal pressure shoes , fastened to the support, are an efficient protection for the operator's hands and against the eventual ejection of splits or tool parts.

DANGER

All adjusting operations are to be carried out with standstill spindle.

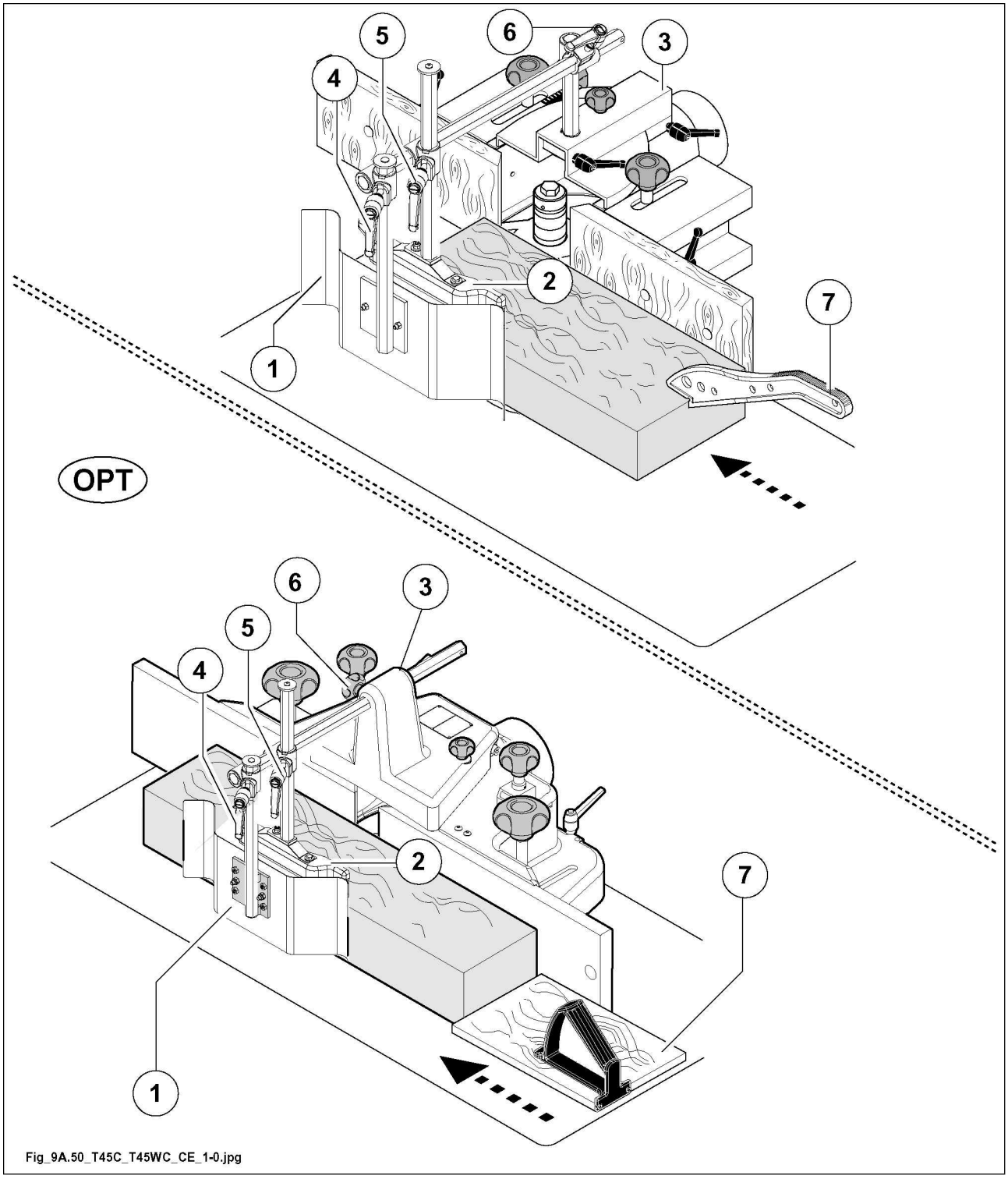

Fig_9A.50_T45C_T45WC_CE_1-0.jpg

7.8.1 Adjusting

Before working adjust the pressure exerted by vertical and horizontal pressure shoes.

The workpiece shall easly move without shocks between pressure shoes and fence halves, therefore the pressure shall be not too strong.

- Adjust the half-guides (A and B) based on the external diameter of the tool.
- Adjust the position of the horizontal presser (1) and the vertical presser (2) resting it on the piece to be machined and proceed as follows:

Standard version

- Loosen the handle (G) and transversally adjust the presser (1) on the basis of the width of the wood to be machined.
- Lock the handle when adjustment has been completed.
- Loosen the handle (M) and position the vertical presser (2) on the wood maintaining it is close as possible to the milling tool.
- Tighten the handle (M) once the adjustment has been made.

Three-move version OPT

- loosen the knob (G) and transversally adjust the presser (1) according to the width of the wood to be machined.
- Tighten the knob when adjustment has been completed.
- Loosen the handle (M) and position the vertical presser (2) on the wood maintaining it is close as possible to the milling tool.
- Tighten the handle (M) once the adjustment has been made.

Adjust the pressure shoes in order to protect the operator against eventual ejection of splits or tool parts.

CAUTION

if the horizontal presser (1) does not rest on the piece being machined with both contact areas (P1 and P2), it must be adjusted to restore the parallelism between the presser and the guides (A and B) of the spindle hood. Proceed as indicated in the next paragraph.

NOTE

Standard version

- after every adjustment make sure that the handles are tight.

Three-move version OPT

- after every adjustment make sure that the handles and the knob are tight.

DANGER

use flat pusher (9) to make the piece passage under horizontal presser (1) easier.

NOTE

the min. section of the workpiece which may be pressed is 8x8 mm on the entire length.

SPECIALISED PERSONNEL

use proper gloves for handling the tools.

Release the spindle motor brake.

Turn the tool after carrying out all adjustments in order to avoid any contact with machine parts or with the guard.

Lock the motor brake again.

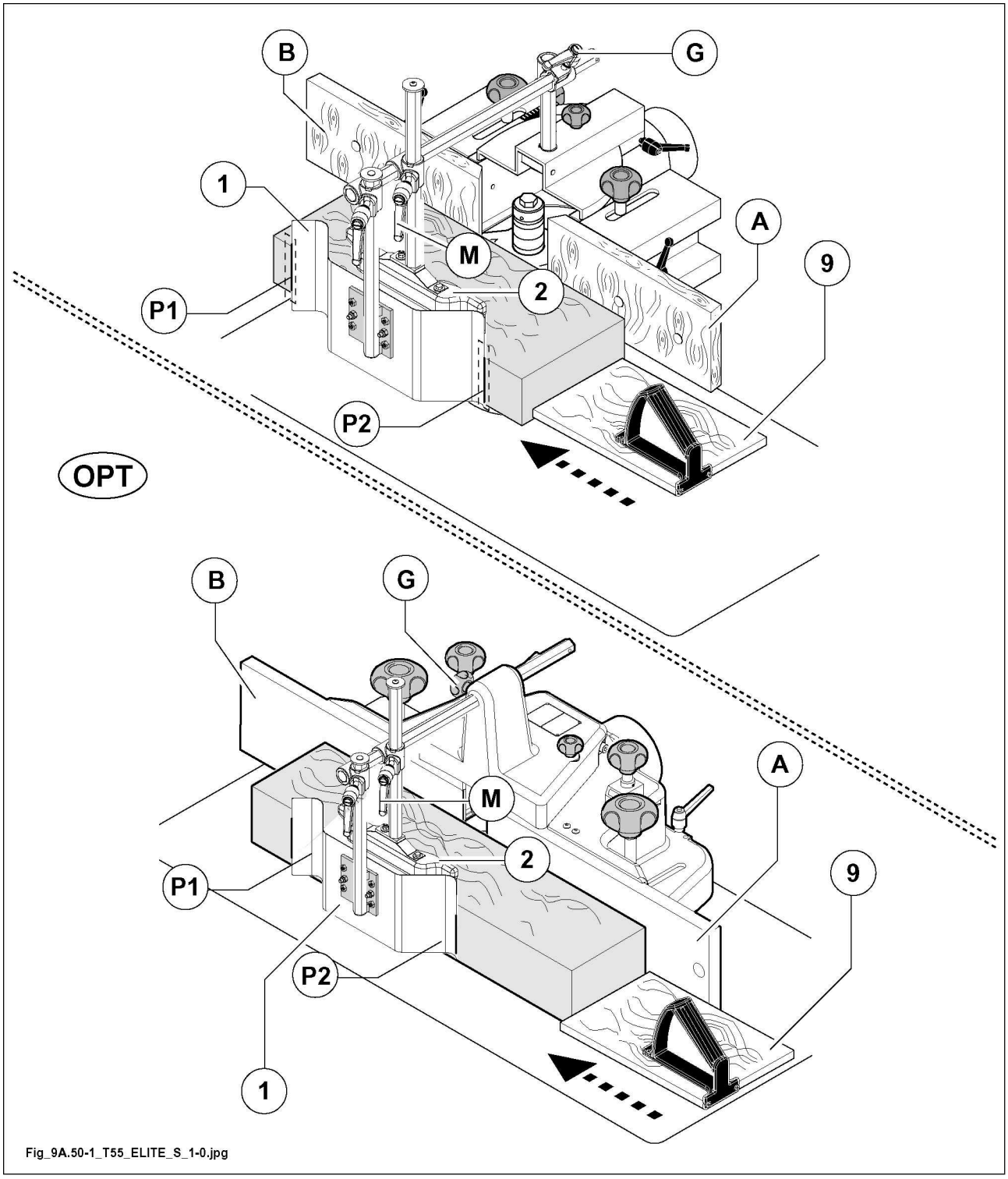

Fig_9A.50-1_T55_ELITE_S_1-0.jpg

7.8.2 Adjusting the horizontal presser

CAUTION

if the horizontal presser (1) does not rest on the piece being machined with both contact areas (P1 and P2), it must be adjusted to restore the parallelism between the presser and the guides (A and B) of the spindle hood.

Proceed as indicated below.

- Loosen the self locking nuts (D).
- Loosen screws (V)
- Loosen the nuts (d1, d2, d3, d4) and adjust the 4 adjustment grub screws (g1, g2, g3, g4) so that the horizontal presser (1) is parallel to the guides (A and B) of the spindle hood
- Tighten the nuts (d1, d2, d3, d4)
- Tighten the screws (V) until the washers (R) are slightly tightened against the presser (1).
  DO NOT force the tightening to avoid damaging the presser.
- Tighten the self locking nuts (D).

NOTE

once the presser (1) and the guides (A and B) of the spindle are parallel, adjust the pressure exercised by the pressers and perform all the safety checks as indicated in the previous paragraph (see Par. " Adjusting").

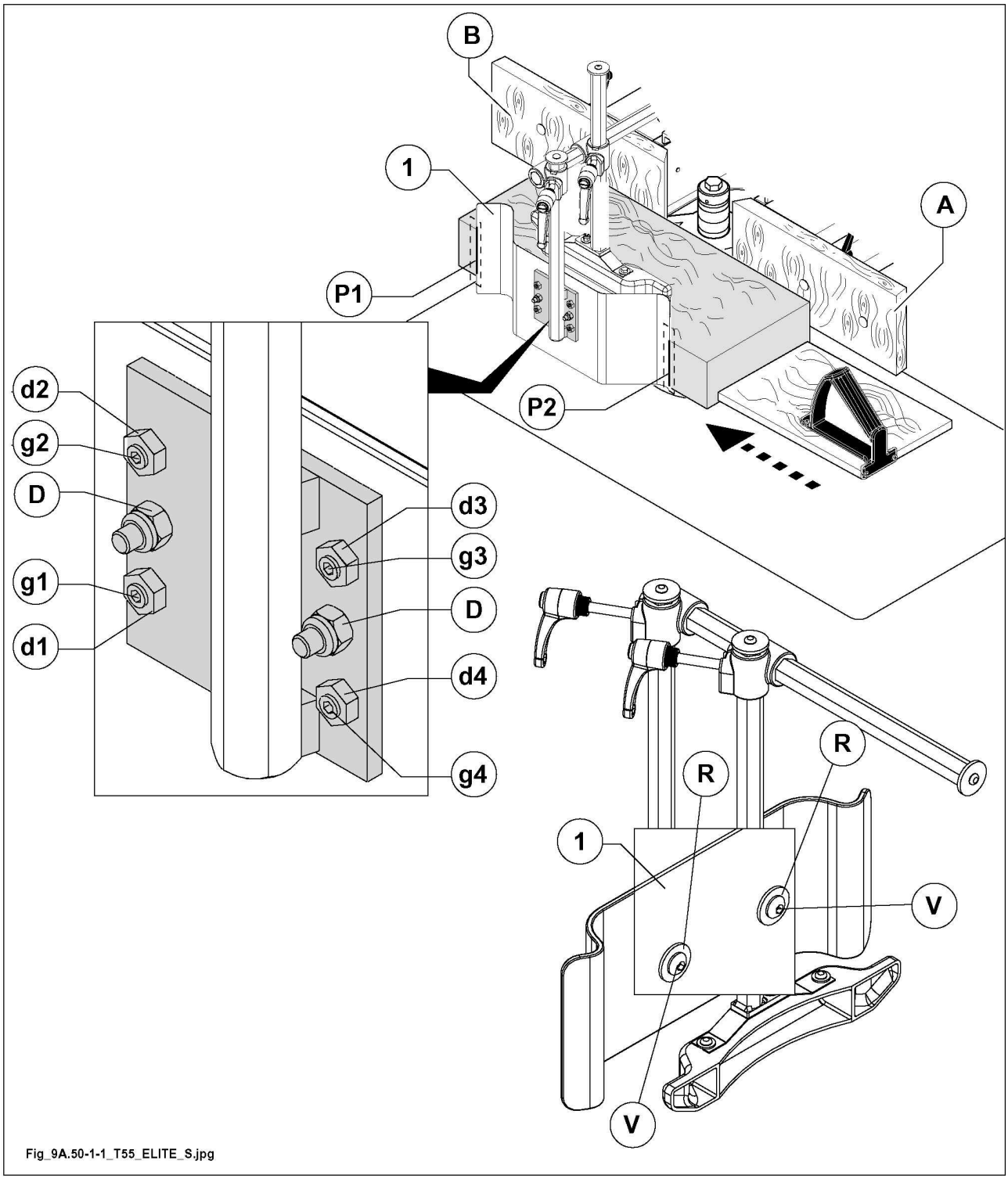

Fig_9A.50-1-1_T55_ELITE_S.jpg

7.9 Guard for milling at the spindle

This device (supplied as a standard accessory (STD)) is used for milling pieces with shaped, curved edges or ring-shaped edges.

The right use permits shaping operations in safe conditions.

ALWAYS WEAR THE FOLLOWING INDIVIDUAL PROTECTIVE EQUIPMENT (IPE) (NOT SUPPLIED BY) BEFORE STARTING TO WORK:

a) **Proper aprons, e.g: aprons made of double leather with synthetic fiber cloth insertion (not supplied by** SCM**) to protect the operator in case of splinters ejection.**
b) **Goggles to protect eyes (or use suitable screens).**

PROHIBITED

DO NOT use the machine without having first checked that the safety protections have been installed correctly and secured with the devices required and in the way indicated in this manual. Before every use, with the machine off and tools stopped, try to move the protection to ensure it is installed correctly and fixed completely.

7.9.1 Adjusting

DANGER

All adjusting operations are to be carried out with standstill spindle.

WORKING DEPTH

Version for spindles with max diameter 30 / 35 mm

1. Loosen the fixing devices (F) of the guard.
   To adjust it, slide it in the slot.
2. Once adjusted, it must be blocked by tightening the devices (F).

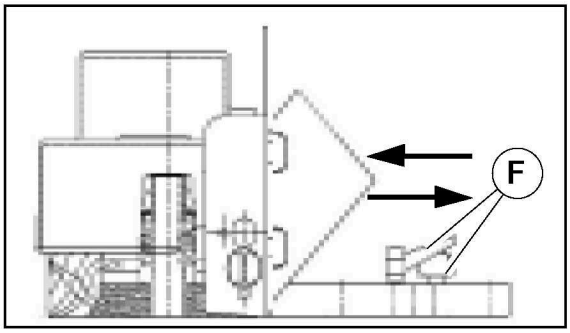

Fig_9A.55-2A_LAB_300P_1-0.jpg

Version for spindles with max diameter 40 / 50 mm

1. Loosen the fixing devices (F) of the guard.
   To adjust it, slide it in the slot.
2. Once adjusted, it must be blocked by tightening the devices (F).

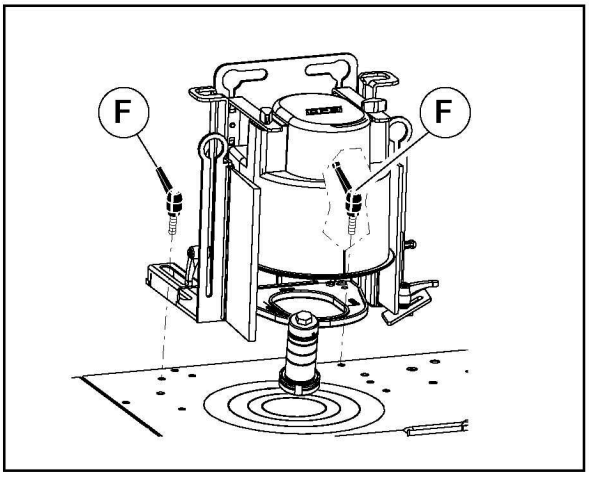

Fig_9A.55-2B_LAB_300P_1-0.jpg

TRACK FEELING STEADY RESTS - HEIGHT ADJUSTMENT

1. loosen the knob (C) and adjust the steady rests (D) to the desired height.
2. Block when adjustment has been completed.

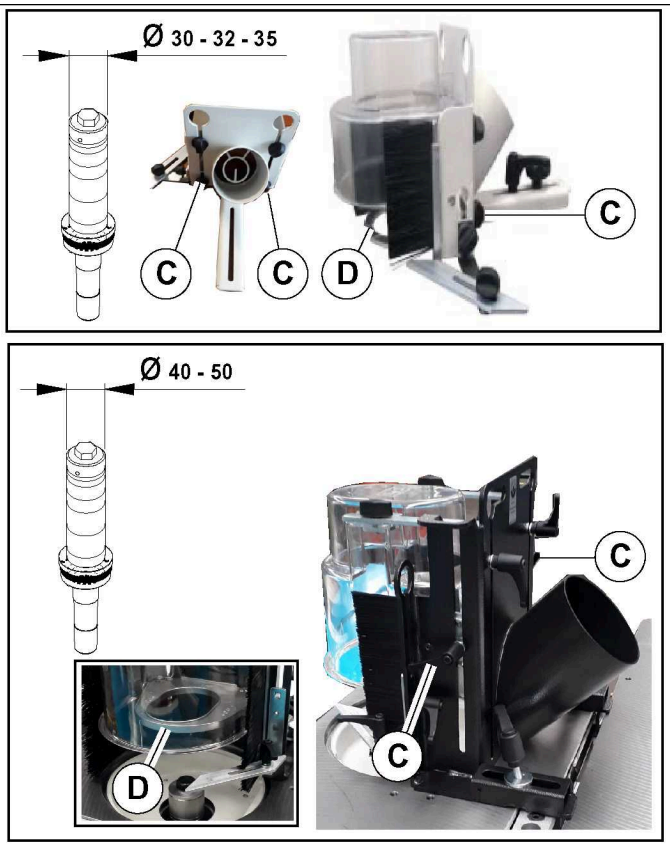

Fig_9A.55-2C_LAB_300P_1-0.jpg

PRESSER

1. loosen the knob (E) and adjust the presser (G) so that it exerts slight pressure on the workpiece.
2. Block when adjustment has been completed.

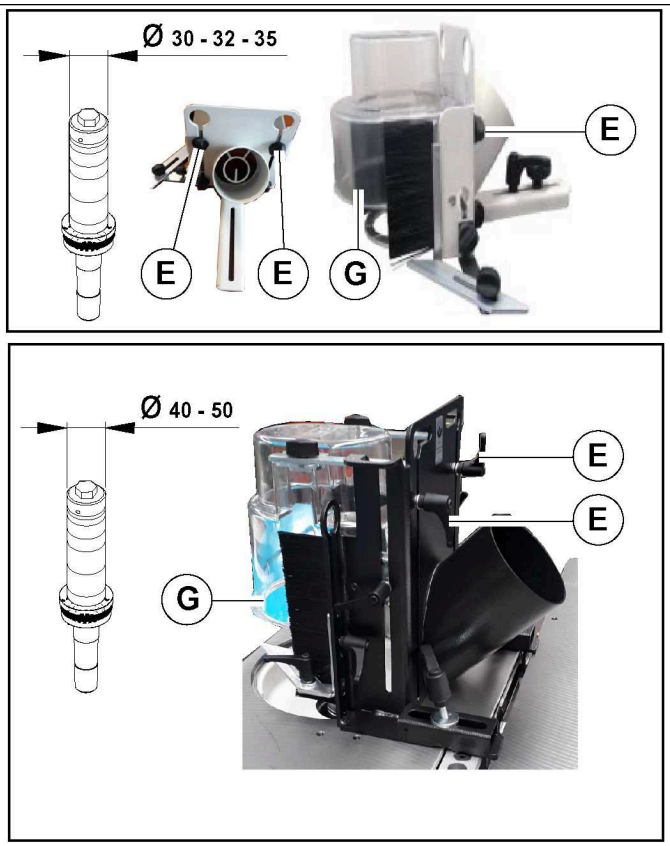

Fig_9A.55-2D_LAB_300P_1-0.jpg

7.9.2 Working examples

This operation is carried out for obtaining profiles along bent lines.

The shaping is carried out by means of the milling cutter (A) and the copying ring (D) fitted on the hood (C).

SPECIALISED PERSONNEL

adjust the hood as indicated in Paragraph" Adjusting".

Before starting work check the various fittings and turn the tool manually to prevent possible contact with fixed parts.

Connect the fitting (4) to the extraction system.

For machining proceed by placing the profile on the guide (E), firmly fixed to the support and push it up to the reference (H) stamped on the steady rest. Thus progressive attachment is obtained until maximum cutting depth.

The reference (H) indicates the point of maximum cutting depth.

The guide may be fixed to the support both on the right side and on the left side of the operator according to the spindle rotation direction.

NOTE

to obtain regular removal the whole machining process must be carried out in correspondence to the reference (H).

As far as possible, the template (P) must be made of non-deformable materials (e.g. multilayer) and equipped with clamps (S).

Machine with reversal of rotation OPT

- Mount the bracket (G) as indicated in par. " Guard for milling at the spindle ".
- Move guide (E) to opposite side (B) after loosening knob (K).

DANGER

set the clenched fists flat on the piece and push it forward by resting it against the guide (E) or against the straight part of the steady rest.

In case of milling against the wood grain or in tranverse direction to the wood grain (dangerous situation), you have to reduce the feed motion to avoid the wood fiber rupture.

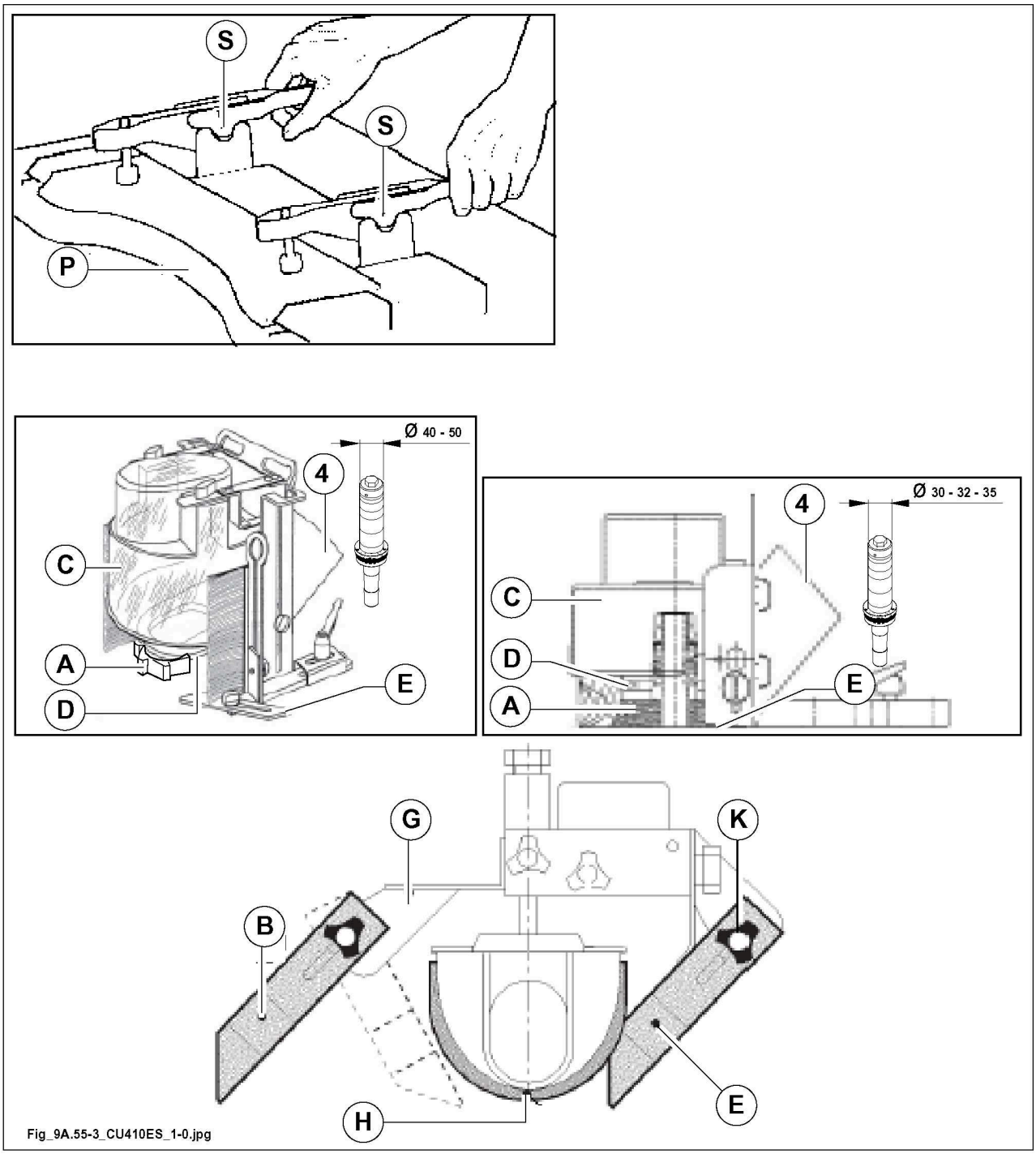

7.9.3 Maintenance

1. Replace the worn or damaged parts.
2. Keep the guard always clean and check its good conditions.

8 Wood pusher

8.1 Wood pusher 166

8.1 Wood pusher

DANGER

When for the execution of a peculiar working, the operator is obliged to put his hands near the tools, for safety reasons a proper pusher shall be used to move the workpiece forwards, to push it against the fence or to remove it after the cutting.

Use the pusher (H) supplied, or:
handle (A) is supplied for this purpose and can be applied to pushers (D) of different size by means of screws (B and C).

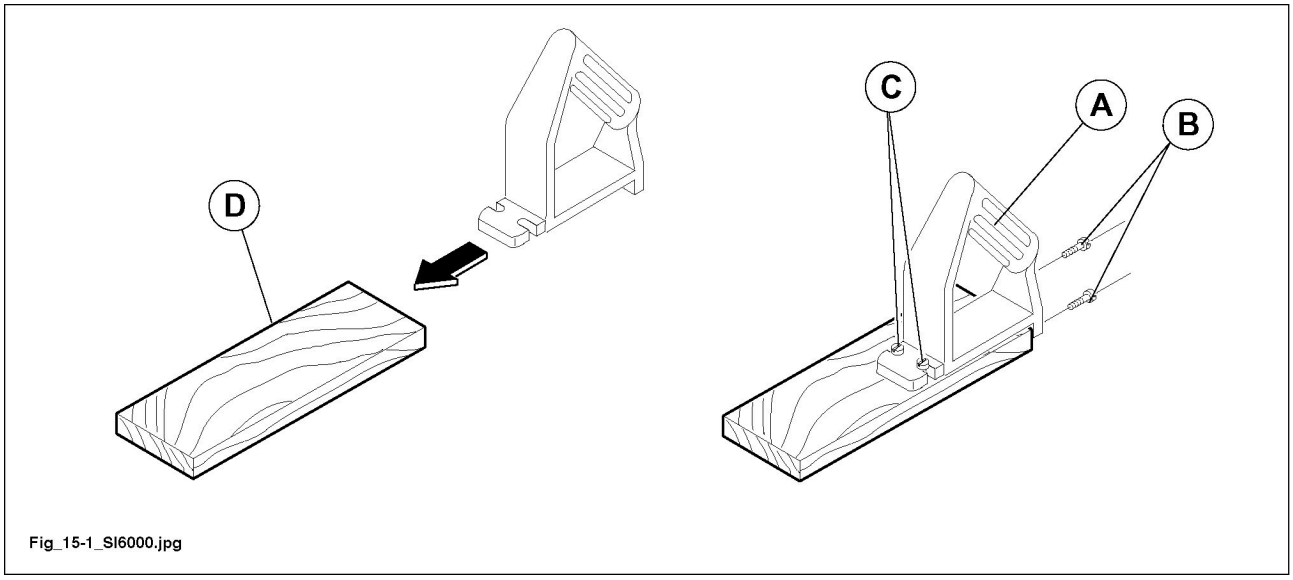

Fig_15-1_SI6000.jpg

Using a powerful dust aspirator unit clean:

- the pusher (H).
- The handle (A).

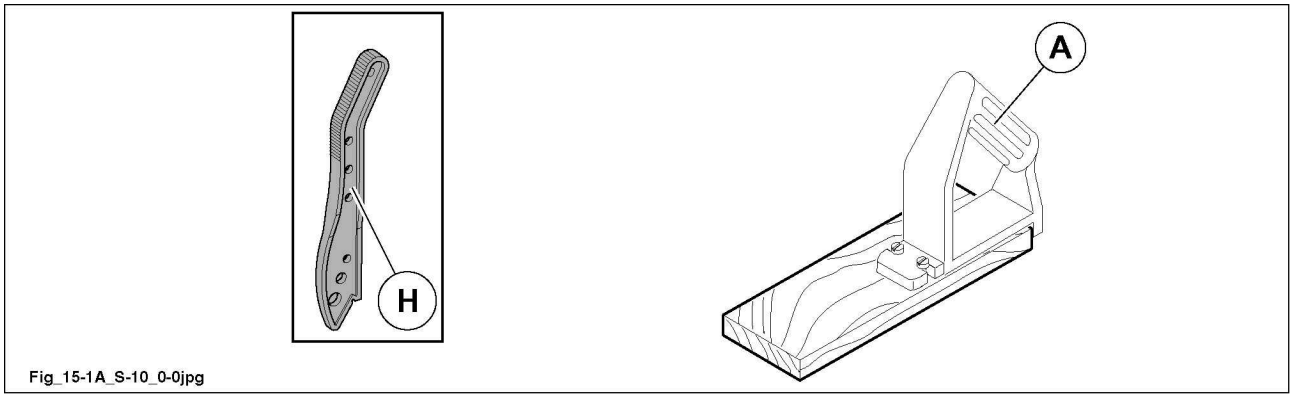

Fig_15-1A_S-10_0-0jpg

NOTE

in case of loss or breakage of the devices contact the manufacturer's SERVICE (Par. "Technical support").

9 Maintenance

9.1 Machine Cleaning 168
9.2 PROGRAMMED MAINTENANCE 171
9.3 Lubrication 174
9.4 Safety devices check 176
9.4.1 Spare parts that affect the operator's health and safety 176
9.5 Replacing the belts 178
9.5.1 Spindle moulder 178
9.6 Belt stretching 180
9.6.1 Spindle moulder 180
9.7 Making the parts which get worn 182
9.7.1 Replacing the chip breaker 182
9.8 Problems - Causes - Solutions 183
9.9 Unscheduled maintenance 187

9.1 Machine Cleaning

DANGER

All cleaning operations are to be carried out by the machine operator or by skilled technician.

DANGER

in the switches with electronic brake, even with the motor stopped, the motor is not galvanically disconnected from the mains. The switch supplies the motor with voltage even after it is switched off.

DANGER

before performing any operation, cut off the electrical supply and disconnect the power supply cable (socket T) from the plug (S).

DANGER

to handle the knives and the cutterblock you shall wear safety gloves.

PROHIBITED

DO NOT USE COMPRESSED AIR; by blowing with a strong air jet chips,dust and dirt of any type may enter into the moving members, so the machine is no more efficient.

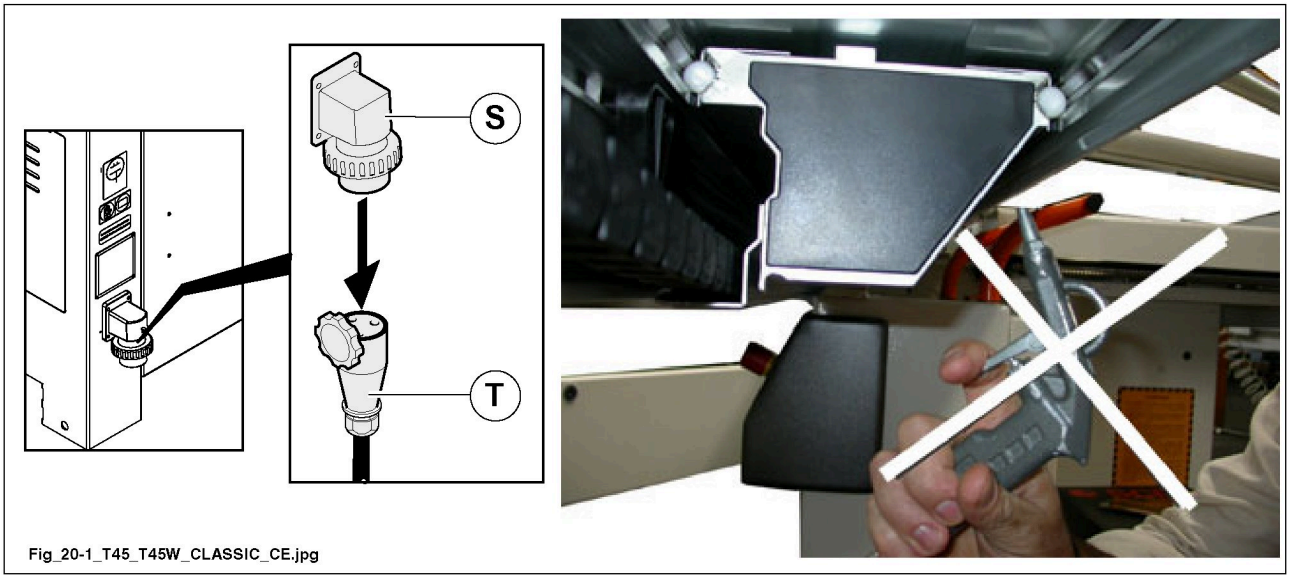

Fig_20-1_T45_T45W_CLASSIC_CE.jpg

The general cleaning of the machine maintains its performance unchanged over time and represents an important safety factor.

NOTE

the frequency of cleaning operations is determined by the environment in which the machine is installed and by the type of material processed.



Fig_20-1A_SI6000.jpg

Rules for the correct cleaning of the machine

DANGER

ensure that the fixing devices of the safety protections are kept clean and perfectly efficient in order to guarantee their correct assembly. Ensure that the fixing holes are clean, especially the blind threaded holes on the horizontal surfaces, that are more prone to fill with shavings and dust.

Using a powerful dust aspirator unit clean:

- inside part of the machine by removing chips or dust.
- The tables and all the cavities where dust or shaving residues are noted.
- Suction hoods (T) by checking that the are no occlusions.
- With the carriage in position 1 (at infeed), then in position 2 (at outfeed), clean the lower guides and, in particular, the points indicated by the arrows (H), to a depth of 15 cm.
- Squaring frame guides (A).
- Carriage and rail sliding guides (S) and (B).
- The sliding groove (C).
- Sliding cylinder (F) of the spindle.
- Sliding rods (G) of presser unit.
- The lifting screw (V) for the spindle.
- Screw for tilting (W) the spindle OPT
- Sliding rods (D) of rest bar OPT
- Lifting chain (E) and pinions (P).

Then by using a cloth or a brush drunken with a proper and not dangerous product,
clean all moving parts specially the ones exposed to the resin and dust.

DANGER

do not oil, do not grease:

- **carriage and rail sliding guides (S) and (B).**

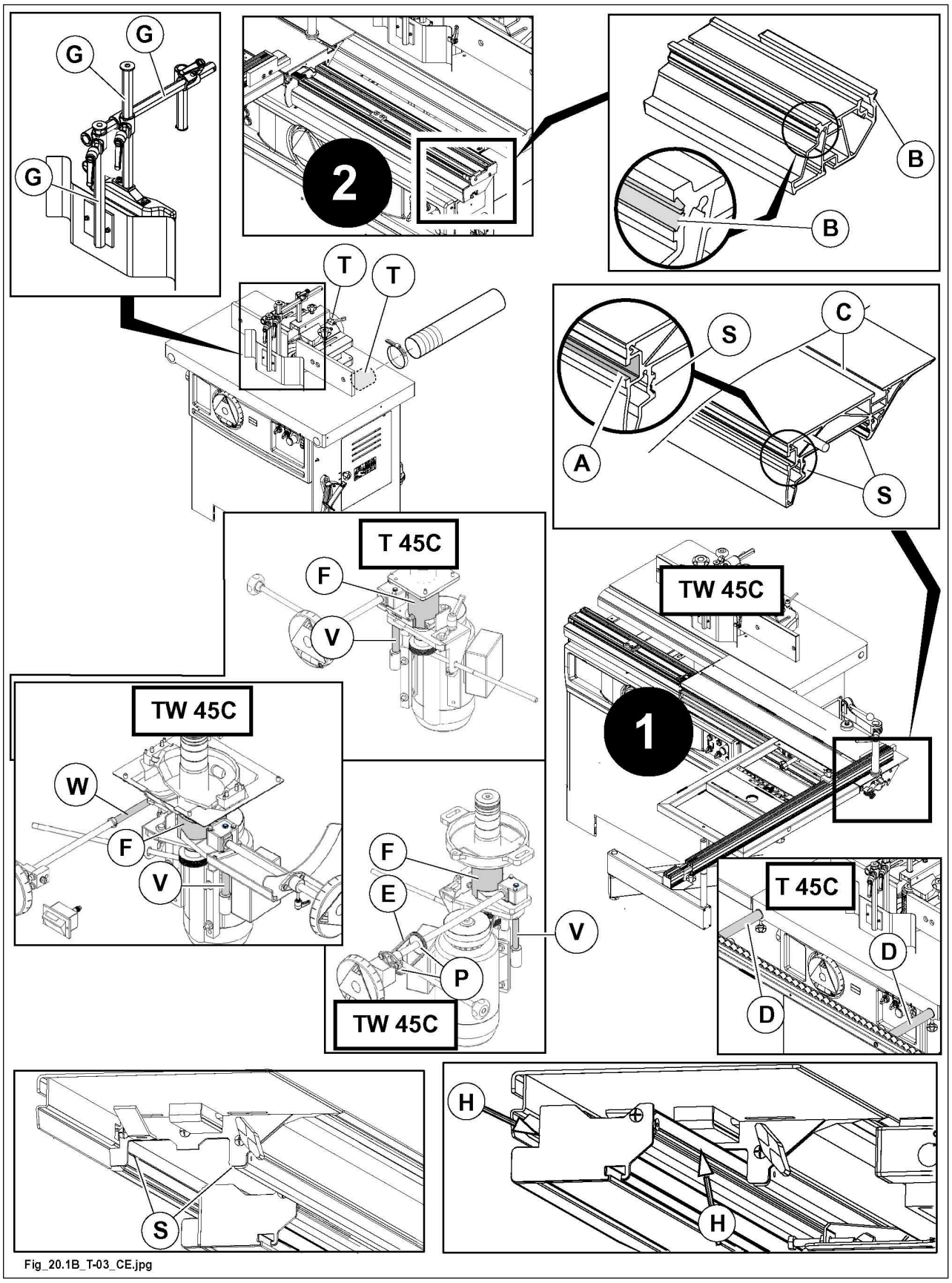

Fig_20.1B_T-03_CE.jpg

9.2 PROGRAMMED MAINTENANCE

Regular maintenance is essential for achieving the best performance and safe operation.

DESCRIPTION	INSPECTION	FREQUENCY	ACTION
General machine cleaning	Visual inspection	Daily	• By using an aspirator remove dust or shavings (Par. " Machine Cleaning").
The tables and all the cavities where dust or shaving residues are noted	Visual inspection	Daily	• By using an aspirator remove dust or shavings (Par. " Machine Cleaning").
Carriage sliding guides (S)	Visual inspection	Weekly	• By using an aspirator remove dust or shavings (Par. " Machine Cleaning"). • Clean with a cloth or brush soaked in a suitable product which is not dangerous. • **Do not oil or grease.**
Extractor hoods cleaning (T)	Visual inspection	Weekly	• Disconnect the flexible tubes from suction hoods, check that there are no occlusions and clean by sucking.
The spindle sliding cylinder (F)	Visual inspection	Daily	• By using an aspirator remove dust or shavings (Par. " Machine Cleaning").
Squaring frame guides (A)	Visual inspection	Daily	• By using an aspirator remove dust or shavings (Par. " Machine Cleaning"). • Clean with a cloth or brush soaked in a suitable product which is not dangerous.
The sliding guides (B) of the rail	Visual inspection	Weekly	• By using an aspirator remove dust or shavings (Par. " Machine Cleaning"). • Clean with a cloth or brush soaked in a suitable product which is not dangerous. • **Do not oil or grease.**
Presser unit sliding rods (G)	Visual inspection	Daily	• By using an aspirator remove dust or shavings (Par. " Machine Cleaning"). • Clean with a cloth or brush soaked in a suitable product which is not dangerous.

DESCRIPTION	INSPECTION	FREQUENCY	ACTION
Sliding rods (D) of rest bar OPT	Visual inspection	Weekly	• By using an aspirator remove dust or shavings (Par. " Machine Cleaning"). • Clean with a cloth or brush soaked in a suitable product which is not dangerous.
Lifting chain (E) and pinions (P).	Visual inspection	Weekly	• By using an aspirator remove dust or shavings (Par. " Machine Cleaning"). • Clean with a cloth or brush soaked in a suitable product which is not dangerous.
Sliding groove (C)	Visual inspection	Daily	• By using an aspirator remove dust or shavings (Par. " Machine Cleaning").
The lifting screw (V) of the spindle	Visual inspection	Weekly	• Lubricate with grease (Par. 20.3)." Lubrication").
The endless screw (W) for tilting the spindle unit OPT	Visual inspection	Weekly	• Lubricate with grease (Par. 20.3)." Lubrication").
Driving belts	Check tensioning and wear	Weekly	• Tension correctly (see Par. "Belt stretching") • or replace if necessary (see Par. " Replacing the belts")
Safety and emergency devices	Visual check and check operation	Every 2 weeks	• Perform stop tests (Par." Safety devices check").
Safety circuit	20 years		• Contact the manufacturer

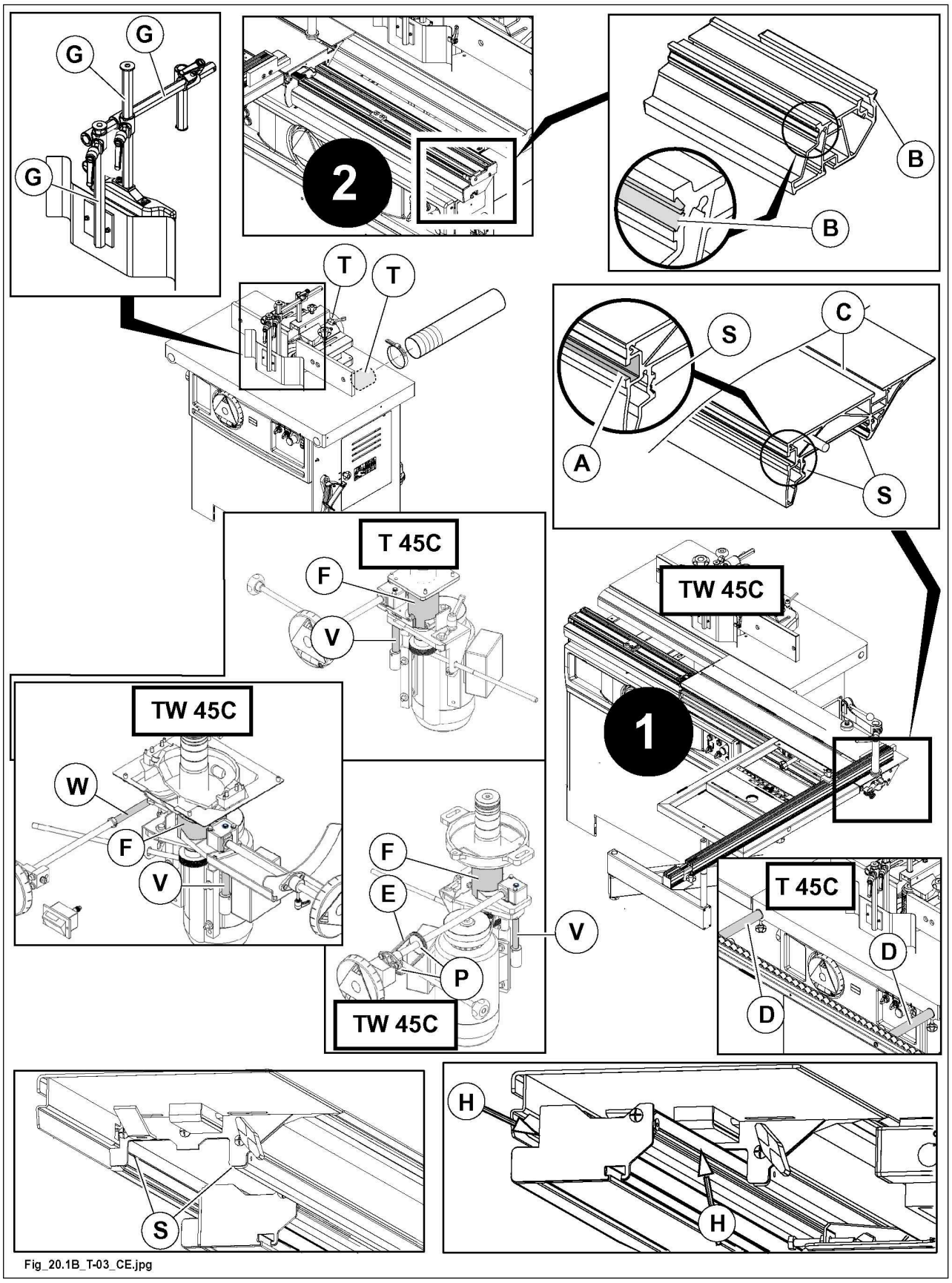

Fig_20.1B_T-03_CE.jpg

9.3 Lubrication

Correct lubrication will extend the machine life and ensures better performance.
Each week, lubricated with type of grease:

Manufacturer	Acronym
AGIP	GR MU EP1
ARAL	ARALUB HL1
BP	GREASE LTX1
SHELL	SUPER GREASE EP1
MOBIL	MOBILPLEX 46
KLÜBER	CENTOPLEX 1
ESSO	BEACON EP0

1. The lifting screw (V) for the spindle.
2. The screw for the tilting (W) of the spindle (OPT).

DANGER

do not oil, do not grease:

- **carriage and rail sliding guides (S) and (B).**

NOTE
Protect all belts and pulleys to avoid contamination with oil.

NOTE
the top bearings of the spindle are special.

NOTE
- all bearings are protected and lubricated for life, hence they do not require any maintenance.
- for replacement, request these bearings directly from our Spare Parts Office.
- bearings of other brands, with corresponding abbreviations, are NOT suitable for use.

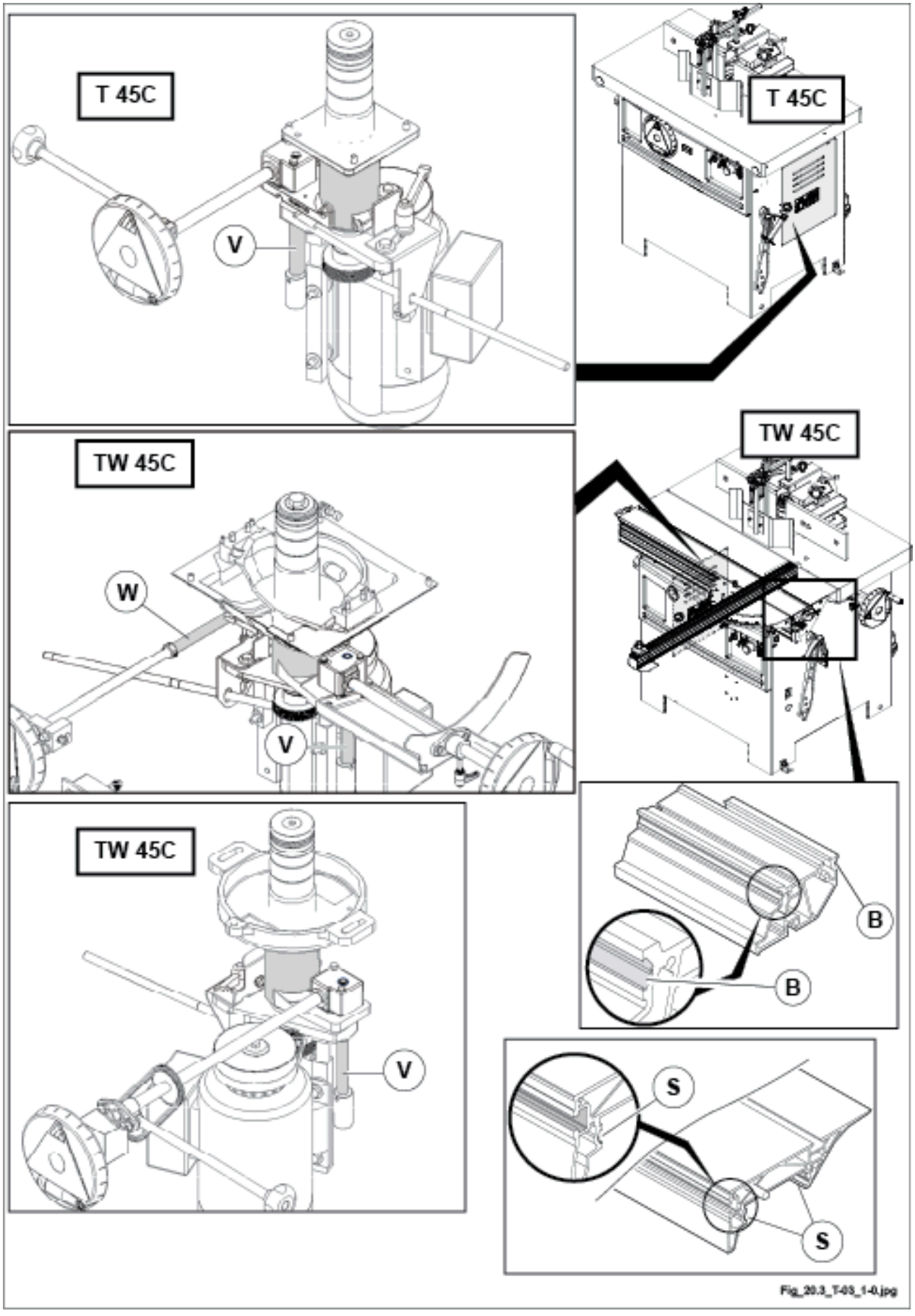
T 45C
V
T 45C
TW 45C
W
V
TW 45C
B
B
TW 45C
V
S
S
Fig_20.3_T-03_1-0.jpg

9.4 Safety devices check

The machine is equipped with safety devices described in Chapter "Safety and emergency stop devices" which ensure the safe machine operation.

Every 2 weeks check the controls for emergency stops with a test.

- With the machine under normal operating conditions press the emergency buttons arranged on the machine one at a time.
  The motor shall stop.

Every 2 weeks check that the microswitches are efficient.

- With the machine under normal operating conditions, by opening the door of the motor housing the spindle motor shall stop.

NOTE

- the belt slackening may cause an increase of the braking time, therefore make sure that the belts are stretched and in good conditions (see Par. "Belt stretching") (maximum stop time 10 sec).

At the beginning of each working shift make sure that the guards on all sides of the machine are efficient and ensure a valid protection.

Periodically check the plates in particular the ones with yellow ground are in good state.

DANGER

The responsible technician is to be informed about eventual troubles during the test; in that case he shall shut off the machine and apply to SCM. Technical Service of dealer.

Every 20 years, it is mandatory to review the integrity of the safety circuit by contacting the manufacturer.

9.4.1 Spare parts that affect the operator's health and safety

The previous section "Checking safety devices" “ ” indicates the operations that the user must carry out and their frequency. These operations are designed to identify any failures in the machine’s safety systems.

NOTE

If a failure is found the user must contact the technical support centre authorised by SCM.

PROHIBITED

never attempt any work on the devices unless otherwise indicated in this manual

The SCM's technical support centre will identify which component of the safety system that must be replaced and will replace it (or provide instructions on how to proceed).

NOTE

the user (or one of his specialised technicians) is authorised to carry out only the interventions described in this instructions manual.

DANGER

for every maintenance intervention USE ONLY ORIGINAL SPARE PARTS provided by SCM (manufacturer).

The manufacturer will not be responsible for any damages due to the use of non-original spare parts.

NOTE

the entire electrical/electronic system of the machine is functional to the machine's safety.

The user is therefore NOT AUTHORISED to perform any repair/replacement intervention of electrical and electronic components, apart from any indicated in this manual.

DANGER

The user must comply with the replacement intervals of the various safety devices, by contacting the SCM technical support service to identify the correct spare part and installation (unless indicated otherwise in this manual).

SPARE PARTS THAT CAN BE INSTALLED BY THE USER

NOTE

in the spare parts catalogue the letter "C" indicates the codes of spare parts which affect operator health and safety.

These spare parts can be installed by expert personnel instructed by the user.

DANGER

for all other spare parts contact the SERVICE of the Manufacturer's Dealer/Agent or contact the Manufacturer's SERVICE directly.

9.5 Replacing the belts

DANGER

check the belt tension after the first 10 hours of machine operation. Do not overstretch the belts not to overload the bearings. Excessive tension causes the belts to stretch, overheating and rapid destruction of the belts.

After the adjustments have been made, check the stopping time again.

9.5.1 Spindle moulder

DANGER

all adjusting operations are to be carried out with standstill spindle.

Always wear gauntlets when handling the tools.

Before performing any operation, cut off the electrical supply and disconnect the power supply cable (socket T) from the plug (S).

Proceed as indicated below:

- Open the door (V) (a limit switch ensures the safe machine condition).
- Loosen the handle (A).
- Push the motor.
  The belt (C) now is slack and can be replaced.
- Insert the belt into the pulley grooves according to the desired speed, referring to the plate (B).
- Operate the motor moving the pulleys apart and tighten the handle (A).

SPECIALISED PERSONNEL

an excessive belt tightening will cause both functioning failures and belts wear beforehand.

- Close the door (V).

DANGER

Before starting the machine make sure that the rotation speed you have selected is proper for the working, the wood type and for the tool used on the machine.

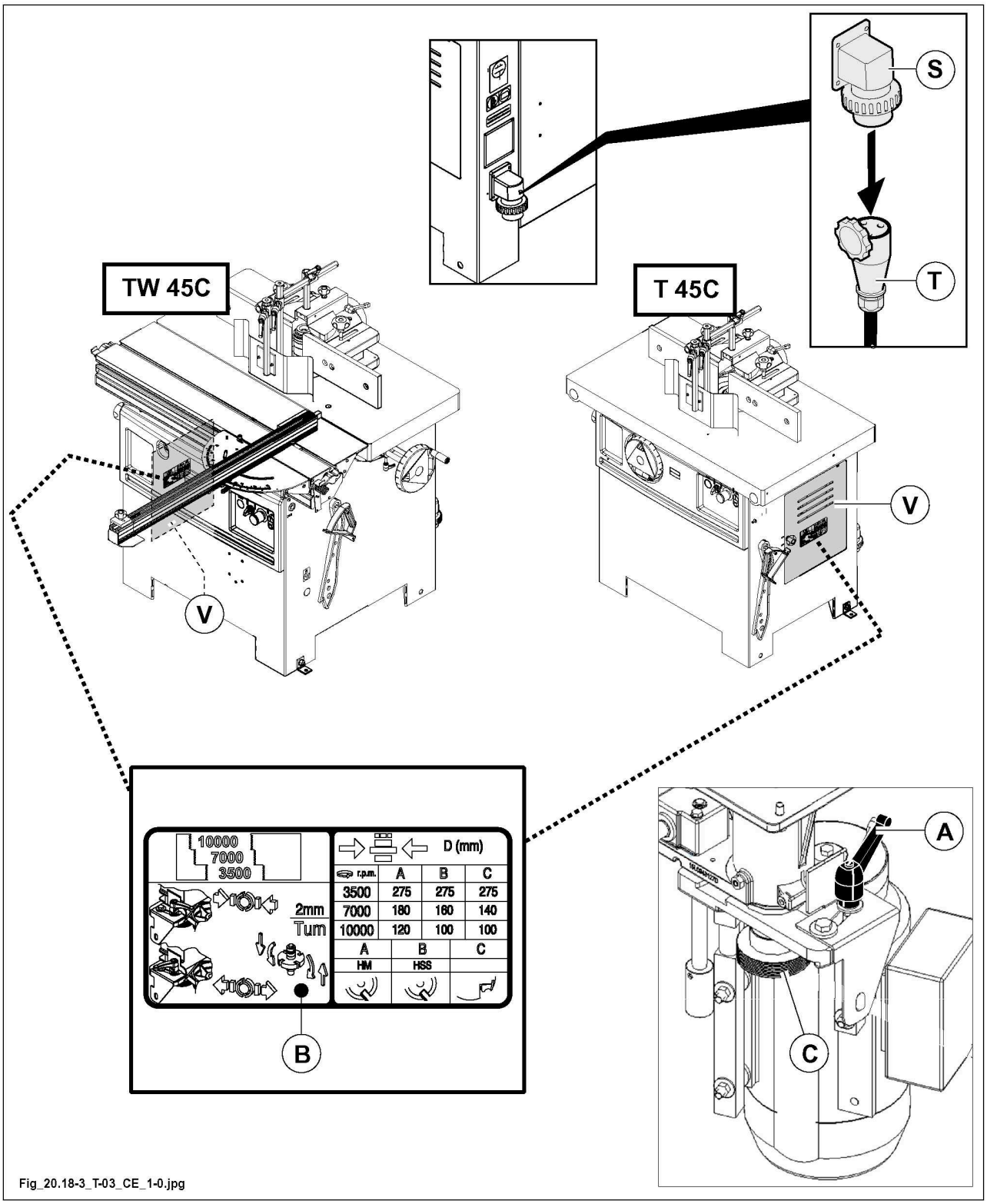

Fig_20.18-3_T-03_CE_1-0.jpg

9.6 Belt stretching

DANGER

check the belt tension after the first 10 hours of machine operation. Do not overstretch the belts not to overload the bearings. Excessive tension causes the belts to stretch, overheating and rapid destruction of the belts.

After the adjustments have been made, check the stopping time again.

9.6.1 Spindle moulder

DANGER

all adjusting operations are to be carried out with standstill spindle.

Always wear gauntlets when handling the tools.

Before performing any operation, cut off the electrical supply and disconnect the power supply cable (socket T) from the plug (S).

Proceed as indicated below:

- Open the door (V) (a limit switch ensures the safe machine condition).
- Unloose the locking handle (A) and act on the motor to stretch the belt (C).
- Tighten handle (A) at completion of adjustment.
- Close the door (V).

Periodically every week check the belt tension.

SPECIALISED PERSONNEL

an excessive belt tightening will cause both functioning failures and belts wear beforehand. By exerting a force “**P**” in the middle of a belt, the latter must have a yielding “**f**” as shown in the table.

Force P		Yielding f (mm)
N	Kp	
24 - 26	2.4 - 2.6	1.5 - 2.0

DANGER

Before starting the machine make sure that the rotation speed you have selected is proper for the working, the wood type and for the tool used on the machine.

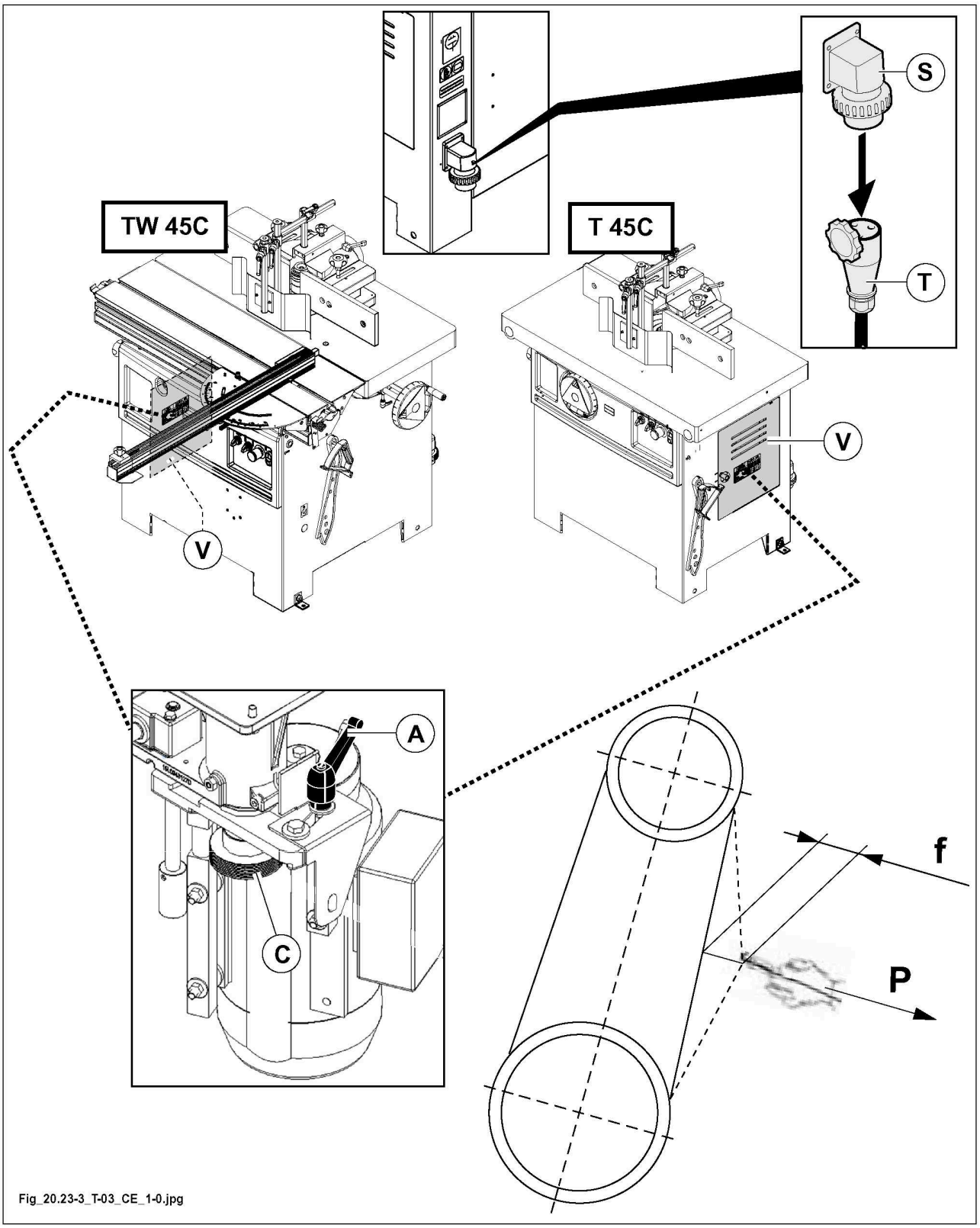
TW 45C
T 45C
S
T
V
V
A
C
f
P
Fig_20.23-3_T-03_CE_1-0.jpg

9.7 Making the parts which get worn

9.7.1 Replacing the chip breaker

If it is necessary to replace the wooden part (M), contact:

- your SCM dealer;
- or to our Spare Parts Department SCM,
  or reconstruct it using beech wood, by using the measurements shown in the figure.

To replace the worn splinter guard

- adjust the screws (X).
- Reassemble the new splinter guard and tighten the screws (X).

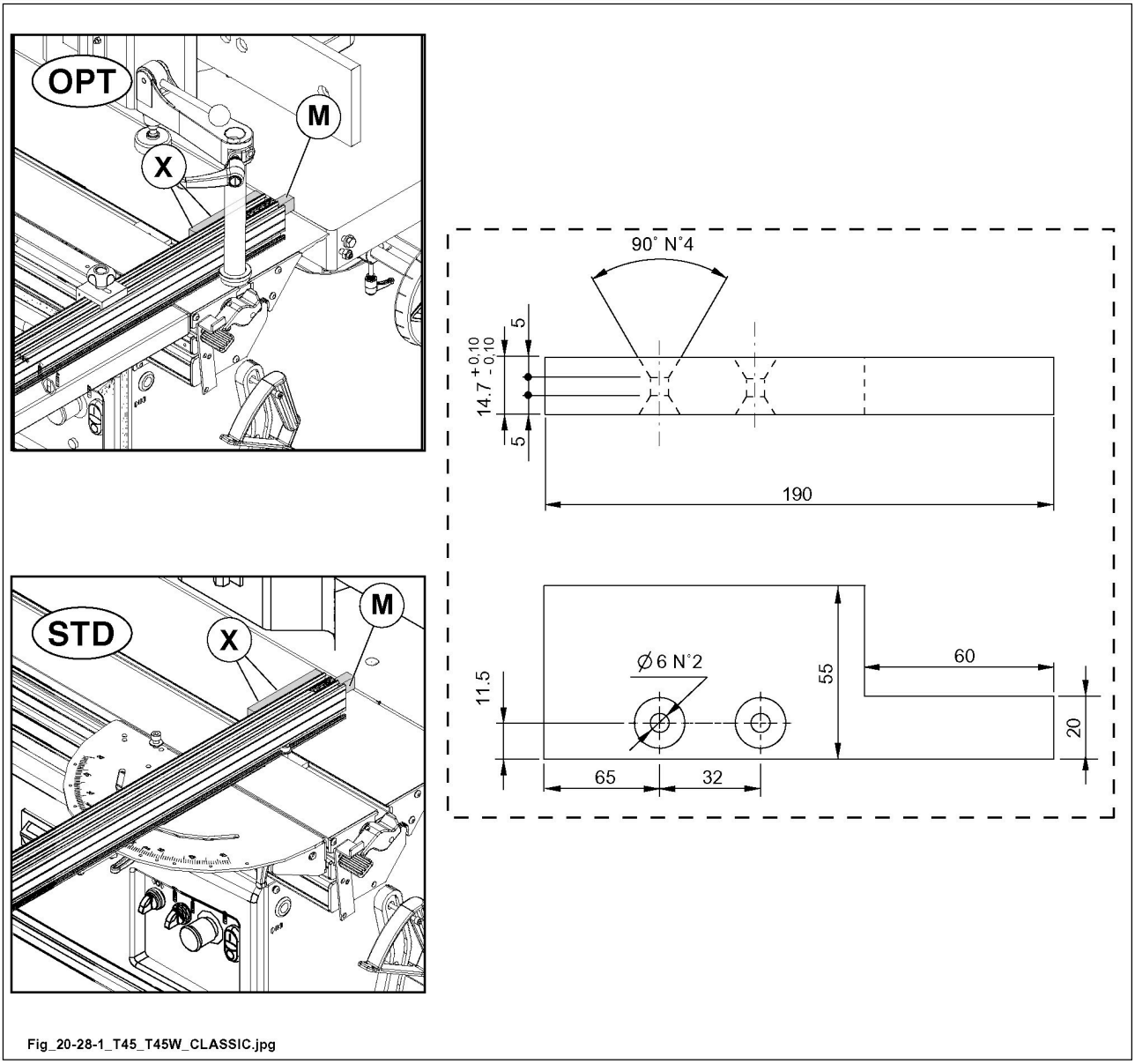

Fig_20-28-1_T45_T45W_CLASSIC.jpg

9.8 Problems - Causes - Solutions

This section indicates some solutions for problems that may arise while using the machine.
It is important to intervene only after having read everything related to the problem in detail, whether it is found in the following pages or in the rest of the manual.
In case of troubles not described here, contact the Technical Service SCM.

PROBLEM	CAUSES	REMEDIES
The machine does not start when it is switched on:	No electrical energy on one or more phases of the line.	Check that there is voltage in the three phases in the laboratory.
	The fuses of the auxiliary circuit are interrupted or the fuse block cover is open.	Close the fuse block cover (located inside electric cabinet). If the machine does not start: 1- Open the fuse block cover. 2- Check the integrity of fuse, if necessary, replace them.
	Emergency on.	Switch off the emergency button by turning it.
	Overload switch (A) triggered because: • excessive current absorption caused by improper machine use (work too heavy in relation to motor power) • cable too small for motor power (see electrical connection specifications chap."Electrical installation") • voltage drop caused by the excessive length of the power cable • short circuit in the electric system.	Resolve the problem, wait for the overload switch to cool down and start the machine again. Reset overload located inside electric cabinet (see Par. " Access to the electric housing").
	Safety microswitch on.	Check that the protection door to access the spindle moulder is closed.
	Selector for rotation reversal not in right position.	Turn the selector to the symbol or .
The machine stops during machining.	No electrical energy on one or more phases of the line.	Check that there is voltage in the three phases in the laboratory.
	The fuses of the auxiliary circuit are interrupted or the fuse block cover is open.	Close the fuse block cover (located inside electric cabinet). If the machine does not start: 1- Open the fuse block cover. 2- Check the integrity of fuse, if necessary, replace them.
	Operation too demanding in relation to the motor power.	Wait for the cooling of the thermal cut out protection. Reactivate it after a few minutes.
	The motor belt is loose or ruined.	Stretch the belts (see Par. " Belt stretching") or change them as described in paragraph" Replacing the belts".

PROBLEM	CAUSES	REMEDIES
The motor turns but the tool stops when it comes into contact with the workpiece.	The motor belt is loose or ruined.	Stretch the belts (see Par. " Belt stretching") or change them as described in paragraph" Replacing the belts".
The spindle does not move vertically and does not tilt.	The screw is jammed with dust and resin.	Clean thoroughly (see Par. " Machine Cleaning").
The telescopic rule does not position correctly at 90°	The end-stops in the frame are not adjusted.	Remove the two T caps and use the adjustment screws V to position the telescopic rule correctly at 90° (see figure).

Switch with electronic brake

PROBLEM	CAUSES	REMEDIES
When the machine is switched on (from the main switch) the electronic brake is BLOCKED (the “yellow” warning light (D1) is steady on).	The cable of the electronic brake module and/or motor is not connected correctly.	Check the connections.
	Motor failure.	Contact our technical service (see telephone number in "Technical support").
	Electronic brake module failure.	Contact our technical service (see telephone number in "Technical support").
The electronic brake is BLOCKED (the “yellow” warning light (D1) is steady on).	The tool fitted is not amongst those that can be used (see Par. "Technical data")	Replace the tool
	The saw motor belt is loose or ruined.	Tension the belt as described in paragraph " Belt stretching".
	The cable of the electronic brake module and/or motor is not connected correctly.	Check the connections.
	Failure or loss of calibration of the electronic brake module.	Contact our technical service (see telephone number in "Technical support").

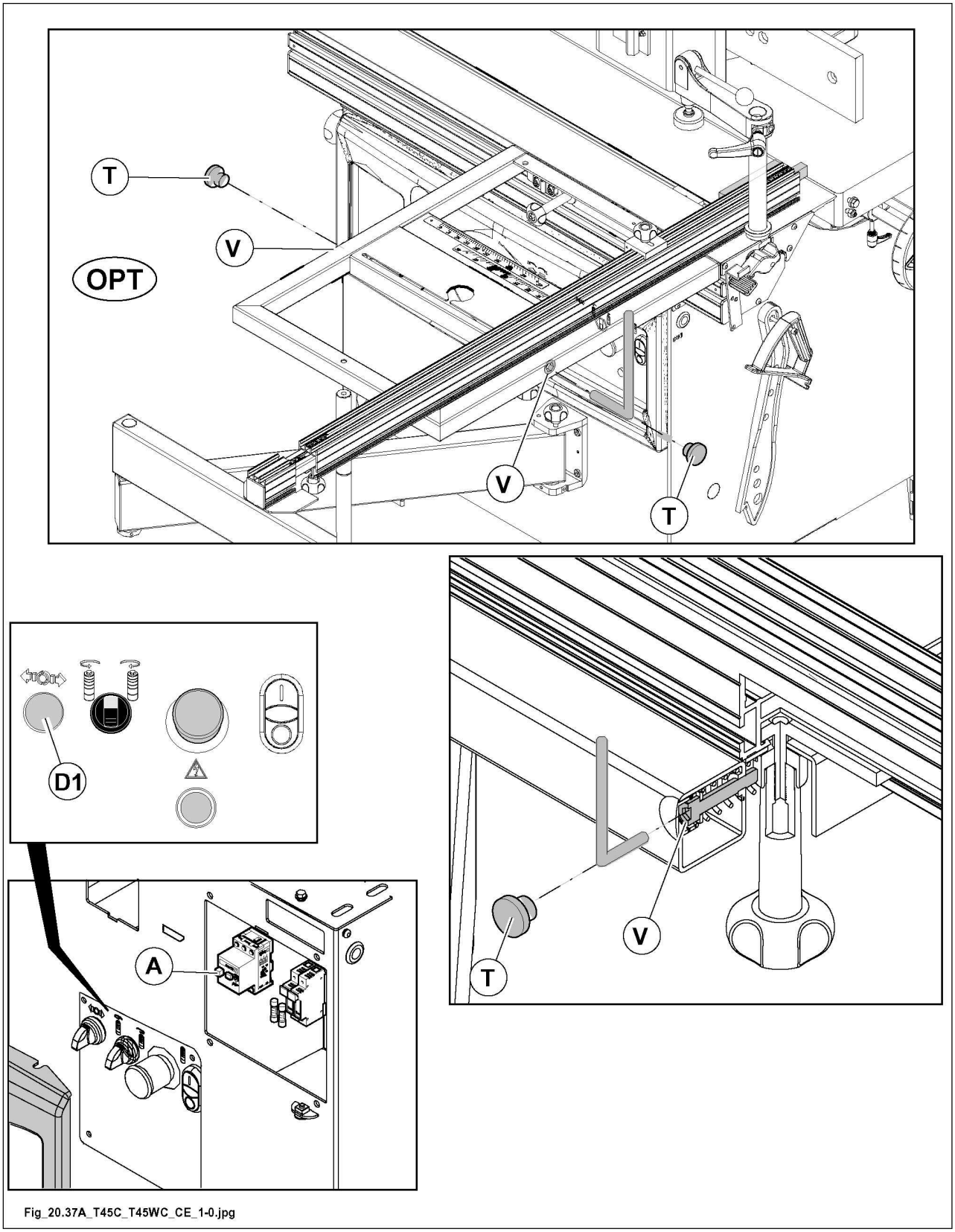

Fig_20.37A_T45C_T45WC_CE_1-0.jpg

9.9 Unscheduled maintenance

All operations not expressly listed in this manual, such as:

1. operations due to faults in the components or electric motors
2. interventions due to faults in the mechanical components

are considered as unscheduled maintenance operations.

Such operations require specific skills and must be performed by qualified personnel authorised by the machine manufacturer.

DANGER

never attempt to make repairs or makeshift replacements as this could cause serious dangers for exposed persons and for the machine.

SCM Industria SpA
Via Valdicella, 7 - 47892 Gualdicciolo (RSM) - San Marino
www.scmgroup.com

T 45C - TW 45C
Instruction manual Ed. 10-2025 / Rev. 0.0 EC
© 2026 SCM Industria SpA

00L0369131D