Surface and thickness planer

minimax fs 52es TERSA

Maximum equipment for the professional with TERSA knife shaft.

Article number
5503501

Brand
Holzkraft



Availability
No stock available
Information:
Next availability
Expected on calendar week 48/2026

Catalog directory
Woodworking machinery » Planers » Surface and thickness planers » Surface and thickness planer minimax fs 52es

Purchase
Minimum 1 pc(s).

Delivery content

- Dressing joining stop with round bar guide
- 4 feed rates
- Tersa cutterblock

Shipping informations

Packaging Metrics		Weights		Delivery		Other	
Length	n/a	Gross	695 kg	Delivery	Carrier	DualUse	✖
Width	n/a	Net	695 kg	Content	1 pc(s).	SCIP	n/a
Height	n/a					SVHC	No

Root data

Country of origin	EAN	Customs Tariff Number	Quantity unit
Italy	4036351221357	84659200	pc(s).

MADE IN ITALY

Description

- Ideal for demanding craftsmen and carpenters
- The particularly long dressing tables made from a single piece enable easy dressing of workpieces
- Work tables are made of gray cast iron, making them robust and permanently flat
- Dressing tables open simultaneously to the rear with tension spring support for quick and easy retooling
- Thanks to the fixed extraction hood, the extraction hose does not need to be repositioned during retooling, saving valuable working time
- Diagonally toothed steel infeed roller ensures constant and even wood infeed
- Rubber extraction roller in the thickness outlet ensures even wood extraction
- Material feed with four speeds
- Planer thicknessing table adjustment via handwheel with integrated display for planing height
- DIGITAL version: with electric thicknessing table height adjustment and digital display
- On and off switch in operator position
- Powerful industrial motor
- The high machine weight ensures maximum precision and smooth running.
- Preparation for slot drilling device
- Equipped with fold-down planer shaft guard for user-friendly operation
- Made in Italy quality

Manufacturer
SCM Group S.p.A Div. MINIMAX
Via Casale 450, 47826 Villa Verucchio (RN), Italy
minimax@scmgroup.com

Media informations





Adjustment of the thickness table

- Via handwheel with integrated display

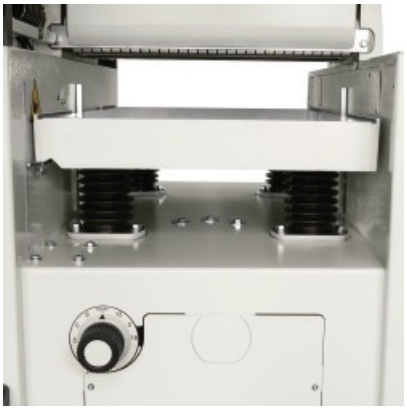

Thicknessing table

- Mounted on four large-dimension spindles that ensure maximum stability under all working conditions
- Thanks to the special lifting device, the table position is perfectly maintained even without being locked in place

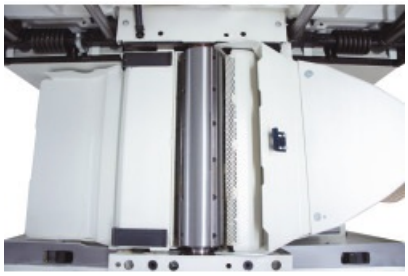

Planing mill

- Massive anti-kickback devices prevent the kickback of workpieces

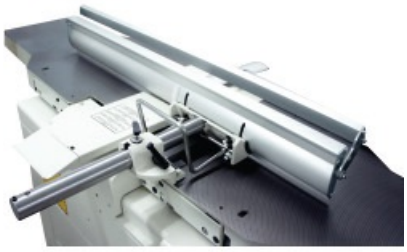

Anodized aluminum dressing fence

- Large dimensions (1200 x 150 mm)
- Easily movable
- Tiltable from 90° to 45° above scale



Auxiliary stop

- Standard
- For safe planing of even narrow workpieces

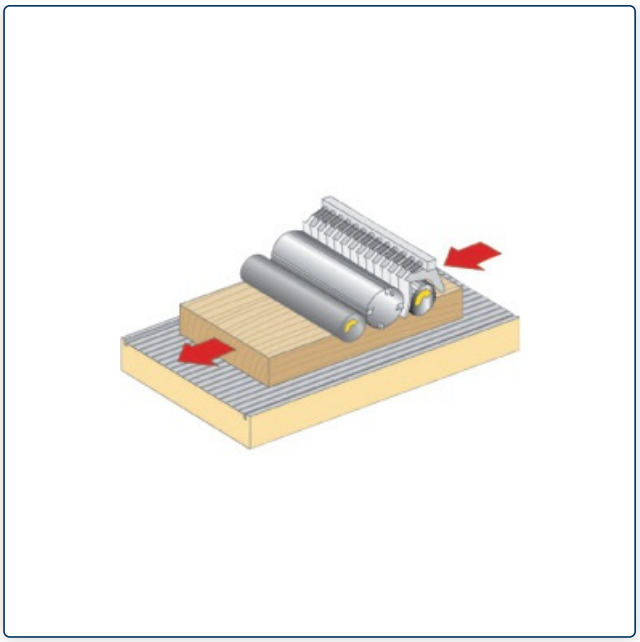

The material feed

- Helical toothed steel infeed rollers
- For a constant and even wood infeed without impressions
- Multiple teeth grip simultaneously for powerful feed
- Wear-free in contrast to rubber infeed rollers

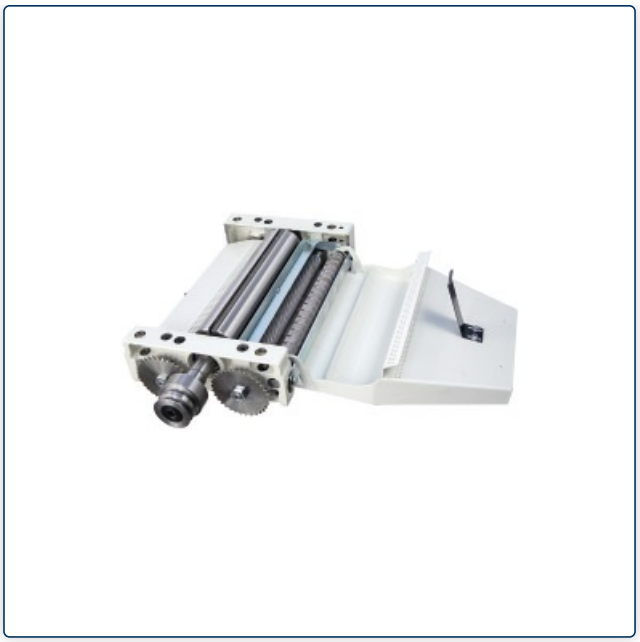

Chip removal already from 0.2 mm

- With min. workpiece thickness of 3 mm
- Thanks to helical toothed infeed roller
- Ideal for economical planing of precious woods

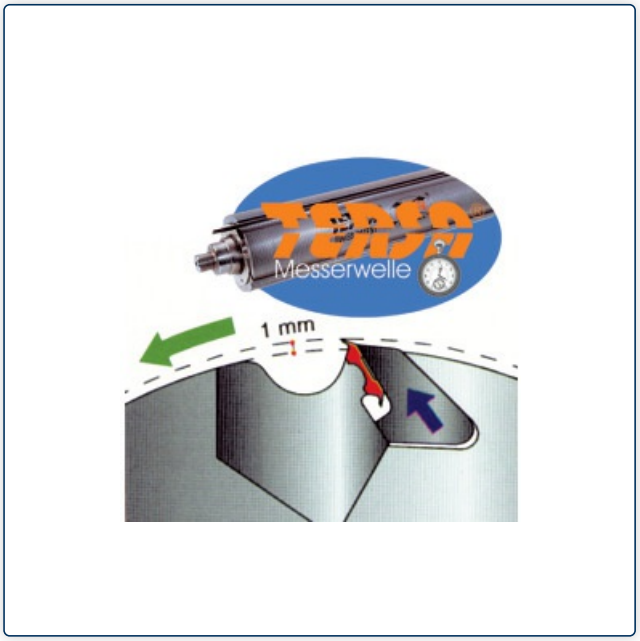

Tersa planer cutterhead

- No adjustment and more screws
- Planer blade change in seconds
- Self-locking
- Especially quiet running

Technical data

Dimensions and weights			
Length (product) approx.	2250 mm	Width/depth (product) approx.	1370 mm
Net weight approx.	695 kg		

Jointing			
Total length of table	2250 mm	Max. cutting depth of joints	5 mm
Planing stop length	1200 mm	Planing stop height	150 mm
Extraction port			
Extraction port diameter thickness	120 mm		
Installation information			
Space requirement length	2250 mm	Space requirement width/depth	1440 mm
Space requirement explanation	The dimensions take into account maximum travel distances or useful lengths.		
Thickness			
Thicknessing table length	520 mm	Thicknessing table width	850 mm
Working height min. thickness	3 mm	Working height max. thickness	240 mm
Working length min. thickness	220 mm	Max. cutting depth thickness	5 mm
Electrical Data			
Drive motor output	7 kW	Supply voltage	400 V
Mains frequency	50 Hz		
Planing knife shaft			
Planing shaft type	TERSA	Planing shaft diameter	120 mm
Number of planing blades	4 St	Planing shaft speed	5000 min^{-1}
Max. planing width	520 mm		
Feed			
Feed speed	5/8/12/18 m/min		

Accessories



Slot mortising equipment
LLBE-F-ELITE-S

Article number 5514330

Availability No stock available
Information:
Next availability
Unknown

Purchase Minimum 1 pc(s).

Price informations



Reversible planer knife
Tersa 520 x 10 x 2.3 mm Chrome (4 pieces)
Quality at reasonable prices

Article number 5270520

Availability In stock
Immediate delivery

Purchase Minimum 1 Set (4 pc(s).)

Price informations



Reversible planer knife
Tersa 520 x 10 x 2.3 mm HSS (4 pieces)
Quality at reasonable prices

Article number 5271520

Availability In stock
Immediate delivery

Purchase Minimum 1 Set (4 pc(s).)

Price informations



Long hole drill set
5-part, clockwise

Article number	Availability	Purchase	Price informations
5333682	In stock Immediate delivery	Minimum 1 pc(s).	



Lifting and moving device

Article number	Availability	Purchase	Price informations
5514108	In stock Immediate delivery	Minimum 1 pc(s).	

Options equipment



Motor power
9.0 kW

Article number	Availability	Purchase	Price informations
5514125	No stock available Information: Next availability Unknown	Minimum 1 pc(s).	

Prices on this data sheet are recommended retail prices, subject to change, in €, plus VAT at the statutory rate, plus packaging, shipping, transport, unloading, assembly and, if applicable, instruction costs. Sales prices of the dealers can deviate. No liability is accepted for printing errors, mistakes or incorrect presentation. Technical and optical changes are reserved. Illustration partly with optional accessories.