Translation of the original operating instructions

This manual must be kept for future reference and must always remain with the machine

C 26G - C 30G

INSTRUCTION MANUAL

CE

COMBINED UNIVERSAL MACHINE FOR WORKING WITH WOOD AND MATERIAL WITH SIMILAR PHYSICAL CHARACTERISTICS



minimax

Rel. 1.0 / 06-2018 **00L0368657L** **EN**

THIS MANUAL IS PROPERTY OF SCM INDUSTRIA S.P.A - ANY TOTAL OR PARTIAL REPRODUCTION IS STRICTLY FORBIDDEN

THIS MANUAL IS PROPERTY OF SCM INDUSTRIA S.P.A - ANY TOTAL OR PARTIAL REPRODUCTION IS STRICTLY FORBIDDEN

MANUFACTURER:	**SCM INDUSTRIA S.p.A.**
ADDRESS:	**Via Valdicella, 7 - 47892 - Gualdicciolo - Rep. San Marino**
DESIGNATION:	**COMBINED UNIVERSAL MACHINE FOR WORKING WITH WOOD AND MATERIAL WITH SIMILAR PHYSICAL CHARACTERISTICS**
BRAND:	**SCM**
TYPE:	**C-04 / C-05**
MODEL:	**C 26G - C 30G**
TYPE OF DOCUMENT:	**INSTRUCTION MANUAL**
DOCUMENT CODE:	**00L0368657L**
EDITION:	**Rel. 1.0 / 06-2018**
CONFORMITY:	CE

THIS MANUAL IS PROPERTY OF SCM INDUSTRIA S.P.A - ANY TOTAL OR PARTIAL REPRODUCTION IS STRICTLY FORBIDDEN

DICHIARAZIONE “CE” DI CONFORMITA’

(AI SENSI DELL'ALLEGATO IIA DELLA DIRETTIVA 2006/42/CE
E DICHIARAZIONE "UE" AI SENSI DI ALTRE DIRETTIVE APPLICABILI)

"EC" DECLARATION OF CONFORMITY

(PURSUANT TO ATTACHMENT IIA OF DIRECTIVE 2006/42/EC
AND "EU" DECLARATION PURSUANT TO OTHER APPLICABLE DIRECTIVES)

IL FABBRICANTE: *THE MANUFACTURER:*	**SCM INDUSTRIA S.P.A** **VIA VALDICELLA 7 - 47892 GUALDICCIOLO (R.S.M.)**

DICHIARA CHE LA
DECLARES THAT

MACCHINA: *MACHINE:*	**COMBINATA UNIVERSALE PER LA LAVORAZIONE DEL LEGNO E DI MATERIE CON CARATTERISTICHE FISICHE SIMILI** **COMBINED UNIVERSAL MACHINE FOR WORKING WOOD AND MATERIAL WITH SIMILARY PHYSICAL CHARACTERISTICS**		
MARCA: *BRAND:*	***SCM***	N° DI SERIE: *SERIAL No.:*	
TIPO: *TYPE:*	***C-04***	ANNO DI COSTRUZIONE: *YEAR OF CONSTRUCTION:*	
MODELLO: *MODEL:*	**C 26G**		

FACSIMILE OF THE COPY OF THE “EC”
DECLARATION PRINTED ON WATERMARKED
PAPER THAT IS DELIVERED TO THE CUSTOMER

E’ CONFORME A TUTTE LE DISPOSIZIONI PERTINENTI DELLE SEGUENTI DIRETTIVE:
COMPLIES WITH ALL THE RELEVANT REGULATIONS IN THE FOLLOWING DIRECTIVES:

2006/42/CE	**2006/42/EC**
2014/30/UE	**2014/30/EU**

ORGANISMO NOTIFICATO CHE HA EFFETTUATO L’ESAME CE DI TIPO *NOTIFIED BODY WHICH DELIBERATED ON THE “EC” TYPE EXAMINATION CERTIFICATE*	***KIWA CERMET ITALIA S.p.A. NB 0476*** ***VIA CADRIANO, 23*** ***40057 CADRIANO di GRANAROLO (BO)***
NUMERO DI ATTESTATO D’ESAME CE DI TIPO *NUMBER OF “EC” TYPE EXAMINATION CERTIFICATE*	***C09E223/10***

PERSONA AUTORIZZATA A COSTITUIRE IL FASCICOLO TECNICO: *PERSON AUTHORISED TO PRODUCE THE TECHNICAL FILE:*	***SCM GROUP spa Via Emilia n° 77*** ***I-47921, Rimini (RN) - ITALY***

IL RAPPRESENTANTE DELEGATO DEL FABBRICANTE
THE MANUFACTURER’S REPRESENTATIVE

****CITTA’****, ****DATA****,

*** IDENTIF CAZIONE FIRMATARIO ***
FIRMA AUTOGRAFA

[IT] LINGUA ORIGINALE DICHIARAZIONE
[EN] TRANSLATION OF DECLARATION ORIGINAL LANGUAGE

THIS MANUAL IS PROPERTY OF SCM INDUSTRIA S.P.A - ANY TOTAL OR PARTIAL REPRODUCTION IS STRICTLY FORBIDDEN

DICHIARAZIONE “CE” DI CONFORMITA’

(AI SENSI DELL'ALLEGATO IIA DELLA DIRETTIVA 2006/42/CE
E DICHIARAZIONE "UE" AI SENSI DI ALTRE DIRETTIVE APPLICABILI)

"EC" DECLARATION OF CONFORMITY

(PURSUANT TO ATTACHMENT IIA OF DIRECTIVE 2006/42/EC
AND "EU" DECLARATION PURSUANT TO OTHER APPLICABLE DIRECTIVES)

IL FABBRICANTE: *THE MANUFACTURER:*	**SCM INDUSTRIA S.P.A** **VIA VALDICELLA 7 - 47892 GUALDICCIOLO (R.S.M.)**

DICHIARA CHE LA
DECLARES THAT

MACCHINA: *MACHINE:*	**COMBINATA UNIVERSALE PER LA LAVORAZIONE DEL LEGNO E DI MATERIE CON CARATTERISTICHE FISICHE SIMILI** **COMBINED UNIVERSAL MACHINE FOR WORKING WOOD AND MATERIAL WITH SIMILARY PHYSICAL CHARACTERISTICS**		
MARCA: *BRAND:*	***SCM***	N° DI SERIE: *SERIAL No.:*	
TIPO: *TYPE:*	***C-05***	ANNO DI COSTRUZIONE: *YEAR OF CONSTRUCTION:*	
MODELLO: *MODEL:*	**C 30G**		

FACSIMILE OF THE COPY OF THE “EC”
DECLARATION PRINTED ON WATERMARKED
PAPER THAT IS DELIVERED TO THE CUSTOMER

E’ CONFORME A TUTTE LE DISPOSIZIONI PERTINENTI DELLE SEGUENTI DIRETTIVE:
COMPLIES WITH ALL THE RELEVANT REGULATIONS IN THE FOLLOWING DIRECTIVES:

2006/42/CE	**2006/42/EC**
2014/30/UE	**2014/30/EU**

ORGANISMO NOTIFICATO CHE HA EFFETTUATO L’ESAME CE DI TIPO *NOTIFIED BODY WHICH DELIBERATED ON THE “EC” TYPE EXAMINATION CERTIFICATE*	***KIWA CERMET ITALIA S.p.A. NB 0476*** ***VIA CADRIANO, 23*** ***40057 CADRIANO di GRANAROLO (BO)***
NUMERO DI ATTESTATO D’ESAME CE DI TIPO *NUMBER OF “EC” TYPE EXAMINATION CERTIFICATE*	***C09E223/11***

PERSONA AUTORIZZATA A COSTITUIRE IL FASCICOLO TECNICO: *PERSON AUTHORISED TO PRODUCE THE TECHNICAL FILE:*	***SCM GROUP spa Via Emilia n° 77*** ***I-47921, Rimini (RN) - ITALY***

IL RAPPRESENTANTE DELEGATO DEL FABBRICANTE
THE MANUFACTURER’S REPRESENTATIVE

****CITTA’****, ****DATA****,

*** IDENTIF CAZIONE FIRMATARIO ***
FIRMA AUTOGRAFA

[IT] LINGUA ORIGINALE DICHIARAZIONE
[EN] TRANSLATION OF DECLARATION ORIGINAL LANGUAGE

THIS MANUAL IS PROPERTY OF SCM INDUSTRIA S.P.A - ANY TOTAL OR PARTIAL REPRODUCTION IS STRICTLY FORBIDDEN

THIS MANUAL IS PROPERTY OF SCM INDUSTRIA S.P.A - ANY TOTAL OR PARTIAL REPRODUCTION IS STRICTLY FORBIDDEN

INDEX

1 GENERAL INFORMATION 1

1.1 Aim of the handbook 3

1.2 Machine identification 5

1.3 Mail contact 6

1.4 Notes for the user 7

1.4.1 Abbreviations used in this handbook 7

1.4.2 Enclosed documentation 7

1.5 Symbols used in this handbook 8

1.6 Symbols on the machine 10

1.7 Machine description 14

1.8 Conditions foreseen for the use 16

1.9 Tools which may be used 16

1.10 Working environment 17

1.11 Incorrect use that can be reasonably expected 17

1.12 Residual risks 18

1.13 Operator's training 18

1.14 Safety rules 19

1.14.1 Personal safety 19

1.14.2 Machine safety 20

1.14.3 Tools safety 21

1.14.4 Working area safety 22

1.14.5 Maintenance safety 22

1.14.6 Safe working practise 23

1.15 Emergency conditions 26

1.16 Machine removal - Storing - Demolition 26

1.16.1 Out of order machine 26

2 EMERGENCY AND SAFETY DEVICES 1

2.1 Arrangement and description of emergency devices (Fig. 2.1) 2

2.2 Arrangement and description of safety devices (Fig. 2.2) 4

3 TECHNICAL SPECIFICATIONS 1

3.1 Dimensions of workpiece to be thicknessed 2

3.2 Technical data 6

3.3 Standard accessories 9

3.4 Optional accessories 11

THIS MANUAL IS PROPERTY OF SCM INDUSTRIA S.P.A - ANY TOTAL OR PARTIAL REPRODUCTION IS STRICTLY FORBIDDEN

INDEX

3.5 Noisiness level 12
3.5.1 Dust emission 16
3.6 Overall dimensions 17
3.7 Working area 18

4 INSTALLATION 1
4.1 Unloading the machine 4
4.2 Machine positioning 6
4.3 Fitting the parts demounted for transport reasons 8
4.3.A Displacing wheels - Assembly 8
SAW / SAW - SPINDLE MOULDER 10
4.3.11 Table for sliding table - installation 10
4.3.12 Fitting the guard for saw blade and scorer 12
4.3.14 Fitting the additional tables 14
4.3.14.2 Fitting the additional table at exit side 14
4.3.24 Fitting the supporting frame 15
4.3.24.2 Fitting the rest rule 20
4.3.32 Plane and saw fence - Installation 22
4.3.40 Riving knife fitting 24
4.3.41 Fitting the saw blade 24
SURFACE PLANING AND THICKNESSING MACHINE 26
4.3.47 Bridge guard fitting 26
4.3.48 Planing fence - Assembly 27
SPINDLE MOULDER 28
4.3.52 Tenoning table and guard - Assembly 28
4.3.73 Fitting guards 29
4.3.73.1 Spindle moulder hood guide 29
4.3.73.4 Tenoning hood-fence unit 30
4.3.73.5 Guard for milling at the spindle 31
4.3.82 Tool fitting - SAFETY NOTES 33
4.3.82.1 Tool fitting 34
4.4 Electric connection and grounding 37
4.4.1 Requisites for the electricity supply system 37
4.4.2 Electric connection 40
4.4.3 Check the correct connection 40
4.5 Connection to the suction system 42

THIS MANUAL IS PROPERTY OF SCM INDUSTRIA S.P.A - ANY TOTAL OR PARTIAL REPRODUCTION IS STRICTLY FORBIDDEN

INDEX

5 CONTROLS 1
5.1 Controls board 2
5.2 Emergency buttons 3
5.4 General controls before machine starting 5
5.4.1 Profiling operations 6
5.4.2 Milling at the spindle (shaping) 6
5.4.3 Tenoning 6
5.5 Machine start-up - shutdown 8

6 SAW UNIT USE AND ADJUSTMENT 1
6.1 Riving knife adjusting 2
6.3 Axis positioning 4
6.3.1 Height adjusting of the saw unit 4
6.3.2 Saw blade tilting 4
6.4 Correct use for circular saw 5
6.8 Guard adjusting 6

7 SUPPORTING FRAME AND FENCE FOR PARALLEL CUTS: USE AND ADJUSTMENT 1
7.1.3 Splinter guard adjustment 2
7.4 Use of the ruler 4
7.14 Manual fence for parallel cuts 6
7.14.1 Setting to zero the fence for parallel cuts 6
7.14.2 Operation 8
7.23 Use of sliding table and frame for large panels 12
7.23.1 Aluminium sliding table 12
7.23.6 Use of the presser unit 13
7.24 Example: longitudinal cut 14
7.24.1 First cut 14
7.24.2 Second cut (squaring) 15
7.24.3 Third cut 15
7.24.4 Fourth cut 16
7.24.5 Cut for obtaining pieces with opposite sides parallel 18

7a SURFACER USE AND ADJUSTING 1
7A.1 Knife adjustment 2

THIS MANUAL IS PROPERTY OF SCM INDUSTRIA S.P.A - ANY TOTAL OR PARTIAL REPRODUCTION IS STRICTLY FORBIDDEN

INDEX

7A.2 Knife replacing 5
7A.4 Replacing the throw-away knives 6
7A.5 Helicoidal planer - Tips replacement 8
7A.6 Surfacing tables adjusting 10
7A.6.1 Inlet table 10
7A.6.2 Outlet table 11
7A.8 Fence 12
7A.8.1 Longitudinal shifting 12
7A.8.2 Tilting 12

8 USE AND ADJUSTMENT OF MORTISER 1
8.1 Fitting the parts demounted for transport reasons 2
8.1.1 Mortiser fitting 2
8.1.2 Spindle bits - assembly 4
8.2 Mortiser use 6
8.3 Adjustments 8
8.3.1 Slot depth limitation 9
8.3.2 Slot width limitation 10
8.3.3 Height adjusting 11

9 THICKNESSING USE AND ADJUSTING 1
9.1 Preliminary adjustment for passing from planing to thicknessing 2
9.1.1 Machine with manual table lifting 2
9.2 Adjustment to pass from thicknessing to surface planing 4
9.2.1 Machine with manual table lifting 4
9.4 Automatic feed and speed change 6
9.5 Manual adjusting of thicknessing table 7
9.9 Safety guards 8
9.10 Knife adjustment 10
9.11 Knife replacing 10
9.12 Replacing the throw-away knives 10
9.12A Helicoidal planer - Tips replacement 10

9a OPERATIONS AND ADJUSTMENTS OF SPINDLE 1
9A Safety notes 3
9A.1 Adjustments 4

THIS MANUAL IS PROPERTY OF SCM INDUSTRIA S.P.A - ANY TOTAL OR PARTIAL REPRODUCTION IS STRICTLY FORBIDDEN

INDEX

9A.1.1 Spindle height adjusting 4
9A.1.1.1 Spindle height adjusting 4
9A.3 Spindle speed selection 6
9A.3.1 Speed change 7
9A.3.1.1 Speed change 8
9A.6 Rule on tenoning table 10
9A.6.1 Rule rotation 10
9A.6.2 To move the rule up to the tool 10
9A.8 Using the tenoning table 12
9A.8.1 Tenoning 14
9A.8.1.1 Clamping arm use 14
9A.8.2 Oblique tenons 16
9A.8.2.1 Clamping arm use 16
9A.33 Adjustable Hood-Fence unit 18
9A.33.1 Adjust spindle moulder hood guide for moulding without removal 20
9A.33.2 Adjust spindle moulder hood for moulding with removal. 22
9A.33.3 Use of hood-fence for small pieces 24
9A.33.5 Working examples 25
9A.44 Tenoning hood 28
9A.44.1 Adjusting 28
9A.50 Pressure unit for profiling 30
9A.50.1 Adjusting 32
9A.55 Guard for milling at the spindle 34
9A.55.2 Adjusting 34
9A.55.3 Working examples 36
9A.55.4 Maintenance 37

10 USE AND ADJUSTMENT OF PLANER SPINDLE GUARD AND SAFE WORKING 1
10.1 Cutterblock guard 2
10.1.1 Description 2
10.1.2 Guard adjusting 2
10.3 Procedures for safe working 4
10.3.1 Examples 4
10.3.1.1 Surfacing workpieces of thickness less 75 mm 4
10.3.1.2 Straightening 6
10.3.1.3 Surfacing and straightening pieces thicker than 75 mm 8

THIS MANUAL IS PROPERTY OF SCM INDUSTRIA S.P.A - ANY TOTAL OR PARTIAL REPRODUCTION IS STRICTLY FORBIDDEN

INDEX

10.3.1.4 Surfacing pieces of square section 10
10.3.1.5 Surfacing short pieces 11
10.3.1.6 Straightening short pieces 12
10.3.1.7 Chamfering along the fence 13
10.3.1.8 Surfacing workpieces with small section 14
10.3.1.9 Straightening workpieces of small section 15
10.5 Safety notes 16

15 PUSHER 1
15.1 Pusher 2

20 MAINTENANCE 1
20.1 Machine cleaning 3
20.2 Scheduled maintenance 8
20.3 Lubrication 15
20.7 Check of safety devices 18
20.7.1 Spare parts that affect the operator's health and safety 19
20.18 Replacing the belts 22
20.18.1.A Saw blade spindle 22
20.18.3 Moulder 24
20.18.4 Belts replacing 26
20.23 Belt stretching 28
20.23.1.A Saw blade spindle 28
20.23.3 Moulder 30
20.23.4 Belt tension adjusting 32
20.28 Making the parts which get worn 34
20.28.1 Replacing the chip breaker 34
20.37 Troubles - causes - what to do 35
20.60 Unscheduled maintenance 39

THIS MANUAL IS PROPERTY OF SCM INDUSTRIA S.P.A - ANY TOTAL OR PARTIAL REPRODUCTION IS STRICTLY FORBIDDEN

INDEX

1.1 Aim of the handbook 3

1.2 Machine identification 5

1.3 Mail contact 6

1.4 Notes for the user 7

1.4.1 Abbreviations used in this handbook 7

1.4.2 Enclosed documentation 7

1.5 Symbols used in this handbook 8

1.6 Symbols on the machine 10

1.7 Machine description 14

1.8 Conditions foreseen for the use 16

1.9 Tools which may be used 16

1.10 Working environment 17


1.11 Incorrect use that can be reasonably expected 17


1.12 Residual risks 18

1.13 Operator's training 18


1.14 Safety rules 19


1.14.1 Personal safety 19


1.14.2 Machine safety 20


1.14.3 Tools safety 21


1.14.4 Working area safety 22


1.14.5 Maintenance safety 22

1.14.6 Safe working practise 23

1.15 Emergency conditions 26

1.16 Machine removal - Storing - Demolition 26

1.16.1 Out of order machine 26

 THIS MANUAL IS PROPERTY OF SCM INDUSTRIA S.P.A - ANY TOTAL OR PARTIAL REPRODUCTION IS STRICTLY FORBIDDEN

1.1 AIM OF THE HANDBOOK

(ev-1-1_0.0)

Responsible for the introduction of the machine onto the EU market in compliance with article 9, paragraph 2 of the EMC 2004/108/EC Directive
SCM GROUP S.p.A. Via Emilia n.77, I-47921, Rimini (RN) - ITALY

This handbook has been written by the machine manufacturer and is an integrating part of the machine[2].
The information serves for qualified technicians[3].

With this handbook we wish to give you all information regarding to the use and maintenance of the machine: in this way you are sure to protect the production as well as the equipments.

The handbook defines the proper use of the machine and gives all information necessary for:
- right use of the machine
- working economy
- long operation life

If the instructions are always kept, it is possible to guaranty safety conditions for the operator, safe machine operation, service economy and a longer life of the machine.

To make the easier, the handbbok is divided in proper sections.
To quickly find the subject, see the Contents.



NOTE-INFORMATION:
some images present in this handbook may:
- not exactly correspond to the real machine version when this does not influence the validity of the information and instructions described and does not prejudice the safe operation.
- Be indicated without safety guards in order to make the parts described in the text more visible.



DANGER-WARNING:
the safety guards are necessary to ensure the safe machine operation and the working without the safety guards is forbidden.

SCM sales organization is always at your disposal for any technical problem (reparation, spare part delivery etc.) and to improve your business.
Keep this handbook for future information besides it shall always be with the machine.
SCM is not responsible for damages caused by wrong use or maintenance of the machine.

For any technical problem apply to SCM dealer:

[2] The definition "machine" replaces "C 26G" - "C 30G" machine name.

[3] Technicians who, thanks to their technical background and experience, are able to recognize and to avoid possible dangers during:
- the machine transport
- the installation
- the machine use and maintenance.

THIS MANUAL IS PROPERTY OF SCM INDUSTRIA S.P.A - ANY TOTAL OR PARTIAL REPRODUCTION IS STRICTLY FORBIDDEN

1.2 MACHINE IDENTIFICATION

(gg-1-2_0.0)

Machine data are punched on the metallic plate applied to the side of the machine frame.

Designation		Abbreviated, conventional description of the machine designation and its function
Marca		Merchandise mark
Anno		Production year
N° Serie		Serial number
kg		Weight (kg)
Tipo		Machine type
Modello		Machine model
Un	V	Rated voltage (volt)
~		Phases number (alternate current)
In	A	Rated current (ampere)
F	Hz	Frequency (hertz)
Icc.	kA	Short circuit breaking capacity of the protective device (kA)
w.d.		Wiring diagram number
Comp.		Machine configurations
Ref.		Internal references



1.3 MAIL CONTACT

(gg-1-3_0.0_ce)

Writing or telephoning to the dealer or to SCM for problems concerning your machine, always specify the following information:

1) machine model
2) serial number
3) voltage and frequency
4) purchase date
5) name of the dealer where the machine was bought
6) detailed information about the trouble
7) detailed information about the working to be carried out
8) period of use - number of working hours

Manufacturer's address:

SCM INDUSTRIA S.p.A.
Via Valdicella, 7
47892 - GUALDICCIOLO - (R.S.M.)
Web: www.scmgroup.com
Email: minimax@scmgroup.com

Assistance Department
from Italy: Tel. 0549/876910 - Fax. 0549/999604

from abroad: Tel. 00378 - 0549/876912 - Fax. 00378 - 0549/999604
E-mail: minimax@scmgroup.com

Spare Parts Department
from Italy: Tel. 0541/674706 - Fax. 0541/674720

from abroad: Tel. 0039 - 0541/674706 - Fax. 0039 - 0541/674720
E-mail: spareparts@scmgroup.com

 THIS MANUAL IS PROPERTY OF SCM INDUSTRIA S.P.A - ANY TOTAL OR PARTIAL REPRODUCTION IS STRICTLY FORBIDDEN

1.4 NOTES FOR THE USER

(gg_1-4_0.0_ce)

The handbook describes all operations required for the normal maintenance of the machine.
Do not carry out any operation not described in this handbook.
All operations which require to desmount machine members as well as maintenance operations shall be carried out only by authorized technicians.
For the correct use of the machine carry out the proper instructions given in this handbook.
Only trained and authorized technicians may use the machine and carry out maintenance operations.
Keep the general safety norms as well as the rules of industrial medicine.
Keep this handbook for future necessity.

NOTE-INFORMATION:
- ***use only*** SCM ***parts. The manufacturer is not responsible for damages due to the use of not original parts.***

1.4.1 ABBREVIATIONS USED IN THIS HANDBOOK

(gg-1-41_0.0_ce)

pag.	=	page
fig.	=	figure
par.	=	paragraph
chap.	=	chapter
i.e.	=	example
ref.	=	reference
DPI	=	Individual protective equipment (IPE)

1.4.2 ENCLOSED DOCUMENTATION

(mmax_1-4-2_0.0)

The following attachments are an integral part of this instruction manual:

- Electrical diagrams (read the number of the electrical diagram on the identification plate placed on the machine in the "W.D." line).
- Spare parts catalogue

NOTE-INFORMATION:
the electrical diagrams are for the exclusive use of competent technicians, therefore they are only in Italian and English.

1.5 SYMBOLS USED IN THIS HANDBOOK

(gg-1-5_0.0_ce)

OPT	***OPTIONAL = devices indicated in list price available only upon request.***

	***Operator position.***

	***DANGER-WARNING: imminent dangers could cause serious injuries; careful attention is needed.***

	***NOTE-INFORMATION: technical, very important information.***

	***READ-MANUAL: indicates that before using the machine, you must read the instructions manual and understand all its parts***

	***FORBIDDEN: indicates manouvres, commands or others that cannot be carried out as they can create very dangerous situations for persons and damage the machine.***

	***CAUTION: suitable measures should be taken to prevent accidents or to prevent things from being damaged.***

	**MACHINE OFF STATUS** efore carrying out any type of maintenance and/or making any adjustment to the machine, all of the power supplies (electric and pneumatic) must be switched OFF. Make sure that the machine is stopped power supplies electric and pneumatic (if is present) must be switched OFF. Make sure that the machine is stopped and that it is impossible for it to start up unexpectedly (main switch in the “0” position and locked; compressed air cut-off valve closed and compressed air cut-off valve closed and locked).

THIS MANUAL IS PROPERTY OF SCM INDUSTRIA S.P.A - ANY TOTAL OR PARTIAL REPRODUCTION IS STRICTLY FORBIDDEN

Personnel who will be working on the machine must, apart from being professionally trained for the job, read the manuals paying particular attention to the safety regulations and the paragraphs relative to his area of competence. The machine operators are identified as follows:



ASSIGNED OPERATOR

A professionally trained operator who is at least 18 years old, in compliance with the laws in force in the country where the machine is being used, qualified to exclusively turn on, use, tool-up, set (only with the safety devices enabled and the machine turned off) and to switch off the machine, in full compliance with the instructions given in this with the instructions given in this manual.



MAINTENANCE ELECTRICIAN

A qualified technician (electrician with the technical/professional qualifications required by current regulations), authorized to exclusively carry out operations on the electric devices in making adjustments, performing maintenance and/or repairs, even with the power supply ON and the safety devices disabled (subject to the consent of the health and safety officer), in full compliance with the instructions given in this manual or in other specific documents furnished exclusively by the Manufacturer.



OPERATOR IN CHARGE OF MOVING THE MACHINE

A professionally trained operator who is at least 18 years old, in compliance with the laws in force in the country where the machine is being used, qualified to drive fork lift trucks, bridge cranes or cranes used to safely move the machine and/or parts of the used to safely move the machine and/or parts of the machine.



MAINTENANCE MECHANIC

A skilled technician qualifi ed to exclusively carry out operations on the mechanical, hydraulic and pneumatic parts of the machine, to make adjustments, perform maintenance and/or repairs, even with the safety device disabled (subject to the consent of the health and safety officer), in full compliance with the instructions given in this manual or in other specific documents furnished exclusively by the Manufacturer.



COMPANY HEALTH AND SAFETY OFFICER

A qualified technician, designated by the Client with the technical/professional qualifications required by current regulations relative to worker health and safety in the by current regulations relative to worker health and safety in the workplace.



MANUFACTURER'S TECHNICIAN

A qualified technician sent by the Manufacturer and/or Dealer who is authorized to provide required technical assistance, to perform routine and extraordinary maintenance operations and/or operations not referred to in this manual which require specific and detailed knowledge of the machine.

1.6 SYMBOLS ON THE MACHINE

(gc-1-6_0.0_ce)

CAUTION:
the operator must pay attention to the signs and plates fixed on the machine.

	***Danger due to electric power***	**- B -**
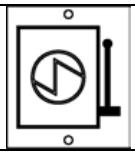	***It cuts electrical power supply to the machine***	**- D -**
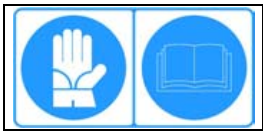	***Use gloves for handling the tools*** ***Read the manual and follow the manufacturer's instructions***	**- E -**
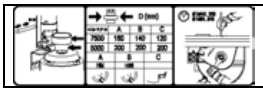	***Blade dimensions plate***	**- F -**
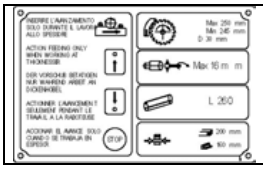	***Technical specifications plate***	**- G -**
	***Indicates the point where the hooks shall be applied for machine raising***	**- L -**
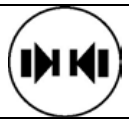	***Locking symbol***	**- M -**

THIS MANUAL IS PROPERTY OF SCM INDUSTRIA S.P.A - ANY TOTAL OR PARTIAL REPRODUCTION IS STRICTLY FORBIDDEN

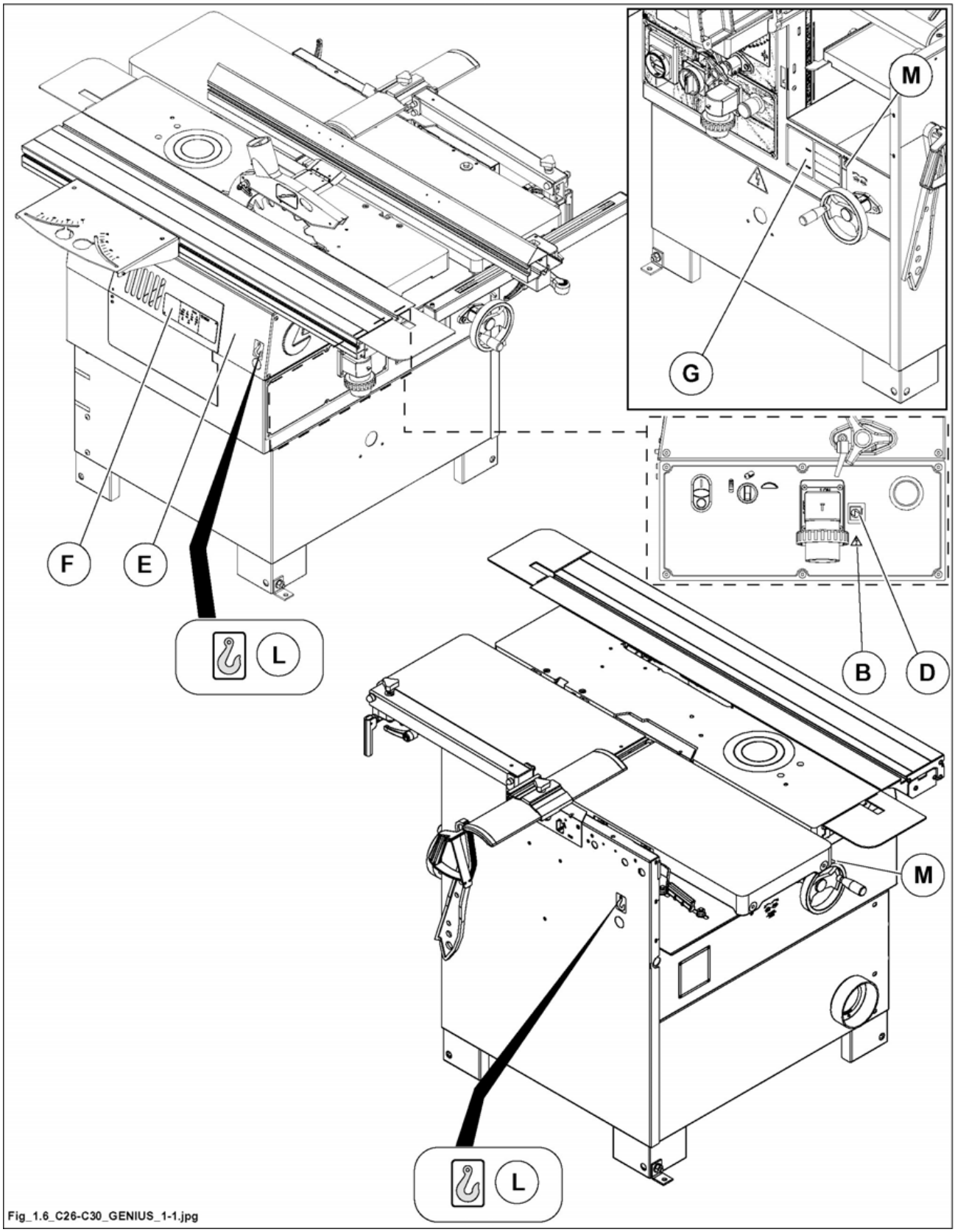

Fig. 1.6

	***Danger: cutting of upper limbs (rotating tools)***	**- N -**
	***Thicknessing table adjusting***	**- P -**
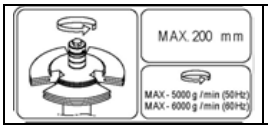	***Tenoning hood warning plate***	**- R -**
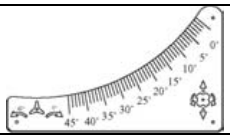	***Saw adjustment plate***	**- S -**
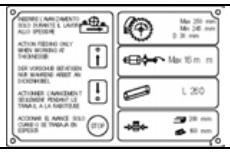	***Thickness switch on feed plate***	**- T -**
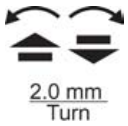	***Spindle moulder adjustment plate*** ***Indicates that every complete turn of the spindle raising handwheel moves the spindle shaft vertically by 2.0 mm***	**- W -**
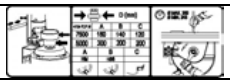	***Moulder spindle speed for tool type and diameter***	**- Z -**

THIS MANUAL IS PROPERTY OF SCM INDUSTRIA S.P.A - ANY TOTAL OR PARTIAL REPRODUCTION IS STRICTLY FORBIDDEN

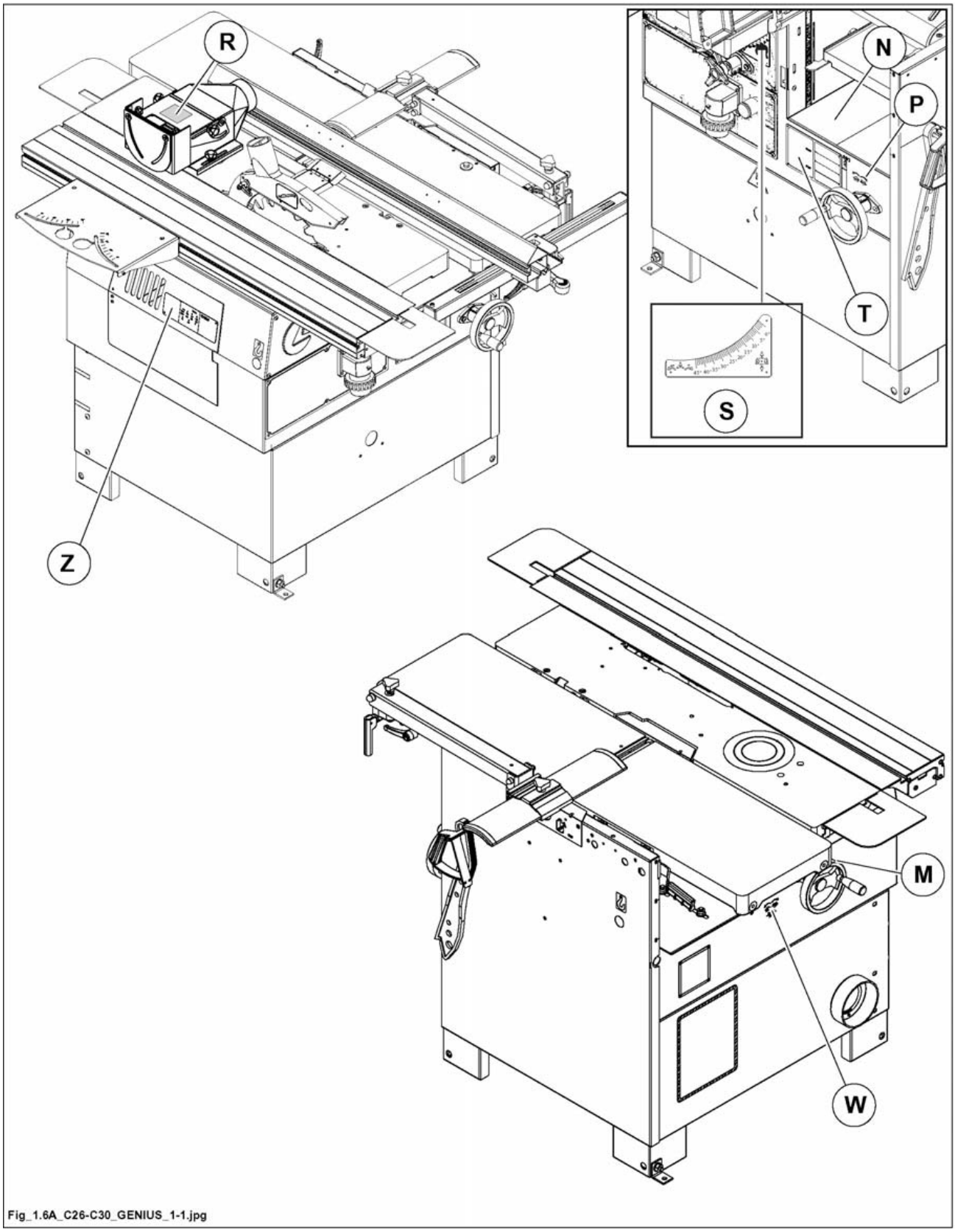

Fig. 1.6A

1.7 MACHINE DESCRIPTION

(ev_1.7-0.0)

The machine is a universal combined 6-working cycle machine.
Thanks to its working capacity and flexibility, this machine can meet any user's requirement.
The saw blade inclination makes it practical and easy to execute any type of machining. On request it may be equipped with a squaring frame.

The basic machine parts are herein referred to and described to make you quickly familiar with them since they shall be later mentioned in this manual. Please pay attention to the following descriptions:

1 - RULE FOR 90°-CUTS

2 - GUARD FOR SAW BLADES

3 - SAW AND SCORER ASSEMBLY

4 - WAGON-TYPE ALUMINIUM SLIDE

5 - CONTROL BOARD

6 - WORKING TABLE

7 - SUPPORTING FRAME

8 - PRESSER

9 - PUSHER

10 - SQUARING TABLE

11 - SAW INCLINATION LOCK

12 - MOULDER LIFTING

13 - THICKNESSING TABLE LIFTING

14 - SURFACE FENCE AND SAW

15 - WAGON LOCKING

16 - SPINDLE RAISE LOCK

17 - SAW LIFTING

18 - SAW INCLINATION

19 - REVERSIBLE STOPS

20 - SAW LIFTING LOCK

22 - WOOD STOP UNIT

23 - SURFACING TABLES

25 - THICKNESSING TABLES

26 - SLOTTER

28 - MOULDER UNIT

THIS MANUAL IS PROPERTY OF SCM INDUSTRIA S.P.A - ANY TOTAL OR PARTIAL REPRODUCTION IS STRICTLY FORBIDDEN

30 - ELECTRICAL PLUG

(**) - FIXED GUARDS THAT CAN BE REMOVED FOR MAINTENANCE OR CLEANING

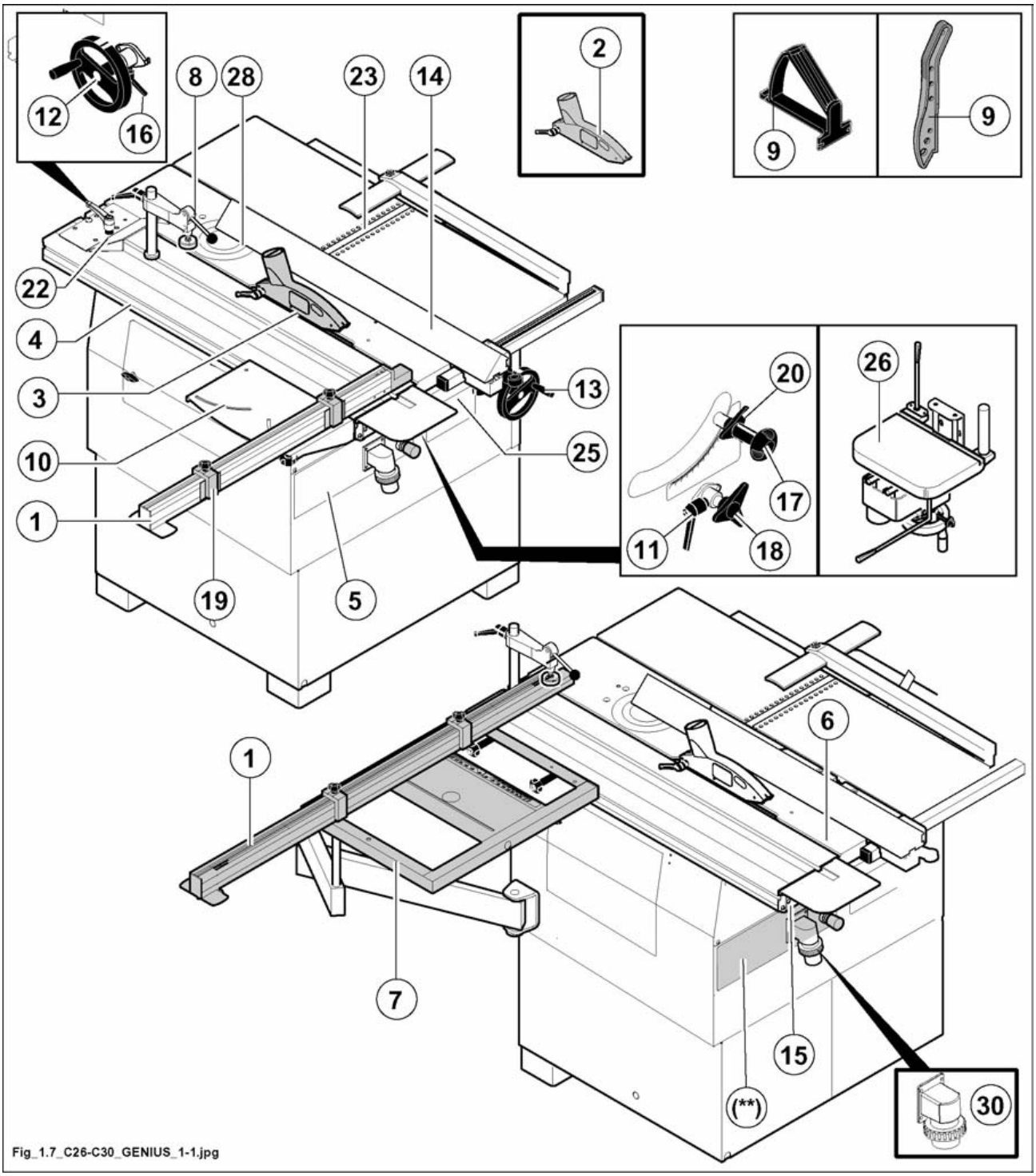

Fig. 1.7

1.8 CONDITIONS FORESEEN FOR THE USE

(ev_1-8_0.0)

This machine has been designed for cutting, squaring, milling, tenoning, drilling and thicknessing solid wood, ber boards, chipboard panels, ply-wood and laminboard, coated and non-coated.



DANGER-WARNING:
materials different from those quoted above, since dissimilar to wood, are thus prohibited: the user is solely responsible for any damage caused by machining such materials.



DANGER-WARNING:
the fitting of circular blades on the spindle is not permitted.
It is forbidden to insert shims between the spacer rings to willingly unbalance the tools.



DANGER-WARNING:
the material to be processed must not contain metal parts.



DANGER-WARNING:
use tools that are suitable for the material you want to work with.

1.9 TOOLS WHICH MAY BE USED

(ev_1-9_0.0)

-- SAW
The machine has been designed to use only tools for manual feed (marked MAN), in accordance with EN 847-1 / EN 847-2 Norm, proper for the material used.
By manual feed we mean the piece guidance by means of:
- the hand,
- the sliding table pushed by hand,
- the feeder.

-- MOULDER
The spindle moulder tools must be of the manual feed type (marked MAN).
Features of the tools required for manual feed:
- max. chip thickness 1.1 mm,
- tool shape round,
- chip exhaust space narrow.

As to the relation between tool and rotation speed see par. 9a.3.



DANGER-WARNING:
if milling tools with a cutting diameter of more than 16 mm are used, these must comply with EN 847-1 and EN 847-2.



DANGER-WARNING:
ONLY use milling cutters and blades which conform to the standards in force. NEVER use milling cutters and blades that are not stamped with the maximum speed of rotation and the manufacturer's details.

Helicoidal planer with tips (OPT)
Each tip-tool has 4 cutting edges so it can be utilized in maxim efficiency conditions without regrindings.

THIS MANUAL IS PROPERTY OF SCM INDUSTRIA S.P.A - ANY TOTAL OR PARTIAL REPRODUCTION IS STRICTLY FORBIDDEN

1.10 WORKING ENVIRONMENT

(gg_1-9_0.0)

The machine can work under these conditions:
Max. humidity 90%
Max. altitudine sea level: 1000 m (in case of higher altitude apply to the machine manufacturer)
Temperature: Min. +10° C ; Max. +35° C (macchina in operation)
Temperature: Min. +05° C ; Max. +35° C (machine off, not in working condition)
Always connect the machine to the suction system (see par. 4-5).
The machine may not be used in the open air.
The machine was designed for industrial use.
The machine may not operate in explosive rooms.

1.11 INCORRECT USE THAT CAN BE REASONABLY EXPECTED

(1.1_(01-2010))

- IT IS FORBIDDEN to remove the planer spindle during machining (Chap.10).
- IT IS FORBIDDEN to push small parts forwards without pusher (Chap.15).
- The fitting of circular blades on the spindle is not permitted.
- DO NOT use the machine if you are not an authorised and trained operator.
- DO NOT use the machine in ways that differ from those that the machine has been designed for and described in this manual.
- DO NOT use the machine without the required guards for every machining process or removing part of the guards (DO NOT disassemble the fixed and mobile guards, bypass the safety microswitches)
- DO NOT use the machine in ways that differ from those described above (Sect.1.8).
- DO NOT use the machine in environmental conditions that differ from the ones indicated above (Sect.1.10)
- DO NOT handle the tools without individual protective equipment (not supplied by SCM) for the hands and forearms.
- DO NOT use the machine without individual protective equipment from noise (ear plugs)(not supplied by SCM).
- DO NOT use the machine without extraction.
- DO NOT use the machine without having assessed the need to use individual protective equipment (not supplied by SCM) in relation to wood dust (we recommend the use of individual protective equipment: hard wood dust is carcinogenic).
- DO NOT use the machine if the area around the machine is not flat, well maintained and free of loose material (e.g. shavings and rejects).
- DO NOT machine different materials from the ones that the machine has been designed for and that are not set out in this manual (Sect.1.8).
- DO NOT machine materials of dimensions that the machine has not been designed for and that are not set out in this manual(Sect.3.1).
- DO NOT use tools not included in standard EN847-1 (/ EN 847-2) or of a size not compatible with the machine technical specifications.
- DO NOT make modifications to the machine.
- DO NOT allow children, domestic animals or any unauthorised personnel in the work area.
- IT IS FORBIDDEN to use tools that are not suitable for the work piece.

NOTE-INFORMATION:
performing modifications, voids the machine's Declaration of Conformity.
The user will be solely responsible for any damages resulting from improper use.

1.12 RESIDUAL RISKS

(ev_1-12_0.0)

Any machine tool may be potentially dangerous, do not forget it.
The final safety depends on you.

The machine is equipped with proper guards to ensure the safe machine operation.
Such guards are efficient if they are properly used and kept.

Even if the safety prescriptions are kept and the machine use occurs in accordance with the rules described in this handbook, the following risks may rise:

- **contact of the tool with the tenoning table.**
- **Contact with the standstill or rotating tool.**
- **Contact with the rotating spindle.**
- **Contact with rotating members (belts, pulleys, chains ...).**
- **Kickback of the workpiece or of its parts (splits): never stop in the position corresponding to the trajectory of possible split ejection.**
- **Ejection of tool inserts: never stop in the position corresponding to the trajectory of possibile split ejection.**
- **Dust inhalation in case of working without suction.**
- **Fulguration caused by contact with hot parts.**
- **Contrary direction of tool rotation due to wrong electric connection.**
- **Danger due to wrong working position of the operator.**
- **Danger caused by the wrong tool fitting.**
- **Possible squashing of the hands, with the fixed parts of the machine, during the sliding table motion.**

DANGER-WARNING:
ONLY FOR MOULDER UNIT
If there is no power supply the electronic brake does not work.
CAUTION! MOVING TOOLS. Do not insert hands in the danger area.

1.13 OPERATOR'S TRAINING

(ev_1-13_0.0)

It is compulsory that the machine operator is trained for the machine set up and operation.
The operators shall carefully read this handbook and consider the safety rules.

In particular:
a) the principles of the right use and operation of the machine, the adjustment of the fence and guards and the use of devices for special working.
b) The correct handling of the workpieces during the working.
c) The right position of the hands to the tools, before, during and after the cutting.
d) The right selection of the tools.
e) The piece feed to the tool which shall occur in the contrary direction to the spindle rotation direction.
f) The selection of the proper spindle speed required by the tool.

The operators are to be informed about the dangers due to the machine operation and about the precautions to be taken; besides the operator shall be able to carry out periodical tests on guards and safety devices.

THIS MANUAL IS PROPERTY OF SCM INDUSTRIA S.P.A - ANY TOTAL OR PARTIAL REPRODUCTION IS STRICTLY FORBIDDEN

SAFETY OVER ALL

1.14 SAFETY RULES

(gg_1-13_0.0)

1- Carefully read this instructions manual completely before starting the machine.
2- Carefully read the warning plates applied on the machine and comply with their indications.
3- Only correctly trained personnel can use the machine.
4- The operator training must include information about the dangers associated with using the machine and the precautions that he must observe.
5- The operator must trained on the correct use of the guards and safety devices.
Moreover he must be trained to perform regular controls on the aforementioned guards and safety devices.
6- The operator must never leave the machine unattended while it is operating.
7- This machine has been designed to be used by one operator.
8- This machine has been manufactured to provide maximum safety along with optimum performance.
9- Unauthorised changes to the machine release the manufacturer of any responsibility from any damages that may result.
10- Do not use the machine under the influence of alcohol, drugs or sleep inducing medication.

The safety depends on you. Any machine tool may be potentially dangerous, do not forget it.

1.14.1 PERSONAL SAFETY

(gg_1-13-1_0.0)

1- Before starting the machine the operator shall already have read the handbook.
Your eyes are the best safety device you have: carefully look before moving.
2- Experience teaches that there are various objects on a person that can cause injuries; take off rings, watches, bracelets; button your sleeves tightly around yuor wrists, take off ties that could be caught in tight places, keep hair gathered underneath proper nets (cap, elastics, hair pins). Use prescribed footwear usually recommended by all countries.

ALWAYS WEAR THE FOLLOWING INDIVIDUAL PROTECTIVE EQUIPMENT (IPE) (NOT SUPPLIED BY THE SCM**) BEFORE STARTING TO WORK:**

A- Proper aprons, e.g: aprons made of double leather with synthetic fiber cloth insertion (not supplied by SCM**) to protect the operator in case of splinters ejection.**
B- Glasses or protective shields for your eyes.
C- Proper means for ear protection.
D- Proper means against dust inhalation (masks).
E- Gloves for handling the blades.
F- Proper shoes with reinforced steel point and rubber soles.

1.14.2 MACHINE SAFETY

(ev_1-14-2_0.0)

DANGER-WARNING:
the machine must be fixed to the floor.
Fix the supplied angles (B fig. 4.2) to machine feet (A fig. 4.2) and fix on ground by means of expansion bolts (C fig. 4.2) (not supplied).

1- Be extremely careful when starting any working and periodically check the shields and safety devices.
Follow the instructions for grounding the machine's electrical system.
2- Never start the machine without having properly closed the covers in the area for blade and belt change.
3- Before starting the machine make sure that on the worktable or inside the guard there are no wood residues or parts which do not relate to the working.
4- Do not machine workpieces too small or too big for the machine.
See relative paragraph 3.1 "DIMENSIONS OF WORKPIECE TO BE MILLED".
Ensure that the pushers are intact and efficient.
5- Do not machine pieces with defects (deflections, clefts, knots, metallic parts, ...).
6- The guards and reference rules or fence halves are to be fitted and set when the machine is off.
7- Work only with all guards properly fitted and efficient.
The use of the machine is not permitted if such conditions are not kept.
8- In case of long pieces use roller tables or table extensions (not supplied by SCM).
9- It is necessary to connect all suction hoods to the suction system.
Before starting the working make sure that the suction system is switched on.
10- Test working to check the cutterblock adjustment may not carried out without the guards required.
11- Never try to remove the wastes or other parts of the workpiece from the working area when the machine is in operation.
12- Push the workpiece forwards by using a proper pusher or feeder.
13- After a given working period the transmission belts get slack; this may cause an increase of the time required to stop the tool. In that case immediately stretch the belts (see paragraph 20.23 or 20.24).
14- Periodically remove chips and dust to avoid fire risk: carry out this operation always with the machine off.

DANGER-WARNING:
the machine is not set up for use of the driver.

DANGER-WARNING:
in case of long machining pauses or machine stops remove the power supply cable socket.
In the switches with electronic brake, even with the motor stopped, the motor is not galvanically disconnected from the mains. The switch supplies the motor with voltage even after it is switched off.

THIS MANUAL IS PROPERTY OF SCM INDUSTRIA S.P.A - ANY TOTAL OR PARTIAL REPRODUCTION IS STRICTLY FORBIDDEN

1.14.3 TOOLS SAFETY

(ev_1-14-3_0.0)

FORBIDDEN:
the use of circular blades fitted to the spindle is not permitted.
It is forbidden to insert shims between the spacer rings to willingly unbalance the tools.

- Before fitting the tools, make sure that each support surface is clean, free from dents and perfectly flat.
- The tools shall be fitted and set when the machine is off, STILL TOOLS and with proper instruments (gauge, comparator).
- Make sure that the tools are perfectly balanced, sharp and well clamped.
  Not sharp tools reduce not only the quality of the finished piece but they increase the piece kickback danger.
- Fit the tools in the right working direction.
- For fastening the saw blade to the spindle, the use of rings or bushes not prescribed by SCM is forbidden.
- Never use deformed saw blades and do not exceed the speed limit indicated on them and prescribed by the tool manufacturer or by SCM.
  Make sure that the dimensional limits and the specifications of the tools suitable for the machine have been stored.
- Use only tools in accordance with EN 847-1 (/ EN 847-2) Norm and proper for manual feed.
- Before starting the machine make sure that the tools do not touch the fixed parts of the machine.
- Start working only when the tools have reached the right cutting speed.

THIS MANUAL IS PROPERTY OF SCM INDUSTRIA S.P.A - ANY TOTAL OR PARTIAL REPRODUCTION IS STRICTLY FORBIDDEN

1.14.4 WORKING AREA SAFETY

(gg_1-13-4_0.0)

The working area shall have a good lighting (at least 500 LUX) and a sufficient room (Chap. 3.7) so that the operator is always out of a dangerous area.
The floor shall be well leveled to avoid slipping danger and also free from loose material (e.g. waste, chips).
Only the authorized operator may stay in the working area.
The operator shall never stay in the trajectory where eventual splits or tool parts are ejected (Chap. 3.7).
If along this trajectory there is another work station (that is another machine) or a passage for persons, immediately install proper protective barriers.

1.14.5 MAINTENANCE SAFETY

(ev_1-14-5_0.0)

DO NOT THINK that the electric current is switched off during the maintenance .... CHECK IT PERSONALLY!
Strictly follow the indications provided for the frequency of the controls and maintenance of devices subject to checks and/or wear.

1- Before carrying out any of the operations make sure to cut the main electric power and disconnect socket T from plug S.

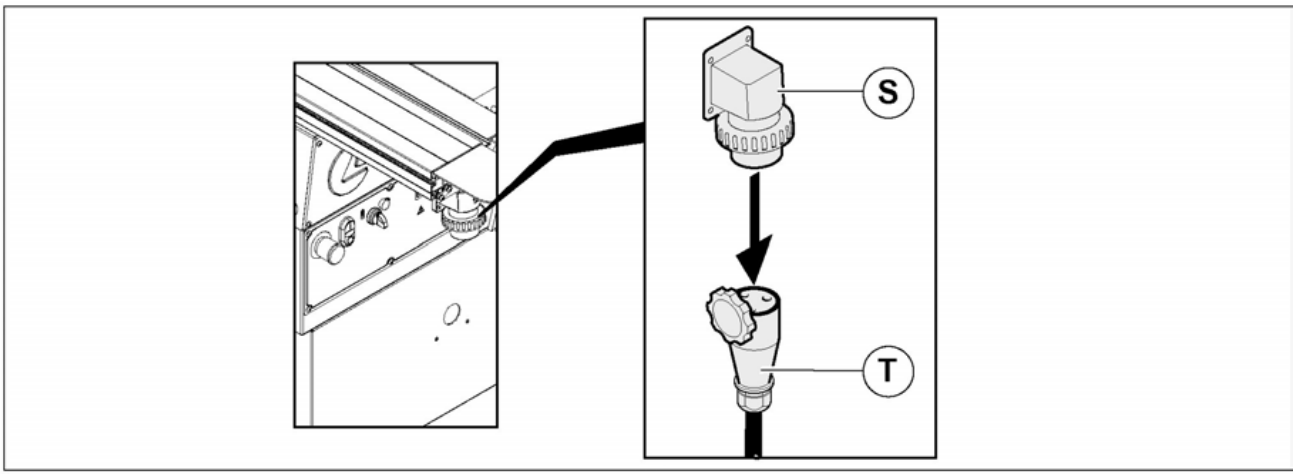

2- Completely stop the machine before cleaning operations and before removing any guard to carry out the maintenance.
3- The general cleaning of the machine (in particular of worktable) and of the surrounding floor is an important safety factor.
4- Regularly carry out cleaning and maintenance operations: remove chips and dust to avoid fire risk.
5- Use proper gloves for handling the tools.
6- The tools require a regular maintenance: when necessary replace them.
7- In case of any trouble concerning the machine, the guards and the tools, it is necessary to immediately take the proper measures.

THIS MANUAL IS PROPERTY OF SCM INDUSTRIA S.P.A - ANY TOTAL OR PARTIAL REPRODUCTION IS STRICTLY FORBIDDEN

1.14.6 SAFE WORKING PRACTISE

(dj_1-14-6_5.0)

(Copy of C enclosure of EN 848-1 European Norm)

C.1 General

These notes are given as examples for the safe operation of the machine.

C.2 Operator training

It is necessary that all operators of vertical spindle moulding machines are properly trained in the use, adjustment and operation of the machine.
In particular:

a) The principles of the correct set up operations and the use of the machine including the right use and adjusting of the devices for workpiece locking and guidance, the selection of shields and tools.
b) The safe handling of the workpiece during milling operations.
c) How to adjust safety equipment such as shapes, table extensions and mechanical strikes.
d) The use of personal ear and sight protective devices.

C.3 Stability

To ensure the correct and safe operation of the machine, it shall be stable and and securely fixed to the floor (see Chapter 4).

C.4 Machine and set up

Before carrying out the machine equipment :
a) make sure that the tools are sharp, selected and set according to the tool manufacturer instructions.
b) shut off the machine from the power supply
c) reduce the bore on the table in order to get the room between table and spindle as small as possible
d) handle the tools with extreme caution

C.5 Piece guidance

It is important to use:

a) the hood-fence unit to ensure during the milling the proper piece guidance.

b) When possible a proper element joining the fence halves in order to minimise the gap between the tool and the fence halves.

c) A pusher for the manual piece feed or when possible a feeder which may be switched off when it shall not be used.

d) Roller tables or table extensions to support long pieces.

C.6 Direction of rotation and rotation speed selection

C.6.1 Direction of rotation

It is very important that the tool rotates in the correct direction.and that the piece feed occurs in the direction contrary to direction of the spindle rotation.

C.6.2 Rotation speed selection

The operator must ensure that the right rotation speed has been selected and that the speed selected is proper for the tool fitted to the spindle.

C.7 Machine operation, guard selection and adjustment

Because of the variety of workings which can be carried out on vertical spindle moulding machines by using different spindles, toolholders and tools , no safeguard can be considered effective for all conditions.

Each working should be considered separately and the best practicable safeguard selected for that particolar job.
The cutter type, the tips projection and the height at which the tool is set, will determine the minimum diameter of the hole on the table.

This may be obtained by using the reducing rings supplied, thus reducing the risk that the workpiece oscillates or fits into the tools .

The guard shall enclose the tools to the greatest extent according to the working.

The distance between the fence halves shall be so large only to permit the tool rotation without contact.

If you use a removable feeder, the tools shall be covered as much as possible and trapping hazards are to be avoided.

If no feeder is used, pressers forming a tunnel, through which the workpiece can be fed, may be properly used; the pressers are to be used for milling at the fence.
It is necessary to reduce the room between fence halves and tool as much as possible.
In this case use a proper joining element .

C.8 Milling at the hood -fence unit; working on the entire piece length

To hinder the access to the tool during the milling at the hood-fence unit, it is necessary to use together with the fence a removale feeder with proper guards or vertical and horizontal pressure shoes eqipped with contact elements according to the workpiece size.

The following piece may be used to push the previous one; the last workpiece is milled at the end by using a pusher.

In case of thin pieces only the vertical pressure shoe may be used if its thickness is proper.

 THIS MANUAL IS PROPERTY OF SCM INDUSTRIA S.P.A - ANY TOTAL OR PARTIAL REPRODUCTION IS STRICTLY FORBIDDEN

C.9 Interrupted milling

To hinder the access to the tool during the not-through milling (interrupted milling) it is necessary to use together with the hood-fence unit a removable feeder or guards equipped with proper pressers according to the piece dimensions.

To hinder kickback of the piece use front and rear stops which are fastened to the fence, to the table or to the table extension.

We recommend to use a clamping template unless the piece may be hold in a safe way by the hands.
For clamping the piece use fast locking devices which operate with levers or cams.

C.10 Milling at the spindle

To hinder the access to the tool during the milling at the spindle use the proper guard and a clamping template.

C.11 Chamfering

To hinder the access to the tool during the oblique milling, besides the hood-fence unit use a special template or an auxiliary stop.

C.12 Climb milling

When possible it is necessary to avoid the clim milling.

C.13 Tenoning

To ensure a safe piece guidance to the tool, it is necessary to use the proper additional table foreseen by the manufacturer as well as the tenoning hood.

1.15 EMERGENCY CONDITIONS

(ev_1-15_0.0)

DANGER-WARNING:
in case of flooding of the room where the machine is housed, immediately disconnect the electrical power supply. Before starting work, have the machine checked by a specialised technician.

DANGER-WARNING:
in case of fire, immediately disconnect the electrical power supply and intervene using suitable fire extinguishers directing the jets at the base of the flames. Even if the machine has suffered no apparent damage, before restarting work have the machine checked by a specialised technician.

DANGER-WARNING:
if there is a mechanical block follow the following instructions to release the machine safely:
- isolate the machine electrically and pneumatically (to isolate the machine electrically rotate the main electrical switch to the 0 position and padlock it; disable the uninterruptible power supply, if one has been installed on the machine; to isolate the machine pneumatically rotate the lever at the pneumatic system inlet to the closed position and padlock it);
- contact the manufacturer's SERVICE centre (Par. 1.3).

A free space without obstructions must be provided around the machine (see par. 3.7), to allow fast escape in case of danger.

This machine must not be operated in explosive environments.

1.16 MACHINE REMOVAL - STORING - DEMOLITION

(ev_1-16_0.0)

To remove the machine, disconnect it from the electric and pneumatic system. Follow the instructions in chap. 4.

In case of extended inactivity of the machine, disconnect it from the electrical and pneumatic system. Thoroughly clean it as already described for ordinary cleaning and cover the work and sliding tables and the tool holder spindles with antirust protection. Do not store the machine in humid environments and protect it from atmospheric agents.

The machine is constructed in non-toxic unharmful materials. In case of demolition, separate the ferrous material from the plastic materials and send them to the respective scrap yards.

1.16.1 OUT OF ORDER MACHINE

(1.16.1)

The machine is manufactured with non-toxic or harmful materials; in case of scrapping separate the ferrous materials from the plastic materials and scrap respectively. We recommend contacting a specialised and authorised company, in compliance with the applicable laws and standards.

The operators moving the machine and the maintenance personnel must wear the IPE required for the risks involved with the type of use and in compliance with the applicable laws and standards.

To move and transport the machine refer to the instructions in chap. 4.

THIS MANUAL IS PROPERTY OF SCM INDUSTRIA S.P.A - ANY TOTAL OR PARTIAL REPRODUCTION IS STRICTLY FORBIDDEN

INDEX

2.1 Arrangement and description of emergency devices (Fig. 2.1).....2

2.2 Arrangement and description of safety devices (Fig. 2.2).....4

2.1 ARRANGEMENT AND DESCRIPTION OF EMERGENCY DEVICES (FIG. 2.1)

(ev-2-1.0.0)

Emergency equipment consists of special devices whereby operators can promptly stop the machine if necessary or in case of danger.

DANGER-WARNING:
emergency devices must never be removed or disconnected for no reason whatsoever ("Machine Directive" 2006/42/CE).

Description

A - Emergency mushroom-head push-button:
it causes an immediate emergency stop.

CAUTION:
periodically, check that the devices, listed above, are efficient.

DANGER-WARNING:
any anomalies found during the control of these devices, must be reported promptly to the manager , who will put the machine out of service and call the SCM ***Support Service.***

THIS MANUAL IS PROPERTY OF SCM INDUSTRIA S.P.A - ANY TOTAL OR PARTIAL REPRODUCTION IS STRICTLY FORBIDDEN

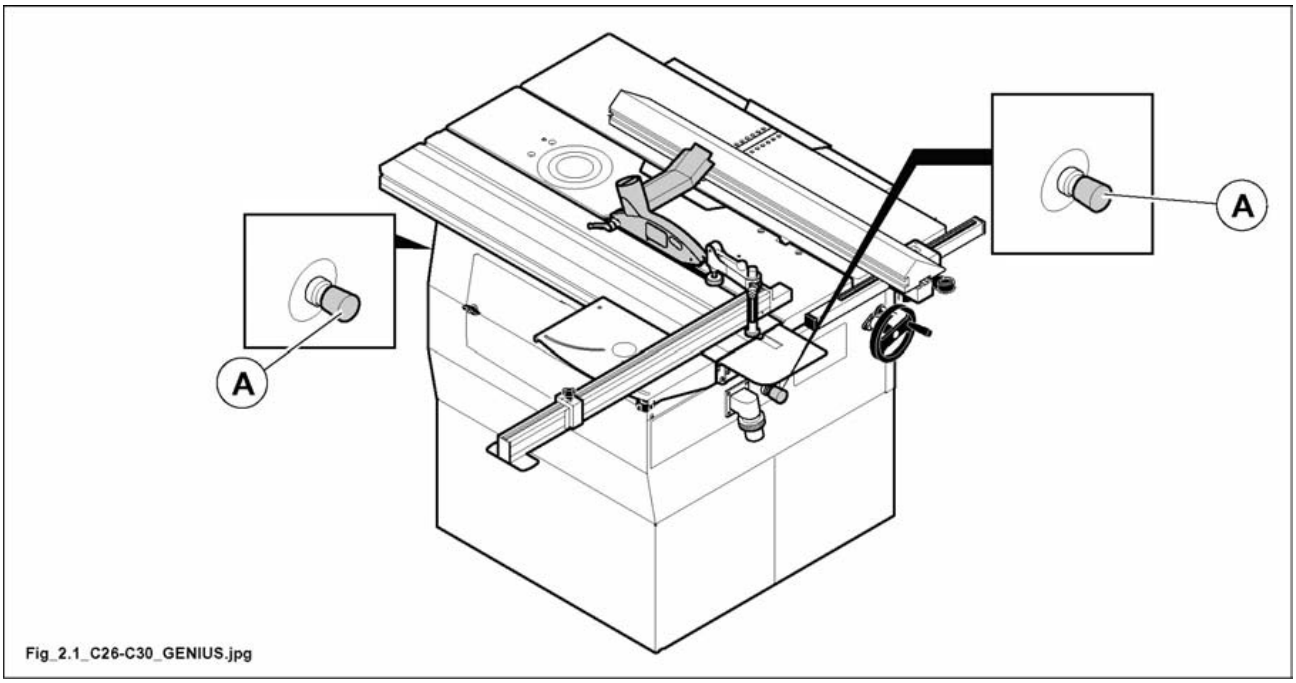

Fig. 2.1

2.2 ARRANGEMENT AND DESCRIPTION OF SAFETY DEVICES (FIG. 2.2)

(ev-2-2.0.0)

Safety devices are special accident-prevention guards whereby the machine is protected against possibly dangerous situations.

DANGER-WARNING:
safety devices must never be removed or disconnected for no reason whatsoever ("Direttiva macchine" 2006/42/CE).

Description

M - Thermal switch:
it connects and disconnects the power supply of the operating unit.

E1 - Guard for saw unit

Limit switches:
1) limit switch fitted to the motor housing door.
it commands the machine stop when the door R is open.
4) Plane microswitch:
stops machine when planing table Y is rotated. Enable the planer operating unit for processing to the thickness if the chip conveyor protection S is turned upside down.

Guards:
1P) guard for tenoning operations.
3P) Guard for shaping at the spindle.
4P) Guard for planer operations
5P) Hood-fence unit for profiling operations.
6P) Presser unit fitted to the hood-fence unit.

Suction hood under the table.

CAUTION:
periodically, check that the devices, listed above, are efficient.

DANGER-WARNING:
any anomalies found during the control of these devices, must be reported promptly to the manager , who will put the machine out of service and call the SCM ***Support Service.***

THIS MANUAL IS PROPERTY OF SCM INDUSTRIA S.P.A - ANY TOTAL OR PARTIAL REPRODUCTION IS STRICTLY FORBIDDEN

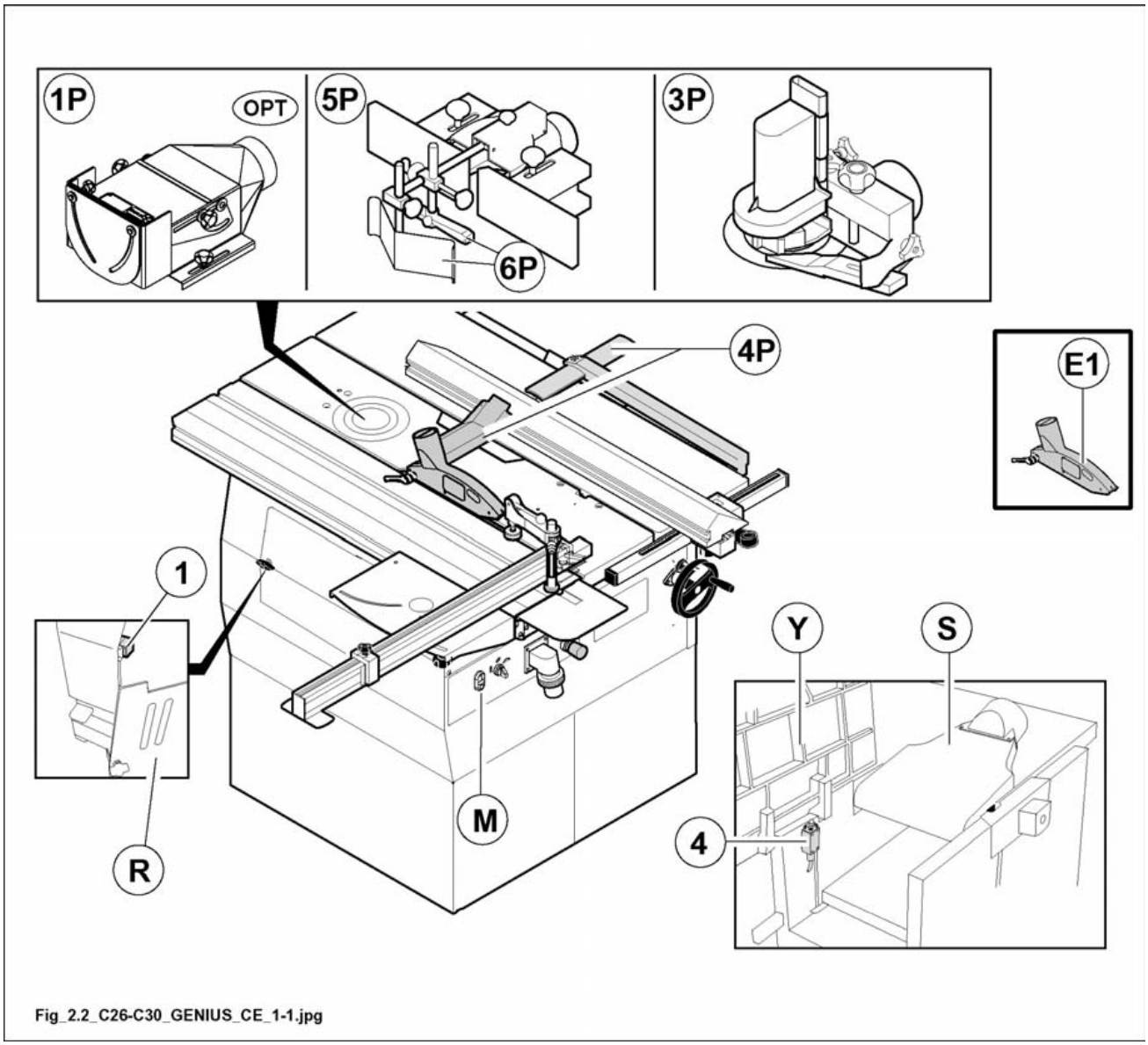

Fig. 2.2

INDEX

3.1 Dimensions of workpiece to be thicknessed 2

3.2 Technical data 6

3.3 Standard accessories 9

3.4 Optional accessories 11

3.5 Noisiness level 12

3.5.1 Dust emission 16

3.6 Overall dimensions 17

3.7 Working area 18

3.1 DIMENSIONS OF WORKPIECE TO BE THICKNESSED

(ev_3-1_0.0)

SAW

DIMENSIONS OF WORKPIECE TO BE MILLED			
Maximum cutting height at 90°	With a blade of Ø 250	67	mm
Maximum cutting height at 45°	With a blade of Ø 250	40	mm
Maximum cutting height at 90°	With a blade of Ø 245	65	mm
Maximum cutting height at 45°	With a blade of Ø 245	38	mm
Maximum length	When squared up	1200	mm
Maximum width (C 26G)	For cutting to the parallel guide	500	mm
Maximum width (C 30G)	For cutting to the parallel guide	550	mm

 THIS MANUAL IS PROPERTY OF SCM INDUSTRIA S.P.A - ANY TOTAL OR PARTIAL REPRODUCTION IS STRICTLY FORBIDDEN

MOULDER

DIMENSIONS OF WORKPIECE TO BE MILLED			
Thickness	Min. piece size in case of profiling operation	8	mm
Width	Min. piece size in case of profiling operation	8	mm
Length	Min. piece size in case of profiling operation	400	mm
Thickness	Max. piece size in case of profiling operation	230	mm
Width	Max. piece size in case of profiling operation	180	mm
Length	Max. piece size in case of profiling operation	1000 (∗)	mm
(∗) In case of longer pieces use rest tables			
Thickness	Min. size of solid wood piece in case of tenoning	20	mm
Width	Min. size of solid wood piece in case of tenoning	20	mm
Length	Min. size of solid wood piece in case of tenoning	220	mm
Thickness	Max. size of solid wood piece in case of tenoning	100	mm
Width	Max. size of solid wood piece in case of tenoning	140	mm
Length	Max. size of solid wood piece in case of tenoning	900	mm
Max. slot depth		75	mm

THIS MANUAL IS PROPERTY OF SCM INDUSTRIA S.P.A - ANY TOTAL OR PARTIAL REPRODUCTION IS STRICTLY FORBIDDEN

SURFACE PLANING MACHINE

Max. thickness under the guard		75 mm	
Max. length			**DANGER-WARNING: may be not defined; we recommend to use table extensions (not supplied by** SCM**) at entry and exit side in case of panels longer than 2000 mm.**
Max. width	C 26G	260 mm	
	C 30G	300 mm	
Min. thickness		**H_1**=30 mm	
		H_2=20 mm	
		H_3=80 mm	
Min. length		150 mm	**We recommend to use pushers (not supplied by** SCM**).**
			DANGER-WARNING: never machine shorter workpieces.
Min. width		**S_1**=10 mm	**We recommend to use pushers (not supplied by** SCM**).**
		S_2=15 mm	**DANGER-WARNING: never machine shorter workpieces.**
		S_3=15 mm	

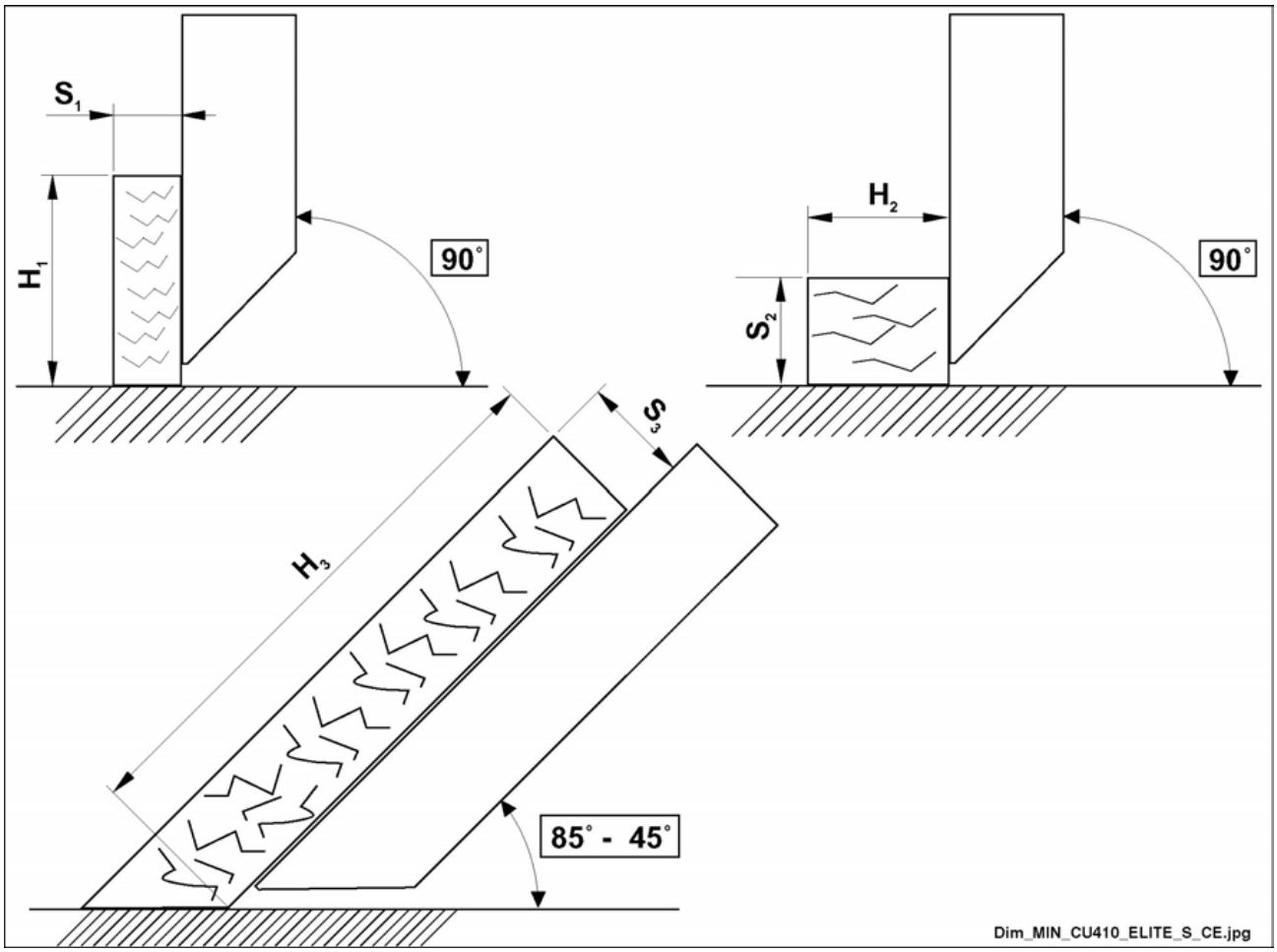

 THIS MANUAL IS PROPERTY OF SCM INDUSTRIA S.P.A - ANY TOTAL OR PARTIAL REPRODUCTION IS STRICTLY FORBIDDEN

THICKNESSING PLANER

Max. thickness		200 mm	
Max. length			**DANGER-WARNING: may be not defined; we recommend to use table extensions (not supplied by** SCM**) at entry and exit side in case of panels longer than 2000 mm.**
Max. width	C 26G	260 mm	
	C 30G	300 mm	
Min. thickness		3,0 mm	
Min. length		120 mm	**DANGER-WARNING: never machine shorter workpieces.**
Min. width		10 mm	**DANGER-WARNING: never machine shorter workpieces.**

3.2 TECHNICAL DATA

(ev_3-2_0.0)

SAW

GENERAL SPECIFICATIONS			
Fixed table dimensions		1040 x 224	mm
Slide dimensions		1140 x 200	mm
Blade inclination		da 90° a 45°	
Saw blade maximum diameter		Øi 30 x 250	mm
Saw blade minimum diameter		Øi 30 x 245	mm
Maximum projection at 90°	With a blade of 250 mm	75	mm
Maximum projection at 45°	With a blade of 250 mm	60	mm
Maximum projection at 90°	With a blade of 245 mm	72.5	mm
Maximum projection at 45°	With a blade of 245 mm	58	mm
Saw blade rotation speed		3900	r.p.m.
Saw blade stop time:		less than 10 seconds	
Motors:			
Saw motor power:	50 Hz	1,8	kW
	60 Hz	2,2	kW
Technical details: see data plate on the motor Duty cycle: S6 - 40% (excluded from the energy efficiency constraints of EC Commission Regulation 640/2009) Conditions of service: see Par. 1.10			
Net weight: see plate of machine identification			
Working voltage and frequency: see plate of machine identification			

THIS MANUAL IS PROPERTY OF SCM INDUSTRIA S.P.A - ANY TOTAL OR PARTIAL REPRODUCTION IS STRICTLY FORBIDDEN

MOULDER

GENERAL SPECIFICATIONS			
Worktable size:		1040 x 224	mm
Worktable height from the floor:		900	mm
Working spindle height:	Ø 30	75	mm
Max. tool diameter for rebating (with a perpendicular spindle)		Ø 160	mm
Max. tool diameter: moulding hood	with Ø 30 mm spindle	160	mm
Max. tool diameter: tenoning hood Ø 200 (OPT)		200	mm
Max. diameter of the tool disappearing under the table:		Ø 145 x h 35	mm
Vertical spindle adjusting:		~ 120	mm
Spindle rotation speed:	50 Hz	5000-7500	r.p.m.
	60 Hz	6000-8500	r.p.m.
Time required to stop the spindle:		less than 10 seconds	
Motors:			
Main motor power:	50 Hz	1,8	kW
	60 Hz	2,2	kW
Technical details: see data plate on the motor Duty cycle: S6 - 40% (excluded from the energy efficiency constraints of EC Commission Regulation 640/2009) Conditions of service: see Par. 1.10			
Basic machine weight: see plate of machine identification			
Working voltage and frequency: see plate of machine identification			

DANGER-WARNING:
the table lists the tool mass allowed based on its speed and diameter.

5000 (r.p.m.) (50 Hz) – 6000 (r.p.m.) (60 Hz)	
Diameter (mm)	**Weight (Kg)**
200	**4**

SURFACE PLANING AND THICKNESSING MACHINE

GENERAL TECHNICAL DATA			
Planer table total length	C 26G	1040	mm
	C 30G	1200	mm
Useful working length (Planer - Thicknesser)	C 26G	260	mm
	C 30G	300	mm
Max. depth of cut in one stroke (Thicknesser)		3	mm
Max. depth of cut in one stroke (Planer)		3	mm
Min. width of the piece to be machined (Thicknesser)		10	mm
Cutterblock diameter		60	mm
Knives	C 26G	25x3x260	N° 2
	C 30G	25x3x300	
Cutterblock speed (50 Hz)		5500	rpm
Time required to stop the cutterblock		less than 10 sec.	
Fence dimensions		1090x150	mm
Motors:			
Motor power	50 Hz	1,8	kW
	60 Hz	2,2	kW
Technical details: see data plate on the motor Duty cycle: S6 - 40% (excluded from the energy efficiency constraints of EC Commission Regulation 640/2009) Conditions of service: see Par. 1.10			
Planer guide tilt		90° - 45°	
Feed speed to thicknesser		6	m/min
Weight without mortiser:		see identification plate on the machine	

Helicoidal planer with tips (OPT)

TIP-TOOL (C 26G)	15x15x2,5	42
TIP-TOOL (C 30G)	15x15x2,5	48

SUCTION SPECIFICATIONS		
Saw suction mouth diameter	Ø 120	mm
Saw guard suction mouth diameter	Ø 60	mm
Spindle hood suction mouth diameter	Ø 120	mm
Moulding hood suction mouth diameter	Ø 100	mm
Tenoning hood suction mouth diameter (OPT)	Ø 120	mm
Planer and thicknesser hood suction mouth diameter	Ø 120	mm
Mortiser suction mouth diameter (OPT)	Ø 120	mm
Suction air speed: chips dry (chips wet)	20 (28)	m/sec
Suction air consumption [Ø 120 + Ø 60]	1018 (1425)	m³/h
Suction air consumption [Ø 120 + Ø 100]	1379 (1932)	m³/h
Suction air consumption [Ø 120 + Ø 120]	1628 (2280)	m³/h
Suction air consumption [Ø 120] (OPT)	814 (1140)	m³/h

THIS MANUAL IS PROPERTY OF SCM INDUSTRIA S.P.A - ANY TOTAL OR PARTIAL REPRODUCTION IS STRICTLY FORBIDDEN

3.3 STANDARD ACCESSORIES

(ev_3-3_0.0)

Trasformer for auxiliary circuit 110 V
Motor overload cutout
2 Brackets (for fastening the machine to the floor)

Pusher
Handle for pusher

Set of tools and wrenches for use and maintenance

SAW

Eccentric clamping

Wagon attachment
Sliding table made of aluminium alloy with motion on guides
Tile-shaped stop
1 Riving knives

Direct start of main motor

Manual height adjusting and tilting of saw unit

Suction hood Ø 120 mm, on the rear frame side
Hanging guard for saw blade and scorer with suction pipe of Ø 60 mm diameter

MOULDER

Manual mouvement of the spindle

Direct start of main motor
Auto-brake motor

Adjustable molder-fence unit
Shaping moulder hood

*) Guard of presser unit for moulding

*) Guard for machining at spindle

Set of spacer rings on spindle

Tool fixing device

*) Accessories supplied with machine to be mounted according to the type of machining to be carried out.

SURFACE PLANING AND THICKNESSING MACHINE

1.st top feed roller (inlet side): steel scored roller
One feed roller (exit side): steel roller

Height adjusting of thicknessing table by handwheel

Knife setting gauge
N° 2 knives
Suction hood of 120 mm diameter
Direct start of main motor

Planer spindle guards
Tilting guide for supporting pieces
Manual movement of table (planer) in infeed
Reading of removal (planer) with index on sliding scale

 THIS MANUAL IS PROPERTY OF SCM INDUSTRIA S.P.A - ANY TOTAL OR PARTIAL REPRODUCTION IS STRICTLY FORBIDDEN

3.4 OPTIONAL ACCESSORIES

(ev_3-4_0.0)

Motors power (three-phase) - S6 / 40%:
..... 2,2 kW - 50 Hz (2,6 kW - 60 Hz)

Motors power (single-phase) - S6 / 40%:
..... 1,8 kW - 50 Hz

Motors power (single-phase) - S1:
..... 1,8 kW - 60 Hz

Displacing wheels

SAW

Squaring frame with extension arm and extendable aluminium rule with stops

MOULDER

Tenoning table and hood Ø 200 mm (max. tool diameter 200 mm)
Anodised aluminium tables for moulder guide

Aluminium spindle moulder hood

Tenoning hood

Switch with electronic brake

SURFACE PLANING AND THICKNESSING MACHINE

Cutterblock with throw-away knives

Helicoidal planer with tips

Mortiser with:

- Table size	380X207	mm
- Longitudinal stroke	100	mm
- Trasverse stroke	120	mm
- Vertical stroke	75	mm
- Coupling of left-hand bit Ø max.	16	mm
- Suction hood diameter	120	mm
- Suction air speed - chips dry (chips wet)	20 (28)	m/sec
- Suction air consumption	814 (1140)	m^3/h
- Weight	~15	kg

- clamping arm
- selfcentering (OPT) chuck for bits of max. diameter ..... Ø max.16 mm

3.5 NOISINESS LEVEL

(ev_3-5_0.0)

DECLARED DUAL-NUMBER NOISE EMISSION VALUES in accordance with ISO 4871

SAW

Operating conditions – **Cutting with circular saw** (according to norm EN 1870-1:2007+ A1:2009)					
Measured size description		Reference norm	Uncertainity **K**	**Cutting with circular saw**	
				VSA	**LAV**
Lop: sound pressure level at operator station dB (A) and peak level [dB(C)]	Operator station	EN ISO 11202:2010	4 dB	77	86 [95]
	INPUT				
Lw: sound power level dB (A)		EN ISO 3744:2010	2 dB	85	92
The maximum istantaneus noise level pressure is under 130 dB (C).					
VSA : Idle working without suction			**LAV** : In operation		

 THIS MANUAL IS PROPERTY OF SCM INDUSTRIA S.P.A - ANY TOTAL OR PARTIAL REPRODUCTION IS STRICTLY FORBIDDEN

MOULDER

Operating conditions – **Profiling** (according to norm 848-1:2007+ A1:2009)					
Measured size description		Reference norm	Uncertainity **K**	**Profiling**	
				VSA	**LAV**
Lop: sound pressure level at operator station dB(A) and peak level [dB(C)]	Operator station	EN ISO 11202:2010	4 dB	84	89 [99]
	INPUT				
Lw: sound power level dB(A)		EN ISO 3744:2010	2 dB	89	94
The maximum istantaneus noise level pressure is under 130 dB (C).					
VSA : Idle working without suction		**LAV** : In operation			

Operating conditions – **Tenoning** (according to norm 1218-1:1999+ A1:2009)					
Measured size description		Reference norm	Uncertainity **K**	**Tenoning**	
				VSA	**LAV**
Lop: sound pressure level at operator station dB (A) and peak level [dB(C)]	Operator station	EN ISO 11202:2010	4 dB	77	89 [98]
	INPUT				
Lw: sound power level dB (A)		EN ISO 3744:2010	2 dB	85	98
The maximum istantaneus noise level pressure is under 130 dB (C).					
VSA : Idle working without suction		**LAV** : In operation			

SURFACE PLANING MACHINE

Operating conditions – **Surface planning** (according to norm EN 859:2007+ A1:2009)					
Measured size description		Reference norm	Uncertainity **K**	**Surface planning**	
				VSA	**LAV**
Lop: sound pressure level at operator station dB (A) and peak level [dB(C)]	Operator station	EN ISO 11202:2010	4 dB	76	91 [101]
	INPUT				
Lw: sound power level dB (A)		EN ISO 3744:2010	2 dB	84	97
The maximum istantaneus noise level pressure is under 130 dB (C).					
VSA : Idle working without suction		**LAV** : In operation			

THICKNESSING MACHINE

Operating conditions – **Thicknessing machine** (according to norm EN 860:2007+ A1:2009)					
Measured size description		Reference norm	Uncertainity **K**	**Thicknessing machine**	
Lop: sound pressure level at operator station dB (A) and peak level [dB(C)]	Operator station	EN ISO 11202:2010	4 dB	**VSA**	**LAV**
	INPUT			70	85 [93]
	OUTPUT			73	85 [94]
Lw: sound power level dB (A)		EN ISO 3744:2010	2 dB	84	96
The maximum istantaneus noise level pressure is under 130 dB (C).					
VSA : Idle working without suction		**LAV** : In operation			

 THIS MANUAL IS PROPERTY OF SCM INDUSTRIA S.P.A - ANY TOTAL OR PARTIAL REPRODUCTION IS STRICTLY FORBIDDEN



DANGER-WARNING:
the noise levels which have been measured are emission levels and not levels of safe working. The relation between emission levels and exposure levels may not be used to determine whether further precautions are required. Factors which influence the real exposure level for the operator include the exposure time, the room features, further sound sources (as for example number of the adjacent working machines). Also the exposure levels permitted are not the same for all countries. Thank to this information the operator to evaluate the risks and the dangers.

Some factors which reduce exposure to noise:
- correct tool choice (see Par. 1.9)
- correct speed selection (where adjustment is possible);
- tool and machine maintenance
- correct use of hearing protection
- type of material machined.

3.5.1 DUST EMISSION

(mmax_3-5-1_0.0)

DUST EMISSION	
Operating conditions – **Cutting, Surfacing, Thicknessing, Drilling, Moulder machining**	
Reference regulations: **BG-GS-HO- 05**	Dust emitted [mg/m^3]
Operator's site	< 2



DANGER-WARNING:
HARDWOOD SAWDUSTS ARE HARMFUL TO YOUR HEALTH



FORBIDDEN:
DO NOT USE COMPRESSED AIR.



DANGER-WARNING:
it is necessary to connect all suction hoods to the suction system.
Before starting the working make sure that the suction system is switched on.

THIS MANUAL IS PROPERTY OF SCM INDUSTRIA S.P.A - ANY TOTAL OR PARTIAL REPRODUCTION IS STRICTLY FORBIDDEN

3.6 OVERALL DIMENSIONS

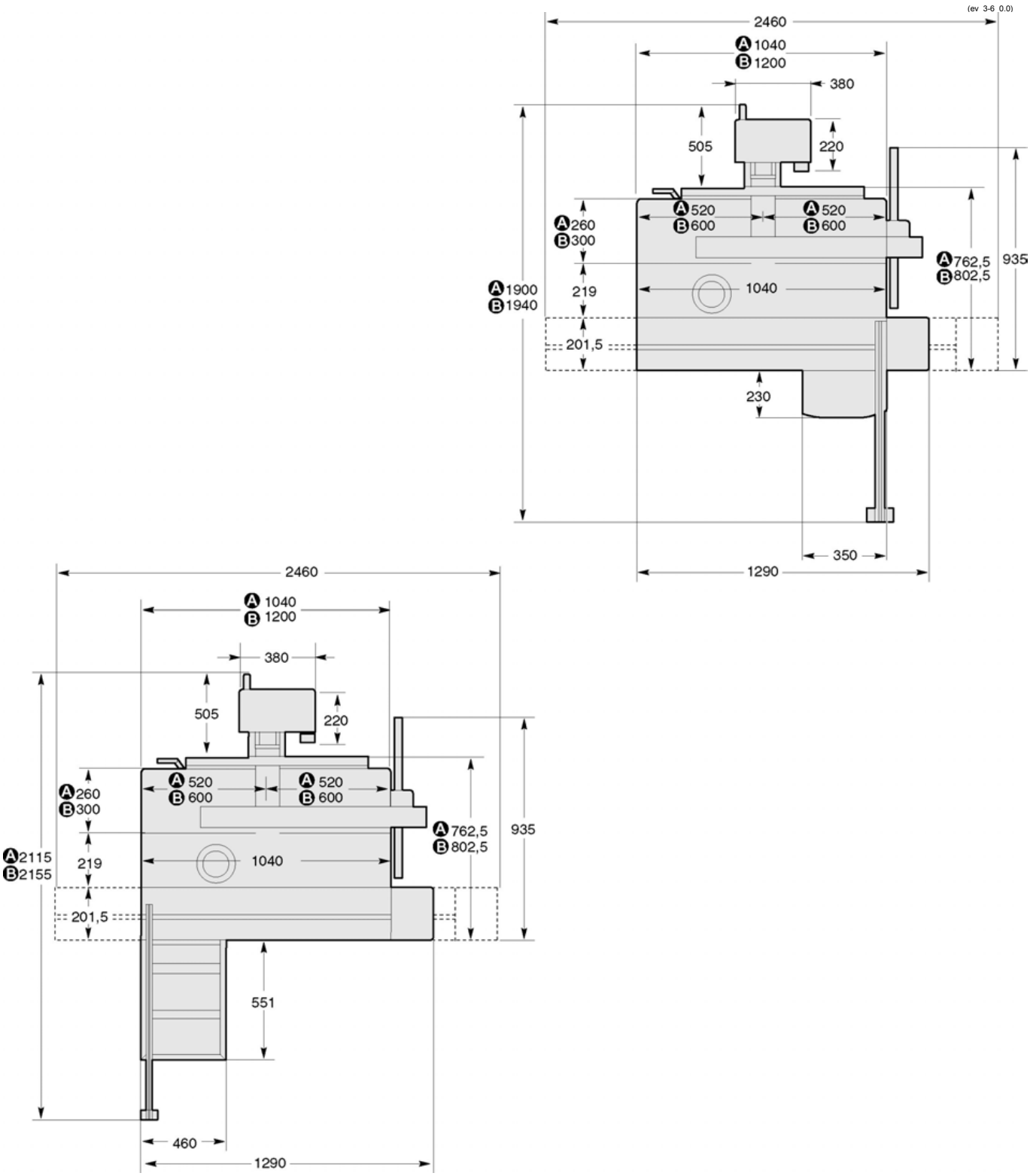

A = C 26G ..... B = C 30G

3.7 WORKING AREA

(ev_3-7_0.0)

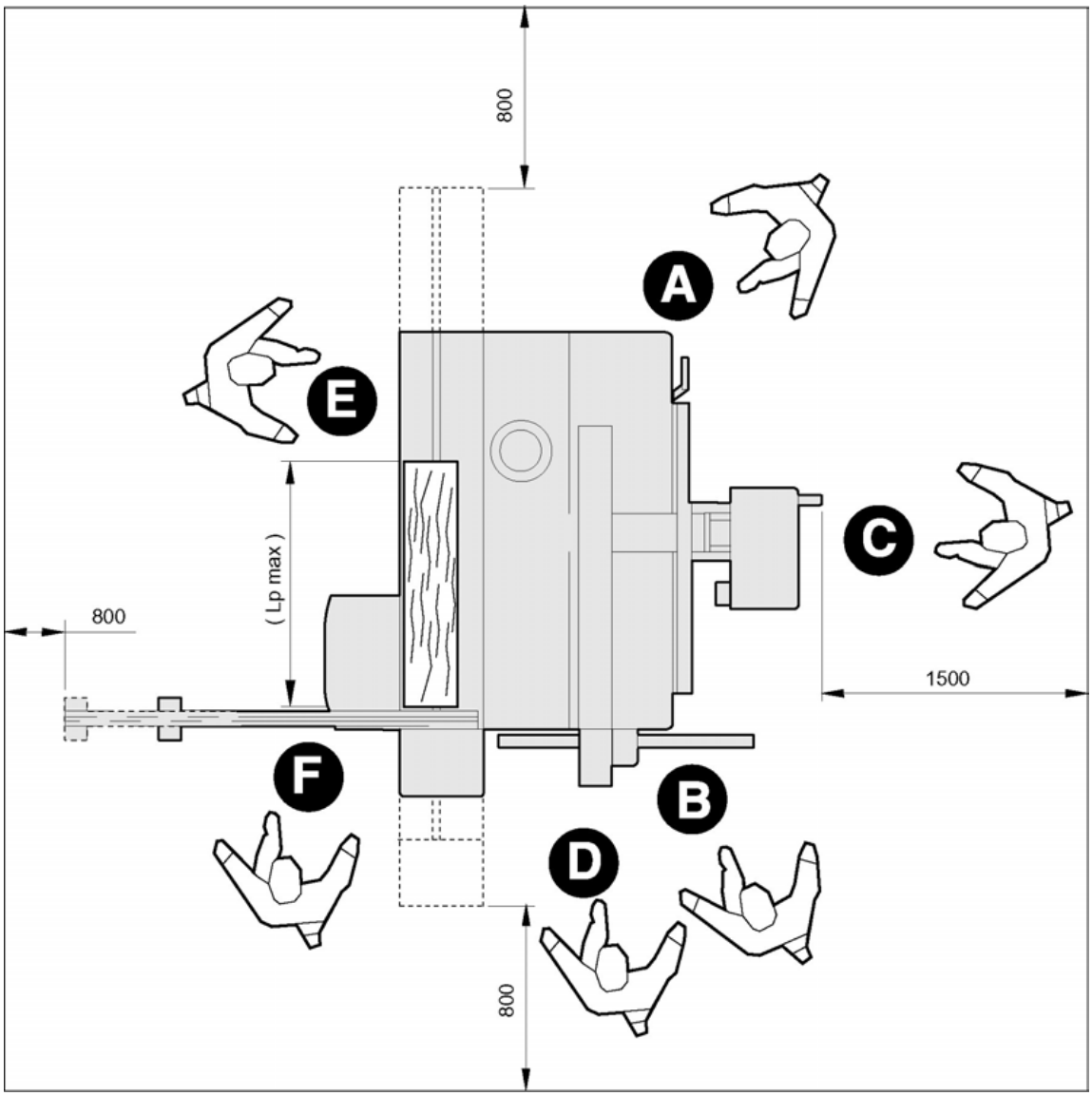

CAUTION:
the measures above indicated are to be considered as the free room of the working area.

DANGER-WARNING:
this machine has been designed to be used by one operator.

A = Surfacing planer ..... B = Thicknessing planer
C = Drilling ..... D = Parallel cutting
E = Moulder machining ..... F = Slide machining

Lp max = Max. workpiece length

THIS MANUAL IS PROPERTY OF SCM INDUSTRIA S.P.A - ANY TOTAL OR PARTIAL REPRODUCTION IS STRICTLY FORBIDDEN

INDEX

4.1 Unloading the machine 4

4.2 Machine positioning 6

4.3 Fitting the parts demounted for transport reasons 8

4.3.A Displacing wheels - Assembly 8

SAW / SAW - SPINDLE MOULDER 10

4.3.11 Table for sliding table - installation 10

4.3.12 Fitting the guard for saw blade and scorer 12

4.3.14 Fitting the additional tables 14

4.3.14.2 Fitting the additional table at exit side 14

4.3.24 Fitting the supporting frame 15

4.3.24.2 Fitting the rest rule 20

4.3.32 Plane and saw fence - Installation 22

4.3.40 Riving knife fitting 24

4.3.41 Fitting the saw blade 24

SURFACE PLANING AND THICKNESSING MACHINE 26

4.3.47 Bridge guard fitting 26

4.3.48 Planing fence - Assembly 27

SPINDLE MOULDER 28

4.3.52 Tenoning table and guard - Assembly 28

4.3.73 Fitting guards 29

4.3.73.1 Spindle moulder hood guide 29

4.3.73.4 Tenoning hood-fence unit 30

4.3.73.5 Guard for milling at the spindle 31

4.3.82 Tool fitting - SAFETY NOTES 33

4.3.82.1 Tool fitting 34

4.4 Electric connection and grounding 37

4.4.1 Requisites for the electricity supply system 37

4.4.2 Electric connection 40

4.4.3 Check the correct connection 40

4.5 Connection to the suction system 42

 THIS MANUAL IS PROPERTY OF SCM INDUSTRIA S.P.A - ANY TOTAL OR PARTIAL REPRODUCTION IS STRICTLY FORBIDDEN

(st 1)

4.1 UNLOADING THE MACHINE

(ev_4-1_0.0)

NOTE-INFORMATION:
the packing of the machine indicates:
- the weight to be raised
- the hooking areas

DANGER-WARNING:
lifting and handling should only be carried out by skilled personnel specially trained to execute this kind of operations. During loading and unloading, avoid knocks to prevent damages to persons or things. Make sure no one is standing under the overhung load and/or within the bridge crane working range during machine lifting and handling.

Before unloading the machine take off all parts rested on it for packing and transport reasons.

DANGER-WARNING:
- the machine shall be lifted by crane or other raising means by hooking the slings as shown in fig. 4.1.
- Make sure that the crane, the slings as well as the fork truck are proper for lifting the machine.

If a bridge crane or a crane is available, proceed as follows:
– provide slings (C fig. 4.1) of equal lengths and capacity (belts minimum length 2000 mm);
– lift the slings and position them as is shown in the figure 4.1;
– fasten the slings to the bridge crane (D fig. 4.1) having adequate lifting power;
– move the bridge crane by small steps to allow the slings (C fig. 4.1) to settle, until optimum stability conditions are reached;
– lift carefully and slowly, without causing the load to swing, and place the machine in the selected setting.

If hoisting is carried out with a lift truck A, proceed as follows:
– provide a fork lift truck (A fig. 4.1) having suitable carrying capacity;
– insert the forks (B fig. 4.1) as per the figure (keeping them alongside the two feet (E fig. 4.1) and check that these protrude at least 15 cm from the rear part of the base.

THIS MANUAL IS PROPERTY OF SCM INDUSTRIA S.P.A - ANY TOTAL OR PARTIAL REPRODUCTION IS STRICTLY FORBIDDEN

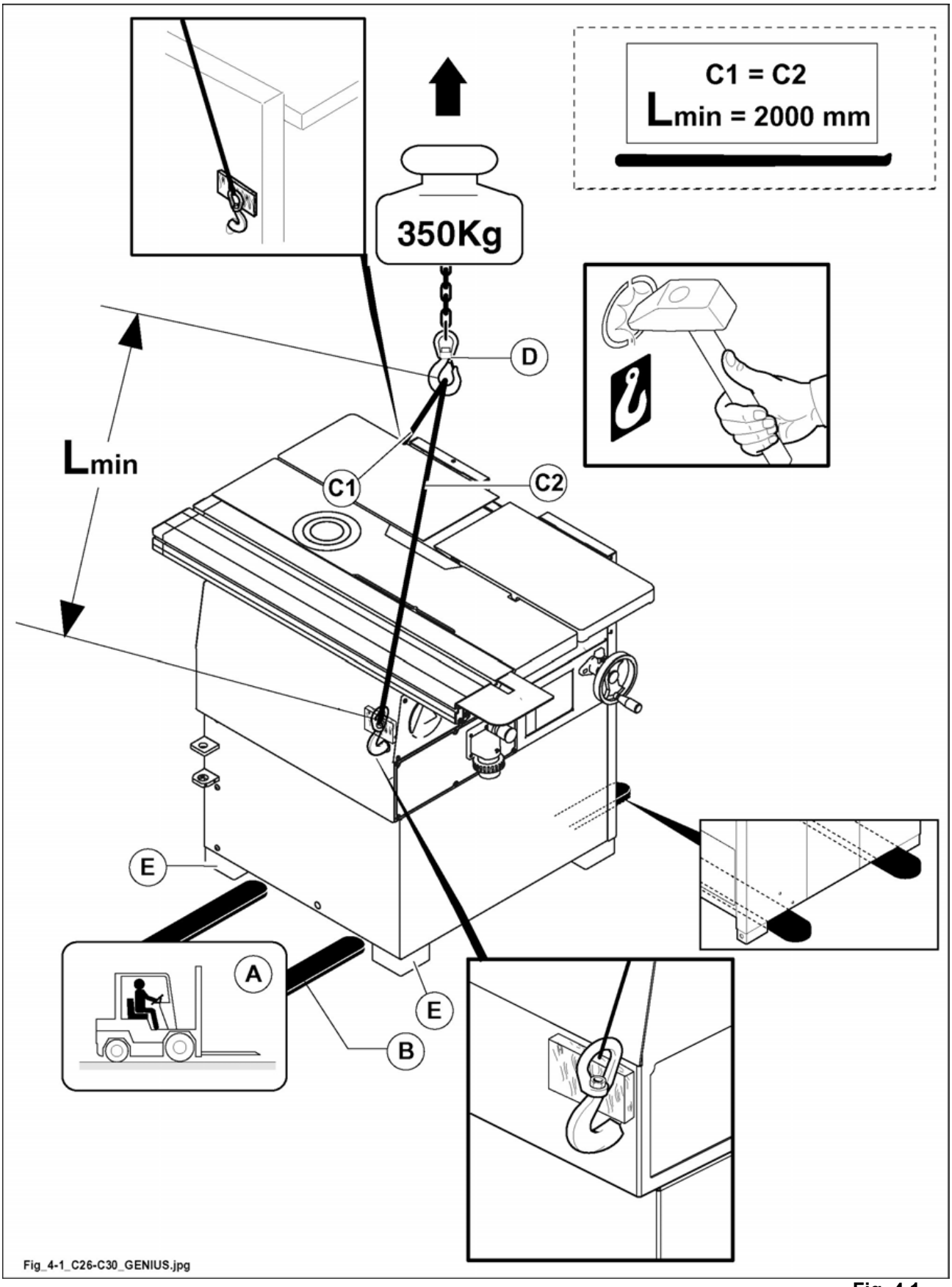
C1 = C2
Lmin = 2000 mm
350Kg
D
Lmin
C1
C2
E
A
B
E
Fig_4-1_C26-C30_GENIUS.jpg

Fig. 4.1

4.2 MACHINE POSITIONING

(ev_4-2_0.0)

The position where to install the machine shall be well lightened (at least 500 LUX), proper for the connection to the power line, to the suction system and for maintenance operations.

DANGER-WARNING:
during the machine positioning you have to consider that, in case of longer pieces, a sufficient room is required to avoid squashing points towards the fixed parts of the working envinronment as walls, columns etc... (see par. 3.7).

Check that the floor is firm in order to ensure a uniform rest of the machine.
A concrete floor is recommended; an asphalt floor is not proper.
We recommend to insert steel plates between machine feet and floor eventually with vibration-dumping material.

DANGER-WARNING:
the machine must be fixed to the floor.
Fix the supplied angles B (fig. 4.2) to machine feet A (fig. 4.2) and fix on ground by means of expansion bolts C (fig. 4.2) (not supplied).

Some machine parts are greased and oiled.
Before starting working carefully degrease the working areas as well as the guards with not dangerous solvent.

THIS MANUAL IS PROPERTY OF SCM INDUSTRIA S.P.A - ANY TOTAL OR PARTIAL REPRODUCTION IS STRICTLY FORBIDDEN

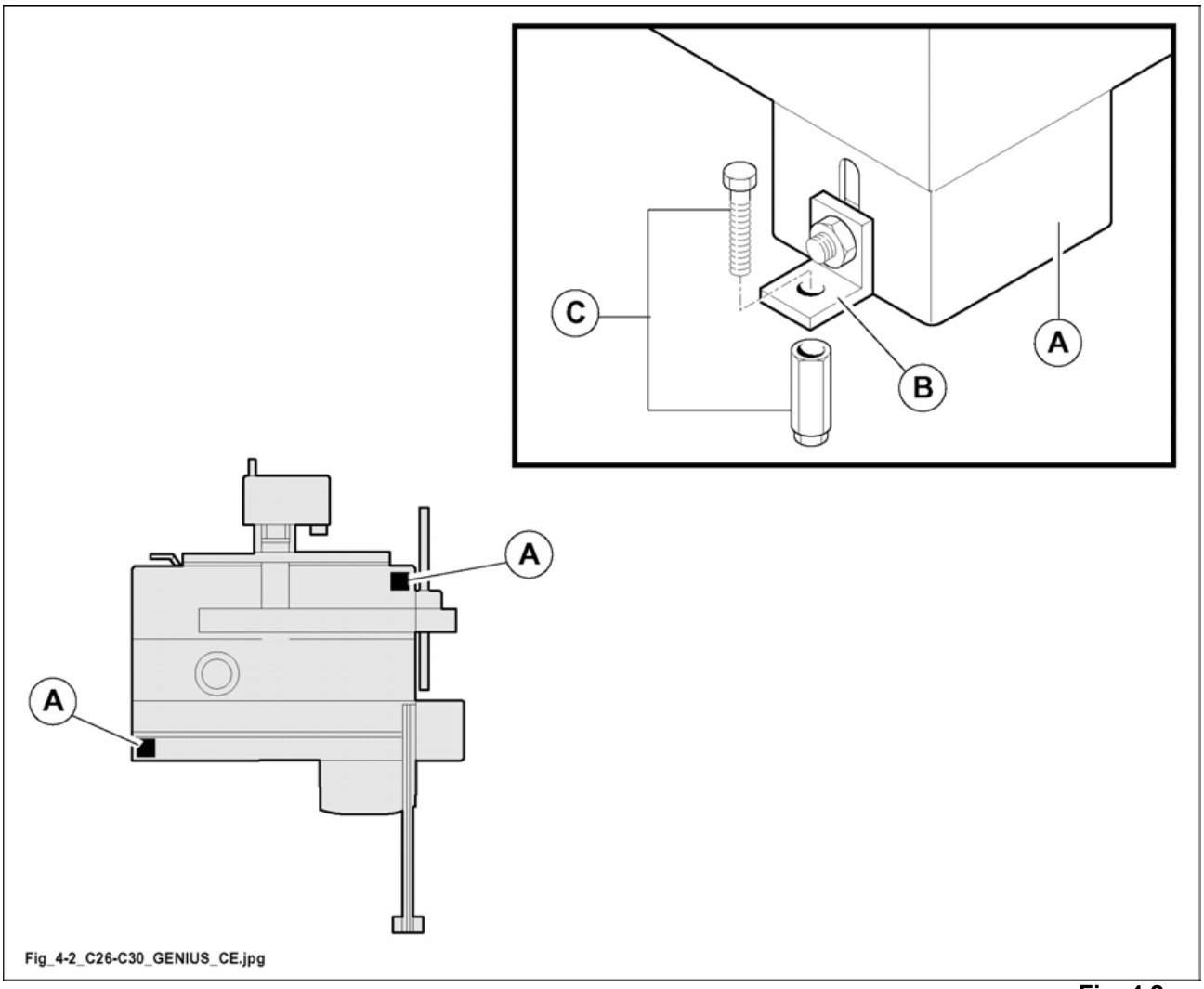

Fig. 4.2

4.3 FITTING THE PARTS DEMOUNTED FOR TRANSPORT REASONS

(ev_4-3_0.0)

For packing and transport reasons some machine members are removed.

DANGER-WARNING:
remove the screw (A fig. 3) fastening the surface tables during transport operations.

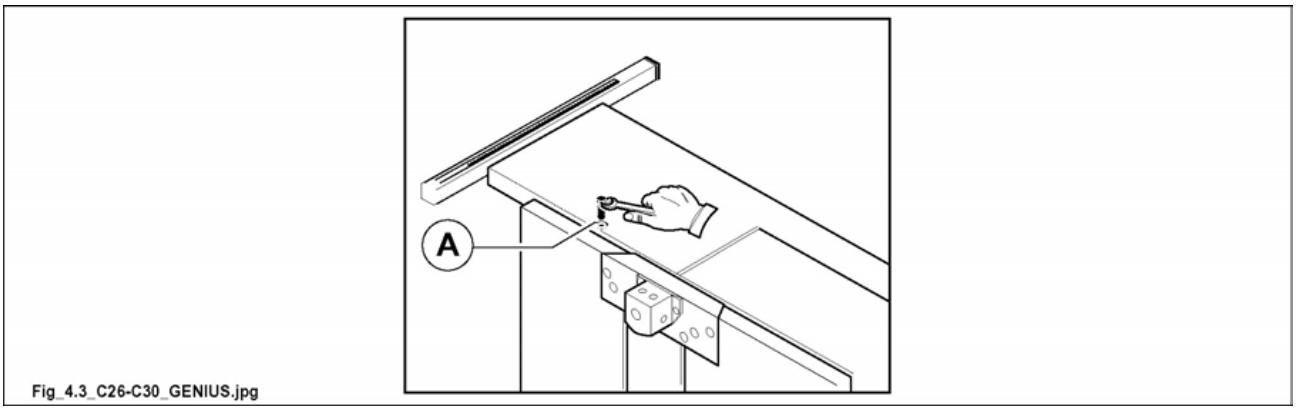

Fig. 4.3

4.3.A DISPLACING WHEELS - ASSEMBLY

(cu_4-3-a_0.0)

OPT

The unit is composed by:
- 2 fixed wheels (A fig. 4.3-A).
- 1 movement lever (B fig. 4.3-A).

1) Use lever (B fig. 4.3-A) to lift machine base slightly;
2) engage head of screw on fixed wheel (A fig. 4.3-A) in base feet hole as indicated in the figure;
3) move lever (B fig. 4.3-A) from opposite side of machine, insert lever in relative attachment (it is indicated with the arrow F) and move the machine.

DANGER-WARNING:
at the end of the operation, disassemble the moving wheels (A fig. 4.3-A) and fix the machine to the ground (see Par. 4.2);
the machine must be fixed to the floor.

THIS MANUAL IS PROPERTY OF SCM INDUSTRIA S.P.A - ANY TOTAL OR PARTIAL REPRODUCTION IS STRICTLY FORBIDDEN

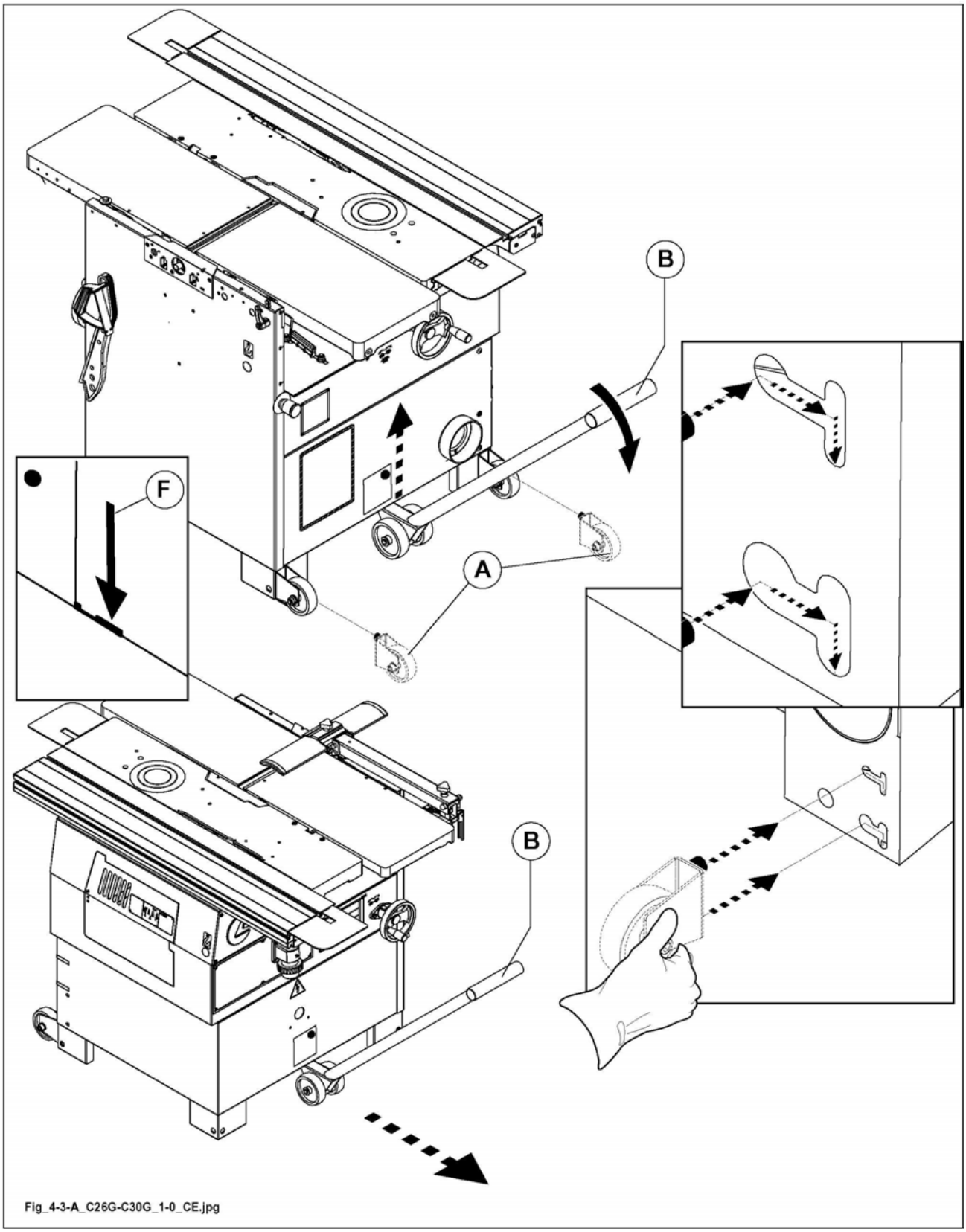

Fig. 4.3-A

SAW / SAW - SPINDLE MOULDER

(titolo_sega)

4.3.11 TABLE FOR SLIDING TABLE - INSTALLATION

(mmax_4-3-11_0.0)

1) Unscrew the two screws (A fig. 4.3-11), the screw (B fig. 4.3-11) and the lock nut (C fig. 4.3-11).
2) Position the table as illustrated, refit the screws (A fig. 4.3-11), (B fig. 4.3-11) and tighten the lock nut (C fig. 4.3-11).

Make sure that between the head of the screw (B fig. 4.3-11) and the lock nut (C fig. 4.3-11) you leave enough space to guarantee correct lever (D fig. 4.3-11) closing.

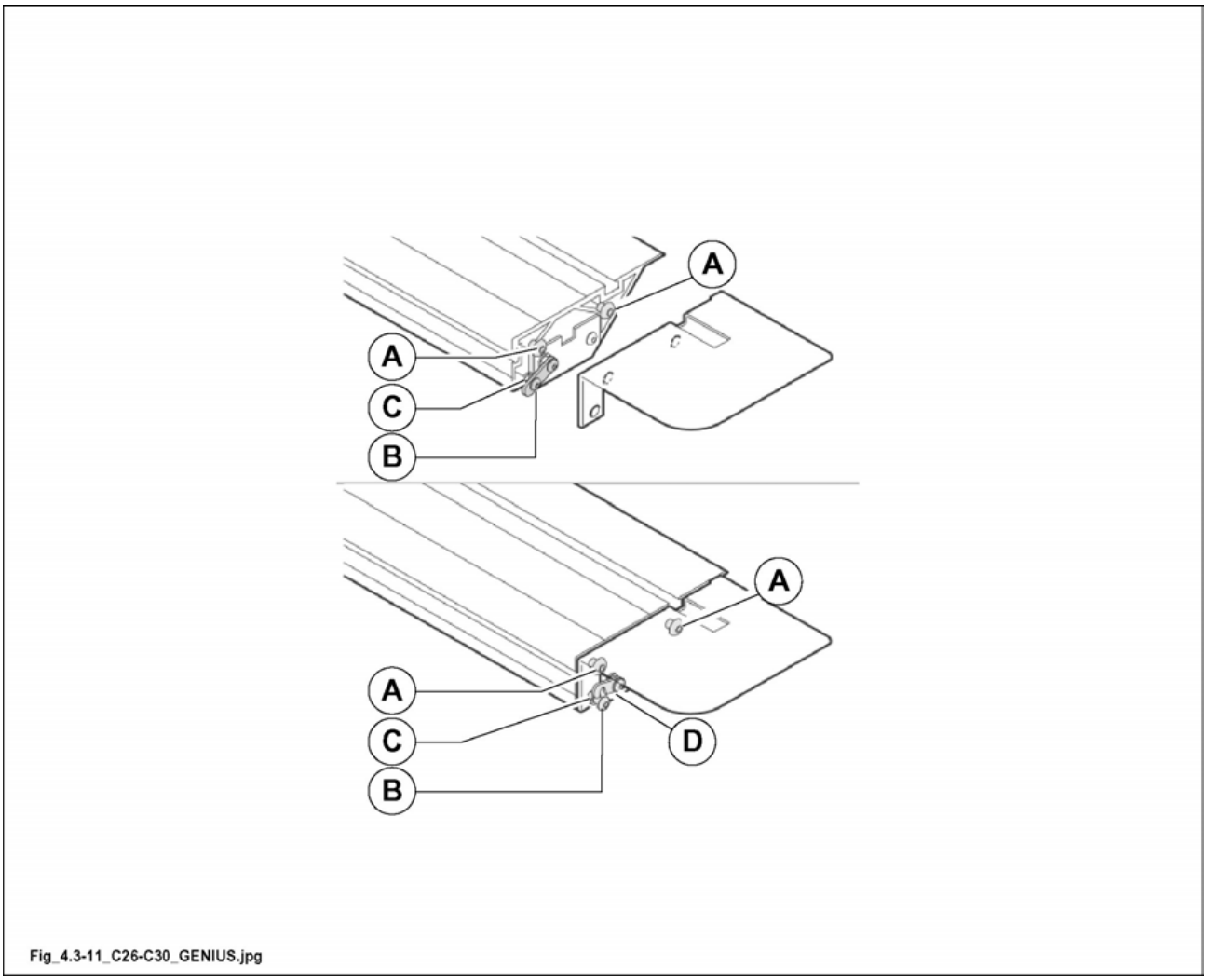

Fig. 4.3-11

 THIS MANUAL IS PROPERTY OF SCM INDUSTRIA S.P.A - ANY TOTAL OR PARTIAL REPRODUCTION IS STRICTLY FORBIDDEN

(vuota_4-0)

4.3.12 FITTING THE GUARD FOR SAW BLADE AND SCORER

(hg_4.3.12)

Lift the saw assembly by means of the lever (A fig. 4.3-12) after loosening the handle (B fig. 4.3-12).
Saw blade guard (A fig. 4.3-12) is fastened to the riving knife with handle (E).

DANGER-WARNING:
never remove this guard: it shall be fitted in order to cover the saw blade as much as possible.

DANGER-WARNING:
adjust the position of the riving knife (see Par. 6.1) so that its distance from the saw blade is between 3 and 8 mm (see example in fig. 4.3-12).
The dividing knife is in the right position when the saw guard covers a part of the cutting edge of the saw blade.

Connect the exhaust pipe (H fig. 4.3-12) to the suction system with hoses of proper diameter.

With this protective hood, it's strictly forbidden to carry out not-through cuts.

THIS MANUAL IS PROPERTY OF SCM INDUSTRIA S.P.A - ANY TOTAL OR PARTIAL REPRODUCTION IS STRICTLY FORBIDDEN

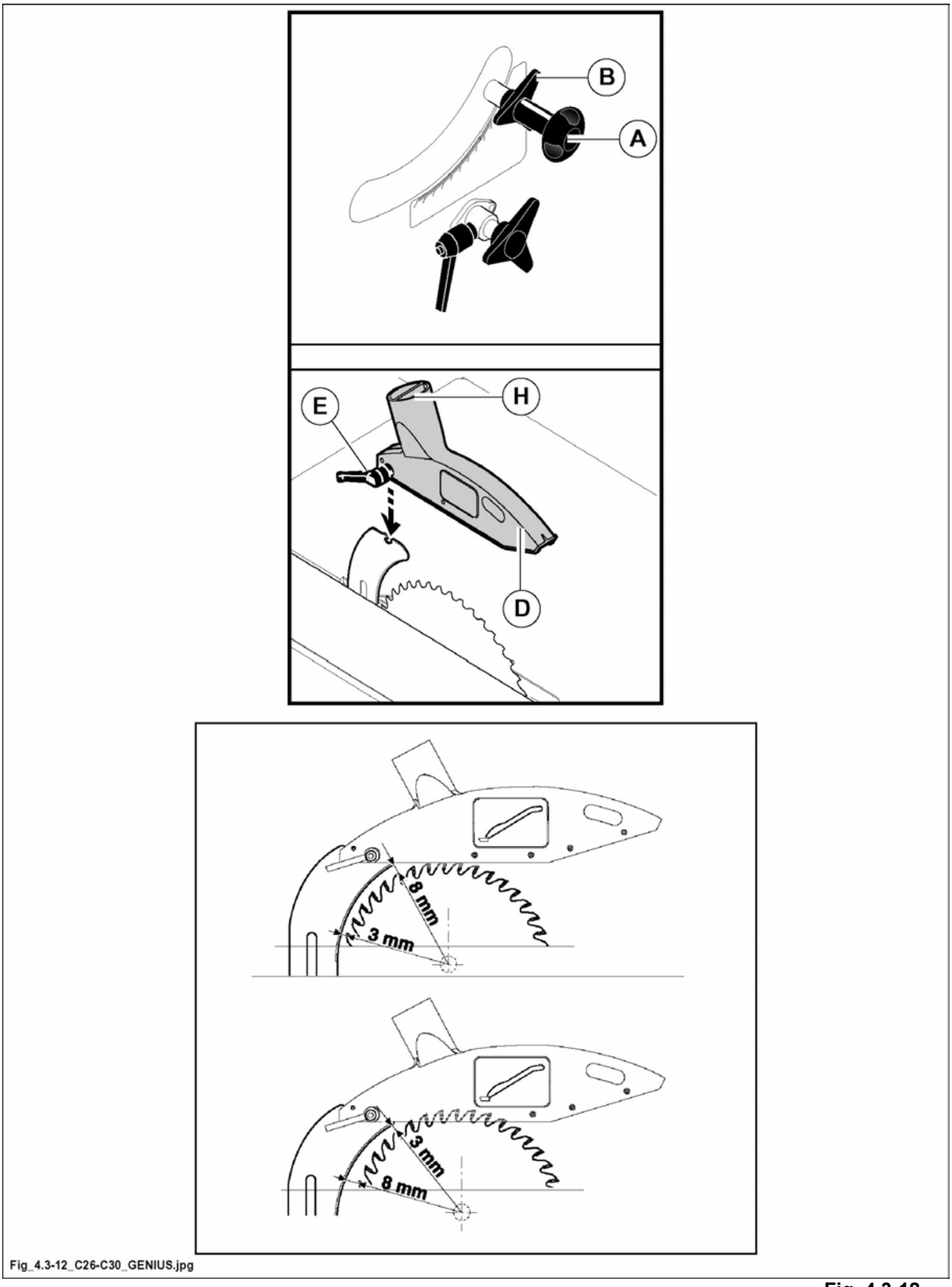

Fig. 4.3-12

4.3.14 FITTING THE ADDITIONAL TABLES

(ev_4-3-14_0.0)

4.3.14.2 FITTING THE ADDITIONAL TABLE AT EXIT SIDE

(ev_4-3-14-2_0.0)

Fix additional table (A fig. 4.3-14-2) to table (B fig. 4.3-14-2) with screws (C fig. 4.3-14-2) and align the additional table to the table (B fig. 4.3-14-2) (check the alignement with a proper rule).

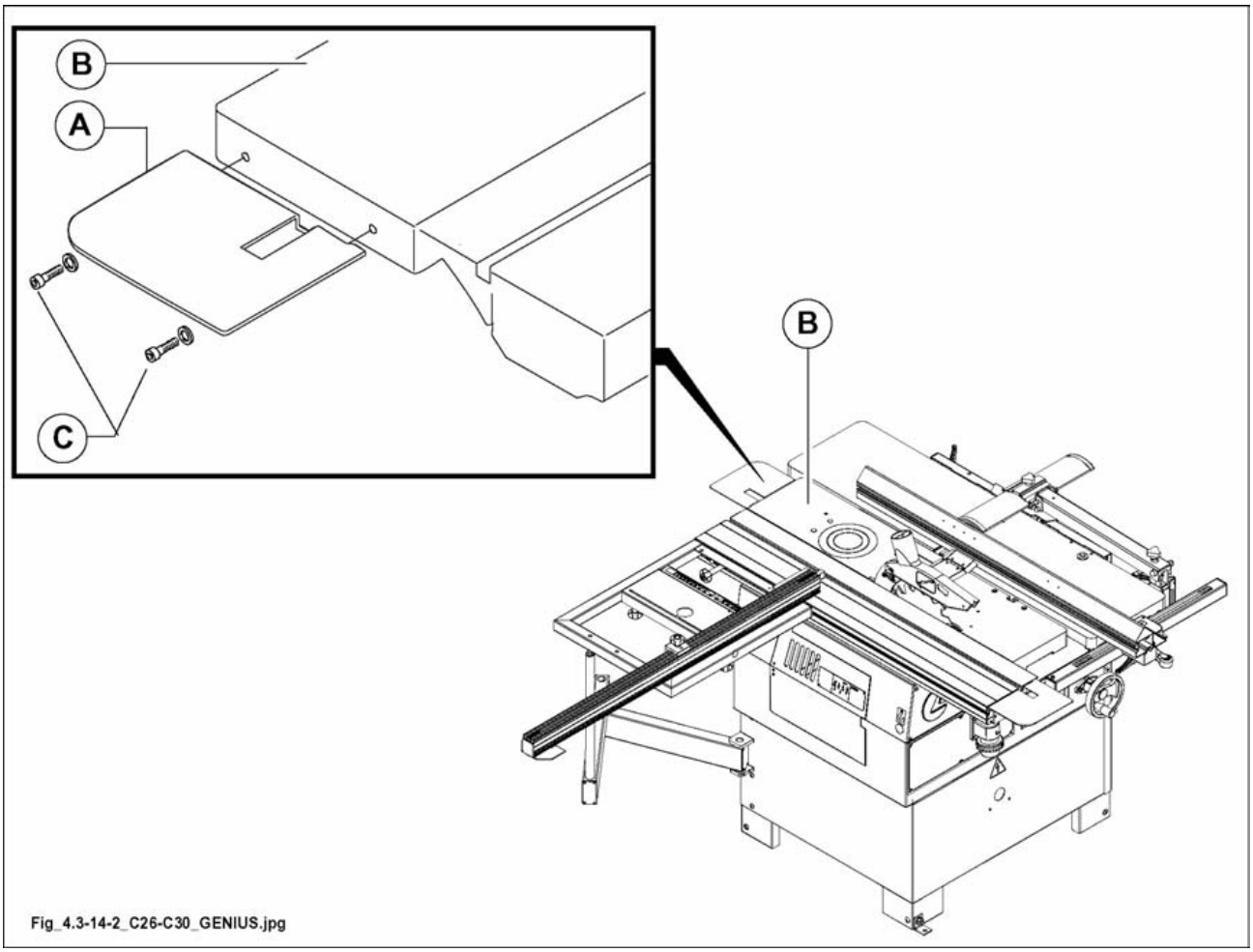

Fig. 4.3-14-2

 THIS MANUAL IS PROPERTY OF SCM INDUSTRIA S.P.A - ANY TOTAL OR PARTIAL REPRODUCTION IS STRICTLY FORBIDDEN

4.3.24 FITTING THE SUPPORTING FRAME

(hd_4.3-24_0.0)

NOTE-INFORMATION:
for transport reasons the frame is demounted from the machine.

Squaring table

1) Mount the attachment (A fig. 4.3-24/1) inserting the gib (B fig. 4.3-24/1) in the groove of the wagon (C fig. 4.3-24/1).
2) Tighten the lever (G fig. 4.3-24/1).
3) Insert the stud bolt (L fig. 4.3-24) with the presser (M fig. 4.3-24) in the groove of the wagon (C fig. 4.3-24) and turn it clockwise to lock it.

The table has already been adjusted; to adjust proceed as follows:
- loosen levers (G fig. 4.3-24/1);
- adjust the dowels (S fig. 4.3-24/1) to ensure the table is parallel to the wagon;
- loosen screws (T fig. 4.3-24/1) and move the dowels (U fig. 4.3-24/1) to adjust the height position.

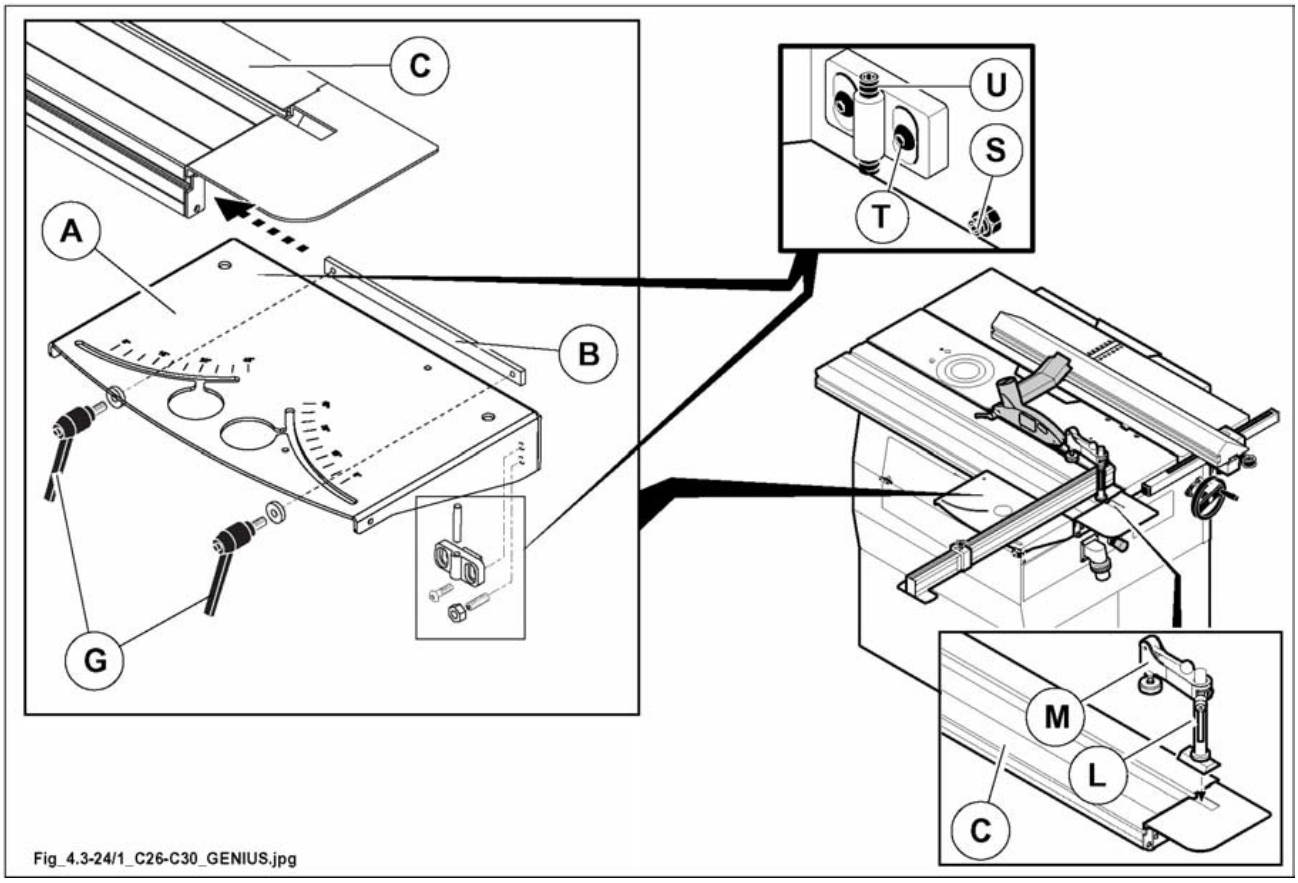

Fig. 4.3-24/1

Supporting frame OPT

1) Insert the support (B fig. 4.3-24) in the groove of the wagon (A fig. 4.3-24).
2) Position the swinging support (G fig. 4.3-24) as shown in the figure; rest the frame (D fig. 4.3-24) on the support (B fig. 4.3-24), inserting the two pads (H fig. 4.3-24) in the groove of the wagon, and the screw (F fig. 4.3-24) in the hole (E fig. 4.3-24).

NOTE-INFORMATION:
the screw (F fig. 4.3-24) must sit perfectly in the special hole underneath the frame (D fig. 4.3-24).

3) Level the table (D fig. 4.3-24), if necessary, turning the screw (F fig. 4.3-24).
4) Tighten the knobs (C fig. 4.3-24).
5) Insert the stud bolt (L fig. 4.3-24) with the presser (M fig. 4.3-24) in the groove of the wagon (A fig. 4.3-24) and turn it clockwise to lock it.

The table is already registered; to make further adjustments proceed as follows:
- loosen knobs (C fig. 4.3.24);
- loosen screws (P fig. 4.3.24) and move the dowels (Q fig. 4.3.24) to adjust the height position.

If the "Supporting frame" device is required at a later stage, the operations described above must be preceded by assembly of the telescopic extension arm unit.

- Open the door (N fig. 4.3-24).
- Open the pre-prepared holes (W fig. 4.3-24).
- Fix the swing-arm support (Y fig. 4.3-24) on the base; fix it with the screws (V fig. 4.3-24).
- Mount the swing arm (R fig. 4.3-24) on the support (Y fig. 4.3-24) and on the spacer (T fig. 4.3-24) and insert the rotation pin (S fig. 4.3-24).
- Act on the grub screws (O fig. 4.3-24) to carry out initial adjustment of the swing arm (R fig. 4.3-24).
- Then proceed with assembly of the support frame (D fig. 4.3-24) as illustrated in the above-described sequence (1 - 5).
- Move the wagon and check for proper sliding and planarity of the swing arm unit.
  Should it be necessary to adjust the position of the swing arm (R fig. 4.3-24), act on the pin (S fig. 4.3-24) via the grub screws (O fig. 4.3-24).
- Level the table (D fig. 4.3-24), where necessary, by acting on the screw (F fig. 4.3-24).
- Loosen knobs (C fig. 4.3.24);
  loosen screws (P fig. 4.3.24) and move the dowels (Q fig. 4.3.24) to adjust the height position.
- When the operation is complete, tighten the screws (P fig. 4.3-24) and tighten the knobs (C fig. 4.3-24).
- Finally, mount the ball grub screw (J fig. 4.3-24), securing it by way of the nut (K fig. 4.3-24).
  The purpose of the device, once correctly fitted, is to keep the swing arm, when it has no frame, joined to the machine base so as not to obstruct the operator during machining.

THIS MANUAL IS PROPERTY OF SCM INDUSTRIA S.P.A - ANY TOTAL OR PARTIAL REPRODUCTION IS STRICTLY FORBIDDEN

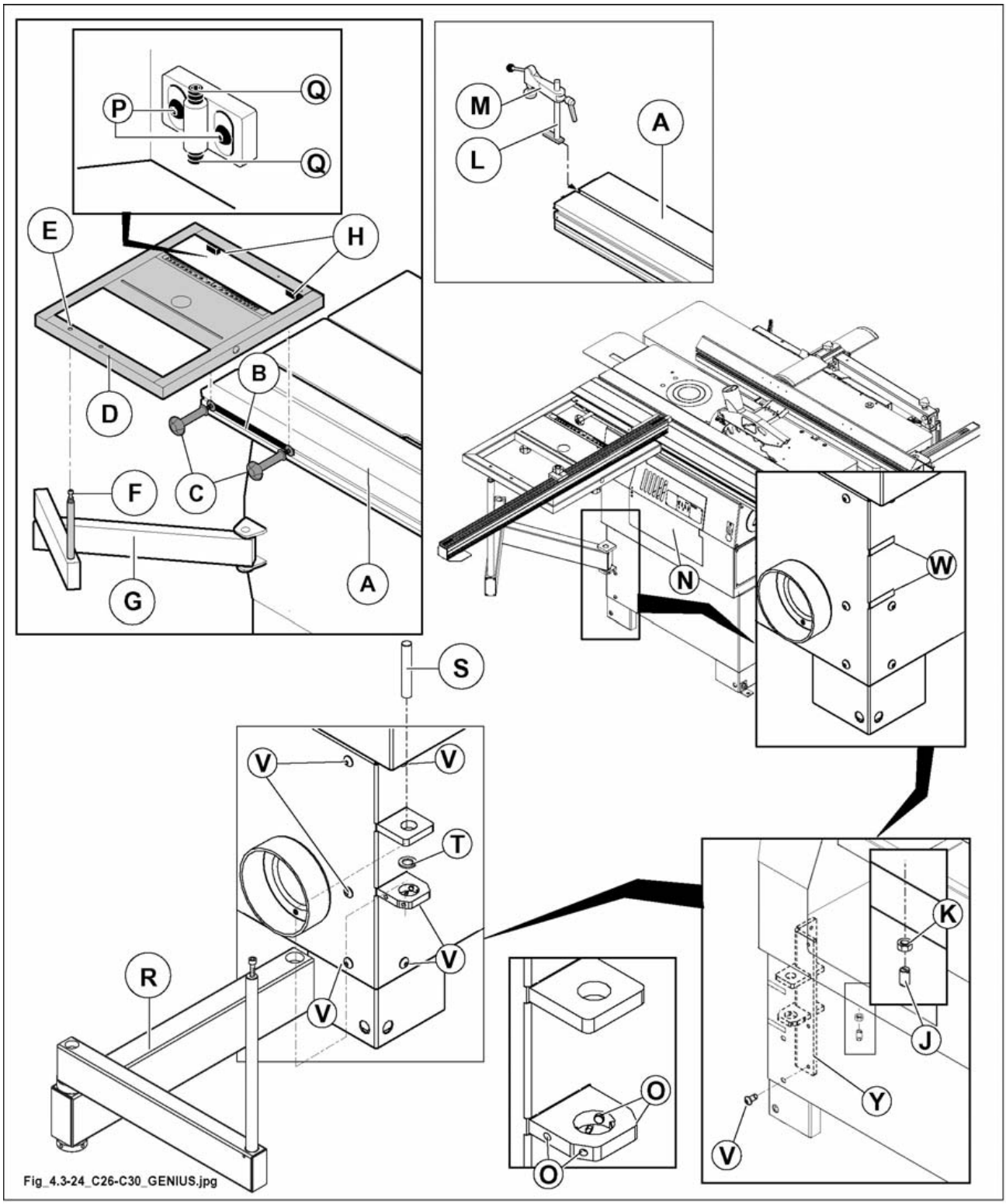
P
Q
Q
E
H
D
B
F
C
G
A
M
L
A
N
W
S
V
V
T
V
V
R
O
O
K
J
Y
V
Fig_4.3-24_C26-C30_GENIUS.jpg

Fig. 4.3-24

Finally, fit the graduated labels (A, B fig. 4.3-24A) as described below.

- Install the rule fence (R fig. 4.3-24A), for right angle cuts (0°), on side "1" of the supporting frame (see Sec. 4.3.24.2).
  If the rule does not position correctly at 90°, remove the cap (T fig. 4.3-24A) and turn the adjusting screw (V fig. 4.3-24A) until the rule is positioned correctly at 90°.
- Mark, for example with a pencil, the position of the rule fence (C fig. 4.3-24A).

- Position the rule fence (R fig. 4.3-24A), for 45° mitre cuts, again on side "1" of the supporting frame (see Sec. 4.3.24.2).
- Mark, for example with a pencil, the position of the rule fence (D fig. 4.3-24A).

- Then take the adhesive label (A fig. 4.3-24A),
  position it on the frame as illustrated,
  align its 0° and 45° marks with the two positions (C, D fig. 4.3-24A) previously marked on the frame, then attach the label to the frame.

After positioning the rule fence on side "2" of the supporting frame, repeat the operations listed above to fit the graduated label (B fig. 4.3-24A).

 THIS MANUAL IS PROPERTY OF SCM INDUSTRIA S.P.A - ANY TOTAL OR PARTIAL REPRODUCTION IS STRICTLY FORBIDDEN

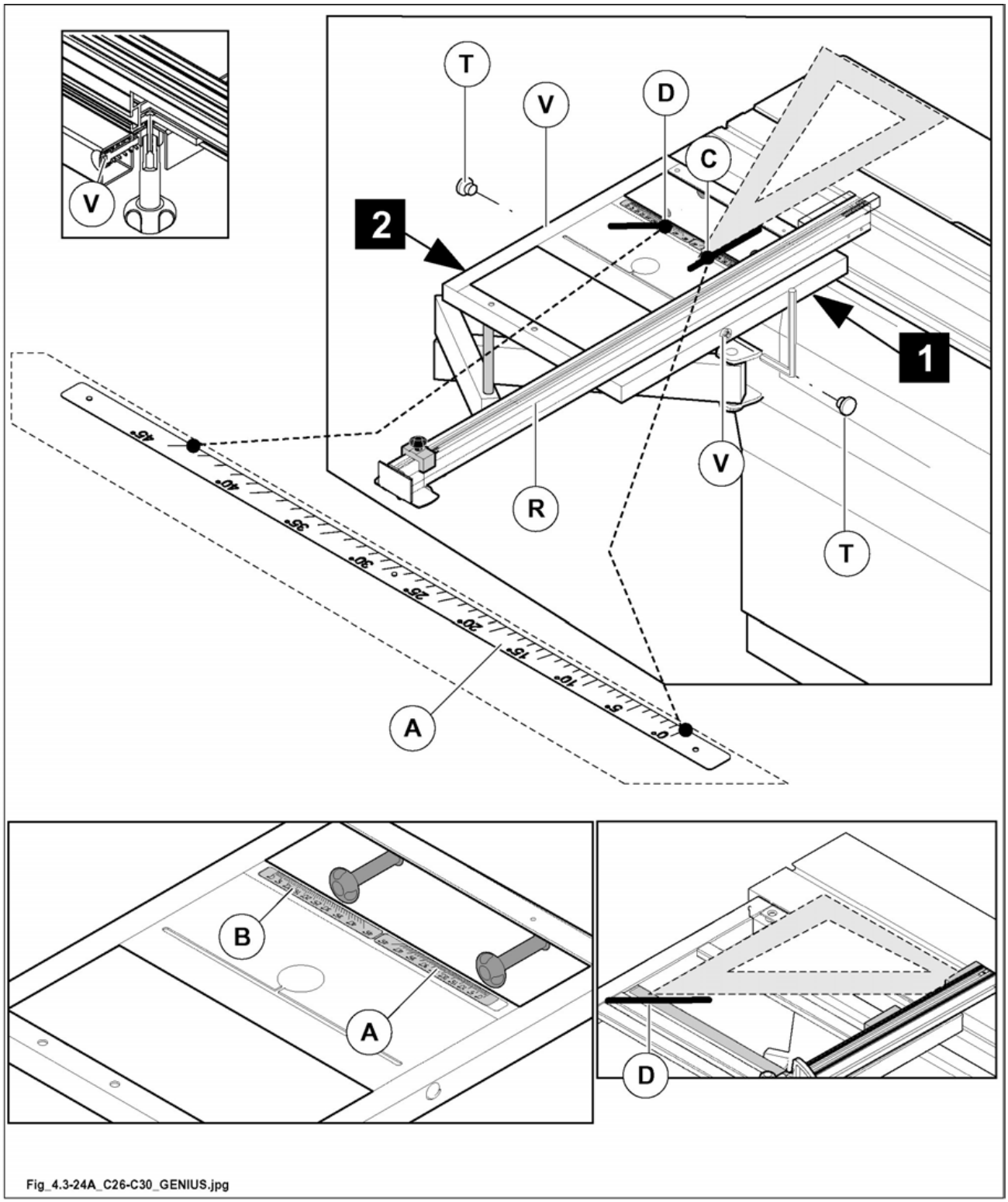

Fig. 4.3-24A

4.3.24.2 FITTING THE REST RULE

(hd_4.3.24.2_0.0)

Squaring table

1) Place the ruler on the table (A fig. 4.3-24-2A), inserting the fulcrum (C fig. 4.3-24-2A) in the hole (R fig. 4.3-24-2A).
   Insert the knob (F fig. 4.3-24-2A) in the slot (T fig. 4.3-24-2A) by means of the hole (D fig. 4.3-24-2A).
   Insert the lock pin (P fig. 4.3-24-2A) in the slot on the wagon (E fig. 4.3-24-2A) only for versions.
2) Position the rule at required angle using slot (T fig. 4.3-24-2A) and tighten knob (F fig. 4.3-24-2A).

   When the chip guard (M fig. 4.3-24-2A) is worn, bring it up to the saw blade by loosening the two screws (N fig. 4.3-24-2A).

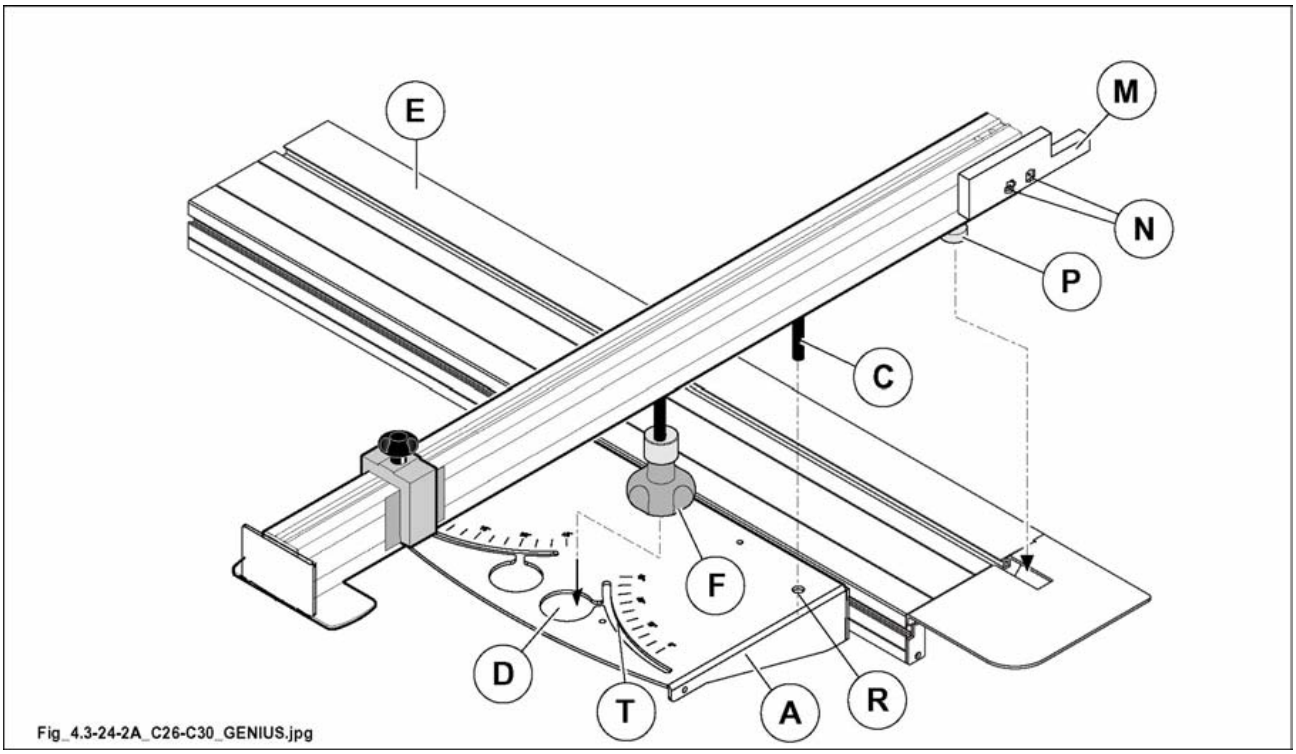

Fig. 4.3-24-2A

THIS MANUAL IS PROPERTY OF SCM INDUSTRIA S.P.A - ANY TOTAL OR PARTIAL REPRODUCTION IS STRICTLY FORBIDDEN

Supporting frame OPT

A *Installation for 90° cuts*

1) Place the ruler on the table (A fig. 4.3-24-2), inserting the fulcrum (C fig. 4.3-24-2) in the hole (R fig. 4.3-24-2).
   Insert the knob (F fig. 4.3-24-2) in the slot (T fig. 4.3-24-2) by means of the hole (D fig. 4.3-24-2).
2) Position the ruler in such a way that the pin (C fig. 4.3-24-2) fits into place against the gib (L fig. 4.3-24-2). The gib (L fig. 4.3-24-2) is adjusted by our technicians and is used to rapidly position the ruler at the right distance from the saw blade (only at a 90° position).
3) Position the ruler in such a way that the pin (E fig. 4.3-24-2) fits into place against the device (S fig. 4.3-24-2).
4) Tighten the knob (F fig. 4.3-24-2).

B *Installation for inclined cuts*

1) Place the ruler on the table (A fig. 4.3-24-2), inserting the fulcrum (C fig. 4.3-24-2) in the hole (R fig. 4.3-24-2).
   Insert the knob (F fig. 4.3-24-2) in the slot (T fig. 4.3-24-2) by means of the hole (D fig. 4.3-24-2).
2) For use, position the ruler referring to the plate (P fig. 4.3-24-2).
3) Tighten the knob (F fig. 4.3-24-2).

When the chip guard (M fig. 4.3-24-2) is worn, bring it up to the saw blade by loosening the two screws (N fig. 4.3-24-2).

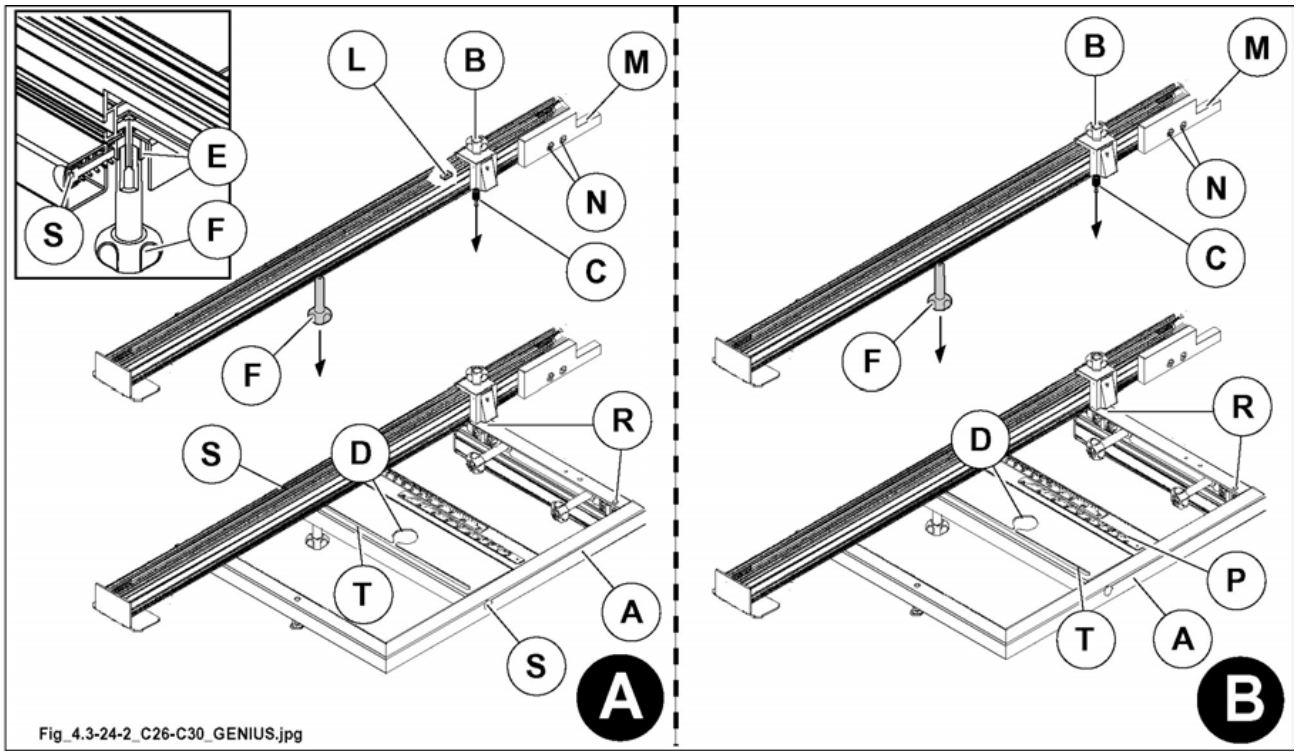

Fig. 4.3-24-2

4.3.32 PLANE AND SAW FENCE - INSTALLATION

(mmax_4.3.32_0.0)

1) Fit slider (B fig.4.3-32) and tighten lever (A fig.4.3-32).
2) Position the support (C fig. 4.3-32) on the slider (B fig.4.3-32) and tighten lever (D fig.4.3-32).
3) Fit the fence (E fig.4.3-32) inserting the wedge (F fig.4.3-32) in slot (G fig.4.3-32) and tighten knob (H fig.4.3-32).

DANGER-WARNING:
planing positions;
always make sure that the plastic spacer (M fig. 4.3-32) is positioned as shown in the figure; this is to prevent interference between the guide (E fig. 4.3-32) and the planer spindle.

CAUTION:
lifting and handling the guide should only be carried out by personnel specially trained to execute this kind of operations, to prevent accidents or to prevent guide from being damaged.

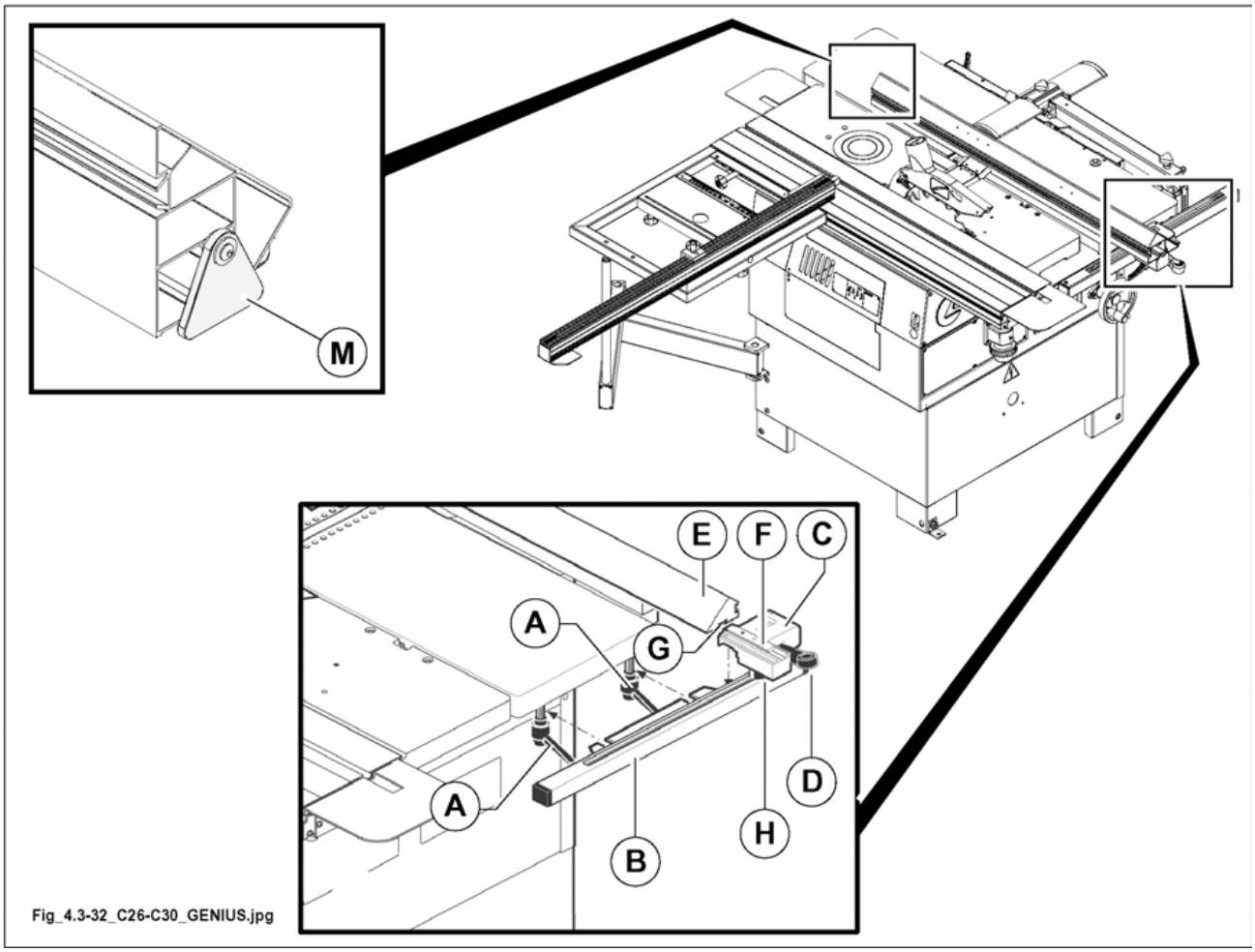

Fig. 4.3-32

THIS MANUAL IS PROPERTY OF SCM INDUSTRIA S.P.A - ANY TOTAL OR PARTIAL REPRODUCTION IS STRICTLY FORBIDDEN

(vuota_4-00)

4.3.40 RIVING KNIFE FITTING

(hg_4.3.40_0.0)

NOTE-INFORMATION:
see Chapter 6.

4.3.41 FITTING THE SAW BLADE

(he-4.3.41_0.0)

DANGER-WARNING:
use proper gloves for handling the tools.

DANGER-WARNING:
before carrying out any of the operations make sure to cut the main electric power and disconnect socket T from plug S.

DANGER-WARNING:
WAIT UNTIL THE SAW BLADES ARE STILL.

NOTE-INFORMATION:
this operation must be performed using access door (N fig. 4.3-41).

For fitting or replacing the saw blade proceed as follows:
1) Position the saw unit at 90° and lower it as far as it will go.
2) Open the door (N fig.4.3-41).
4) Fit pin (B fig.4.3-41) into the saw shaft pulley hole.

NOTE-INFORMATION:
a limit switch ensures that with guard (N fig. 4.3-41) open the motor can not be started.

NOTE-INFORMATION:
the locking nut (C fig. 4.3-41) of the saw blade is counter-clockwise; to unscrew it turn it clockwise.

5) Loosen the lock nut (C fig. 4.3-41) using a 24 mm hex wrench and remove flange (D fig. 4.3-41).
6) In sequence mount the saw (E fig. 4.3-41), the flange (D fig. 4.3-41) and the nut (C fig. 4.3-41) (to prevent any vibration, thoroughly clean the flanges before mounting the saw blade).
   To make is easier to insert the saw (E fig. 4.3-41), you must widen the chip conveyor slightly and allow the saw to pass through the space created in correspondence to arrow (H fig. 4.3-41).
7) Tighten the nut using the 24 mm wrench and the pin (B fig. 4.3-41).
8) Adjust dividing knife (F fig. 4.3-41) height by unloosing nut (G fig. 4.3-41).

THIS MANUAL IS PROPERTY OF SCM INDUSTRIA S.P.A - ANY TOTAL OR PARTIAL REPRODUCTION IS STRICTLY FORBIDDEN

DANGER-WARNING:
for safety reasons you must close guard (N fig. 4.3-41), otherwise:
- the machine does not start.

Adjust the position of the riving knife so that its distance from the saw blade is between 3 and 8 mm.
The dividing knife is in the right position when the saw guard covers a part of the cutting edge of the saw blade.

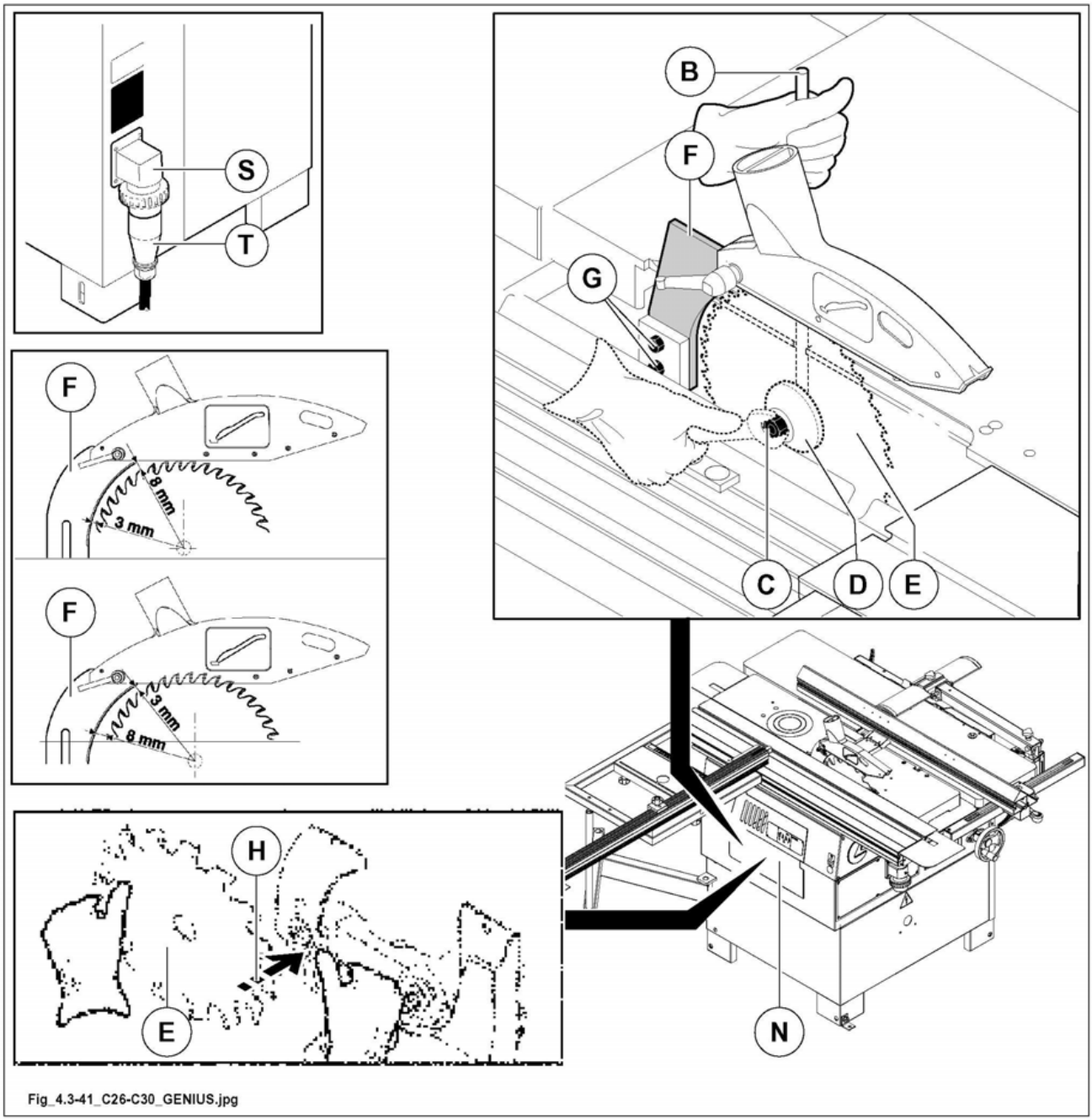

Fig. 4.3-41

SURFACE PLANING AND THICKNESSING MACHINE

(titolo_fs)

4.3.47 BRIDGE GUARD FITTING

(cu_4-3-47_0.0)

NOTE-INFORMATION:
the protections must always be mounted and be positioned in such as way as to completely cover the tools.

For transport reasons bridge (A fig. 4.3-47) is demounted.

For fitting the bridge again:
1) fit the protection (A fig. 4.3-47) into place as shown in the picture.
2) Screw the 2 retaining screws through the holes (B fig. 4.3-47).

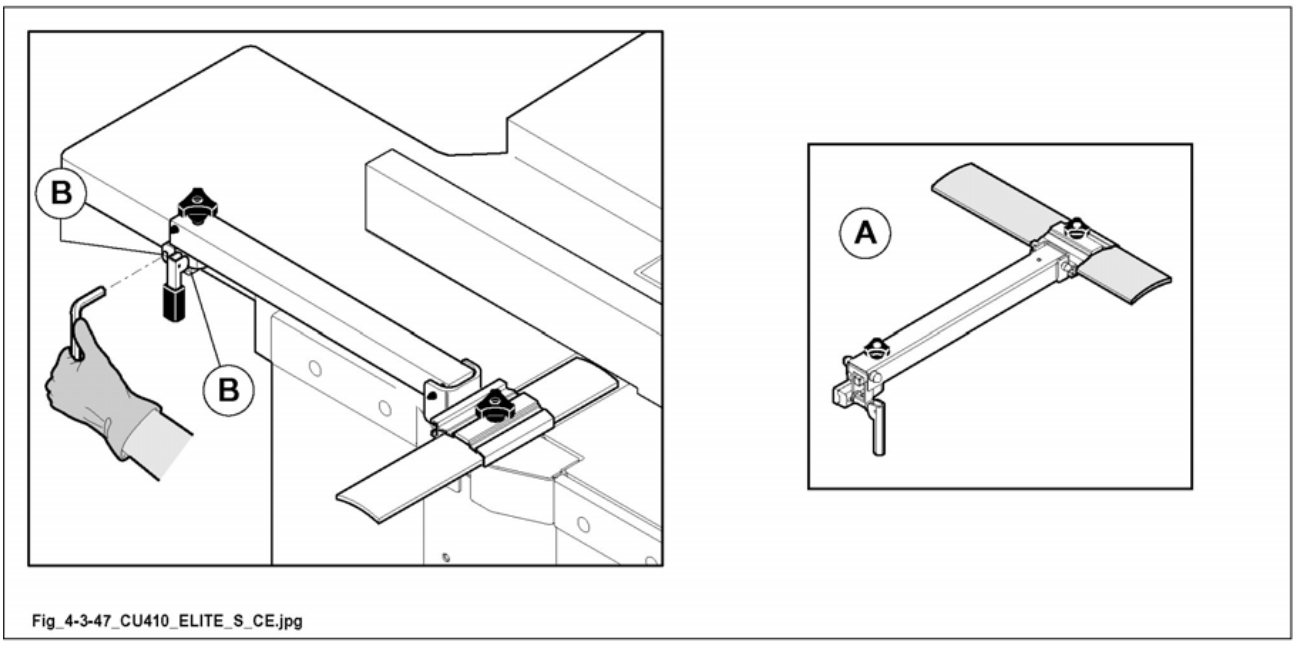

Fig. 4.3-47

THIS MANUAL IS PROPERTY OF SCM INDUSTRIA S.P.A - ANY TOTAL OR PARTIAL REPRODUCTION IS STRICTLY FORBIDDEN

4.3.48 PLANING FENCE - ASSEMBLY

(cu-4-3-48-0.0)

See Par. 4.3.32

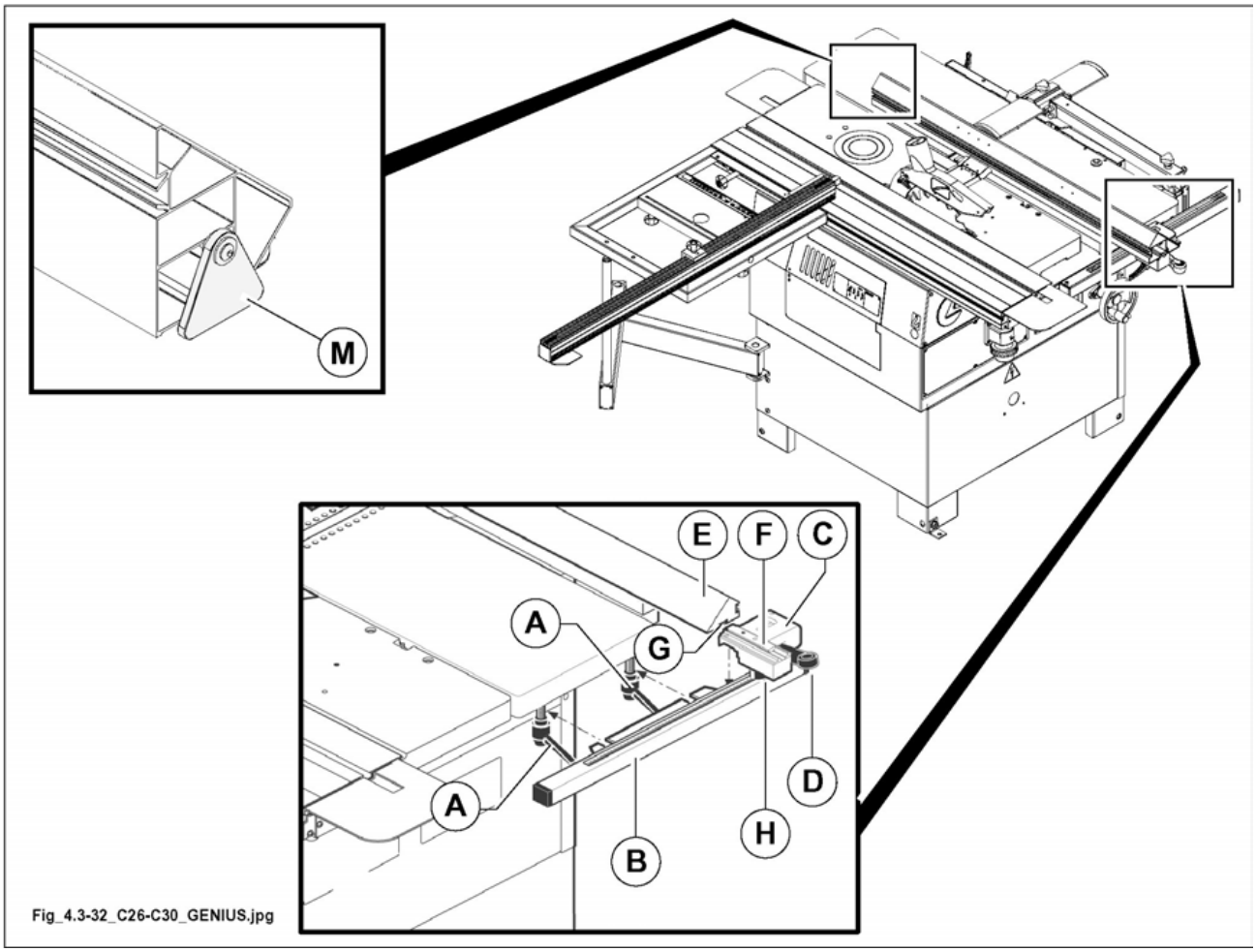

Fig. 4.3-48

SPINDLE MOULDER

(titolo_toupie)

4.3.52 TENONING TABLE AND GUARD - ASSEMBLY

(cu-4-3-52-0.0)

OPT

NOTE-INFORMATION:
for packing and transport reasons some machine members are removed.

- Insert the wedge (A fig. 4.3-52) in the slot on the wagon.
- Fasten the tenoning table (C fig. 4.3-52) to the table (D fig. 4.3-52) or (F fig. 4.3-52), using screws (E fig. 4.3-52).

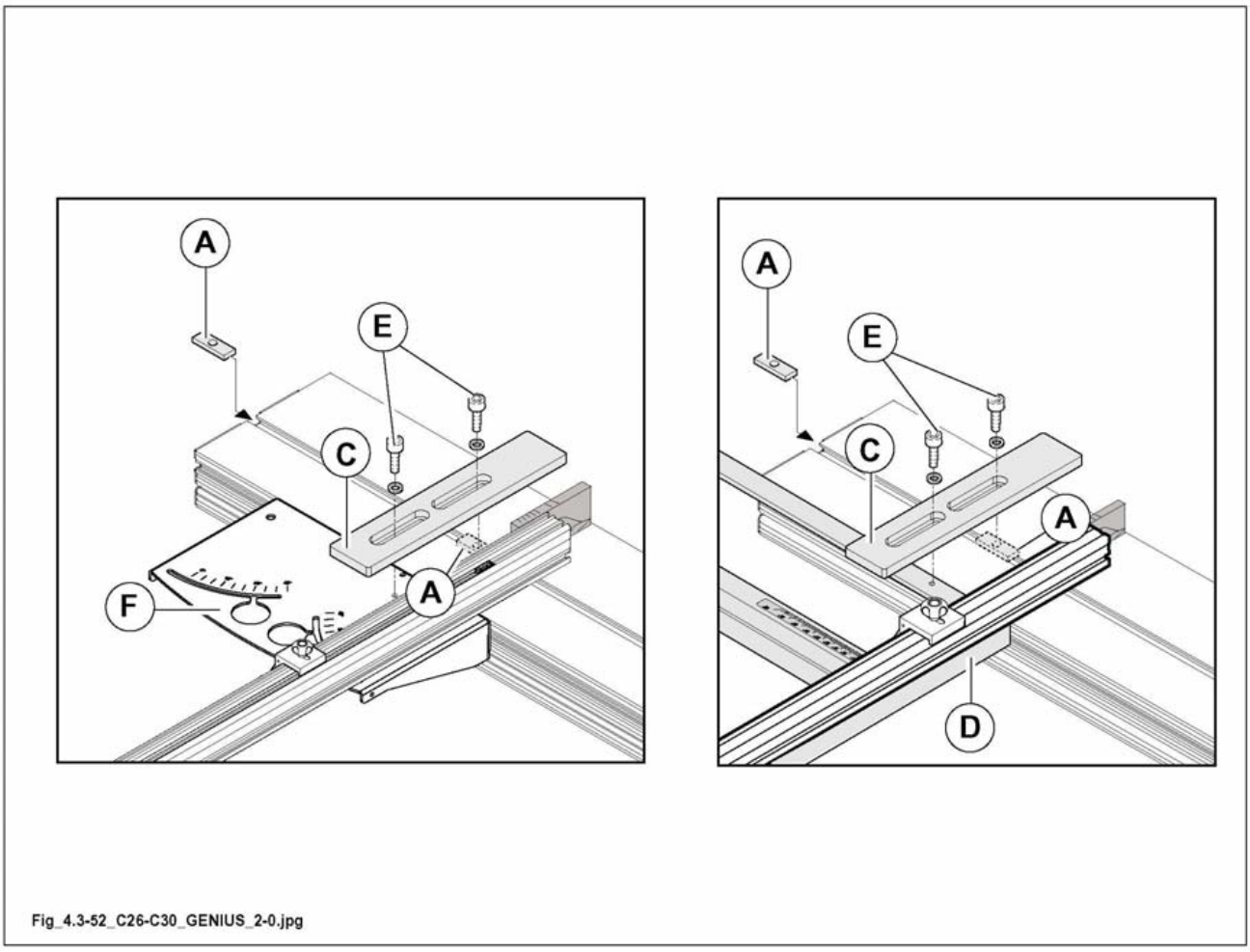

Fig_4.3-52_C26-C30_GENIUS_2-0.jpg

Fig. 4.3-52

THIS MANUAL IS PROPERTY OF SCM INDUSTRIA S.P.A - ANY TOTAL OR PARTIAL REPRODUCTION IS STRICTLY FORBIDDEN

4.3.73 FITTING GUARDS

(cu_4-3-73_0.0)

DANGER-WARNING:
the guard must always be mounted and must be positioned in such a way as to completely cover the tool.

4.3.73.1 SPINDLE MOULDER HOOD GUIDE

(cu_4-3-73-1_0.0)

Position the hood on the working table and screw the two knobs (A fig. 4.3-73-1) into their special holes.

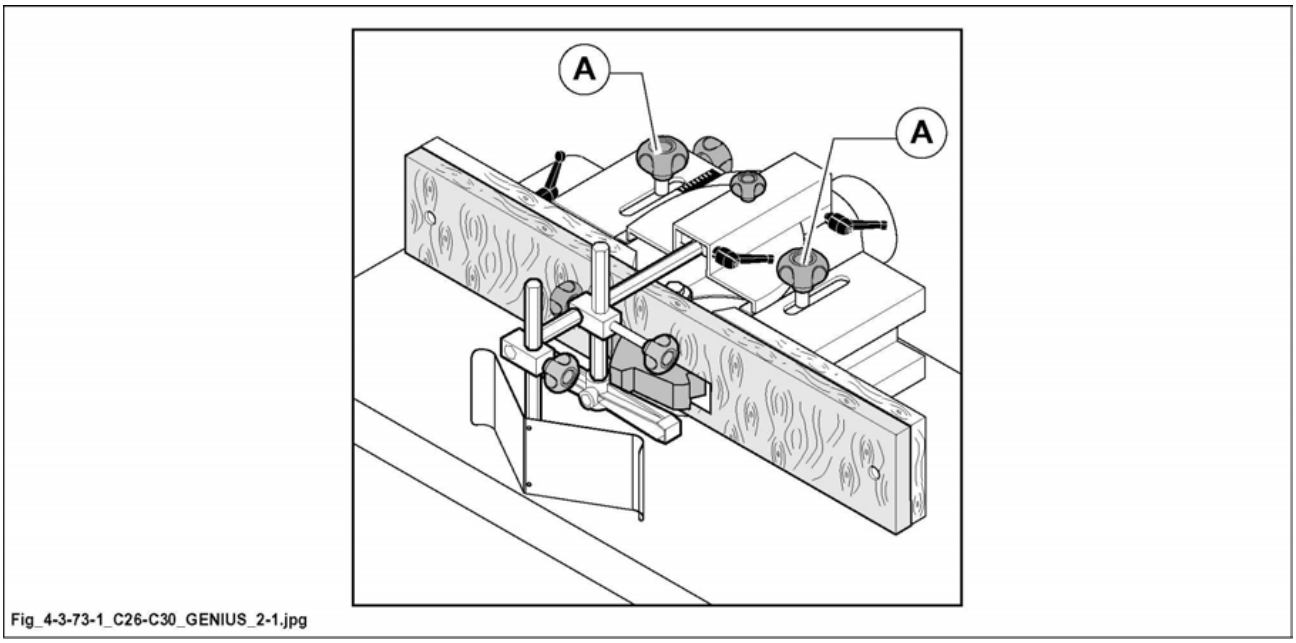

Fig. 4.3-73-1

4.3.73.4 TENONING HOOD-FENCE UNIT

(cu_4-3-73-4_0.0)

OPT

- Rest the hood on the table in the position proper for the milling depth required, the fasten it by tightening knobs (1 fig. 4.3-73-4).

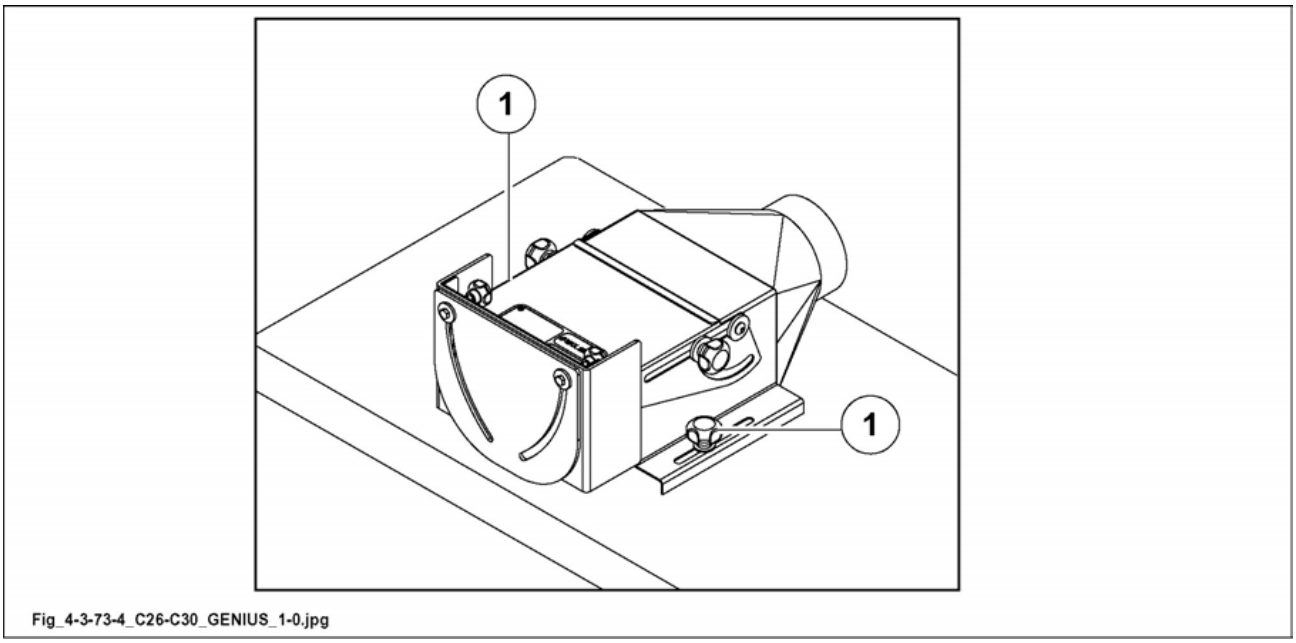

Fig. 4.3-73-4

THIS MANUAL IS PROPERTY OF SCM INDUSTRIA S.P.A - ANY TOTAL OR PARTIAL REPRODUCTION IS STRICTLY FORBIDDEN

4.3.73.5 GUARD FOR MILLING AT THE SPINDLE

(cu_4-3-73-5_0.0)

- Position the hood on the work table centring the reference pin (C fig. 4.3-73-5) in the through hole.
- Screw down the pin (D fig. 4.3-73-5).

DANGER-WARNING:
all adjusting operations are to be carried out with standstill spindle.

DANGER-WARNING:
before starting working manually turn the tool to make sure that there is no contact with the fixed parts.

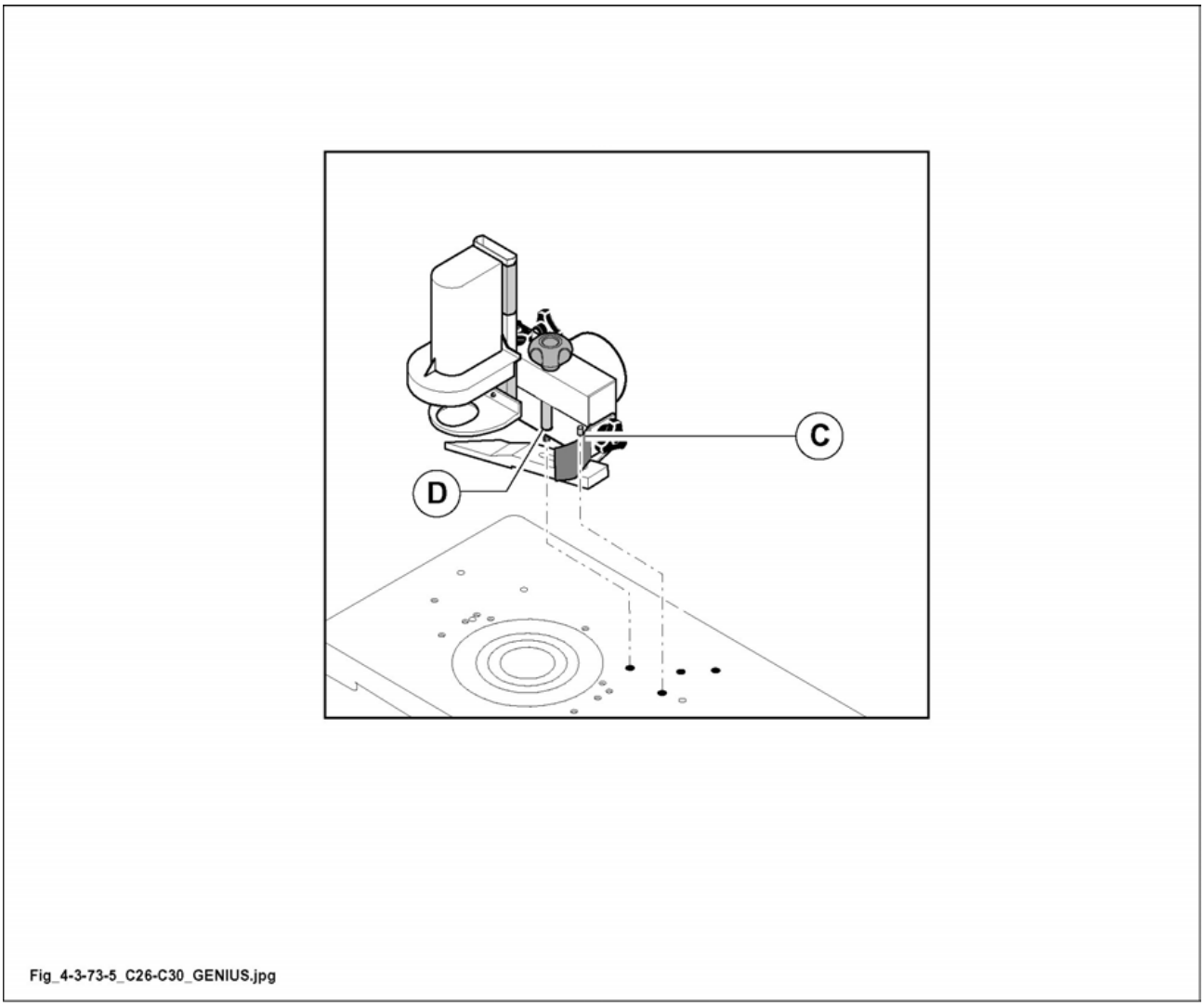

Fig. 4.3-73-5

(vuota_4-06)

 THIS MANUAL IS PROPERTY OF SCM INDUSTRIA S.P.A - ANY TOTAL OR PARTIAL REPRODUCTION IS STRICTLY FORBIDDEN

4.3.82 TOOL FITTING - SAFETY NOTES

(cu_4-3-82_0.0)

SAFETY OVER ALL

- **Circular blades may not be fitted to the spindle.**
- **It is not permitted to insert shims between the spacing rings of the spindle to willigly unbalance the tools.**
- Each working shall be separately considered and you have to fit the proper guard.
- The min. hole diameter on the table depends on the tool and the height at which the cutter is set.
  To get the hole as small as possible use the supplied rings (T fig. 4.3.82 supplied with machine).
  In this way you reduce the risk that the workpiece oscillates and fits into the cutters during its passage on the hole.
- Make sure that the last ring with screw or nut for tool locking (untiunscrewing device) has a sufficient grip on the spindle, then clamp.
- Adjust the hood - fence unit in order to reduce the opening between fence halves and tool to a minimum.
- The tool adjustment shall be carried out with the machine off and with proper instruments (gauge, comparator).
- **Before working make sure that there is no contact between the tool with the machine parts.**

DANGER-WARNING:
all adjusting operations are to be carried out with standstill spindle.

NOTE-INFORMATION:
the operator may use both set of tools and single cutters.
In that case it is convenient to number the single cutters.
Each number indicates:
- a measure corresponding to the tool height from the worktable.

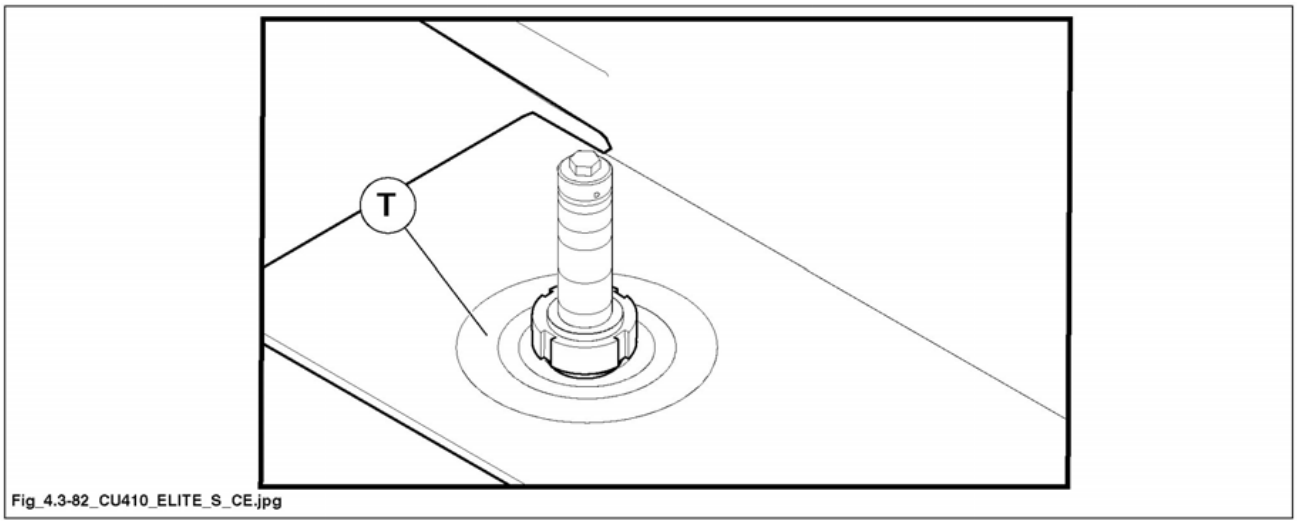

Fig. 4.3-82

4.3.82.1 TOOL FITTING

(cu_4-3-82-1_0.0)

DANGER-WARNING:
all adjusting operations are to be carried out with standstill spindle.

DANGER-WARNING:
use proper gloves for handling the tools.

Before carrying out any of the operations make sure to cut the main electric power and disconnect socket (T fig. 4.3-82-1) from plug (S fig. 4.3-82-1).

- Release lever (A fig. 4.3-82-1).
- Lift the spindle shaft up to its maximum height by turning the handwheel (B fig.4.3.82.1).
- Open the door (V fig.4.3.82.1) (which acts on a microswitch that stops the motor starting up).
- Lock rotation of the router spindle turning it manually until managing to lock it with the accessory pin (C fig.4.3.82.1)
- Loosen knob (D fig. 4.3-82-1).
- Raise door (L fig. 4.3-82-1) of the spindlemoulder hood (1 fig. 4.3-82-1).
- If the shaping hood (2 fig. 4.3-82-1) is installed on the machine, disassemble the guard (Q fig. 4.3-82-1) and the tracer rests (T fig. 4.3-82-1), while with the tenoning hood (3 fig. 4.3-82-1) open the door (Z fig. 4.3-82-1) to mount the cutters.
- Loosen the screw (R fig. 4.3-82-1) by means of the accessory wrench.
- Remove spacer rings (E fig. 4.3-82-1).
- Remove if necessary rings (S fig. 4.3-82-1) from the machine table.
- Mount milling cutters (F fig. 4.3-82-1) on the moulder shaft using the special spacer rings between one tool and another.

CAUTION:
fit the cutters as low as possible on the spindle, taking every precaution to avoid vibrations.
It is prohibited to mount tools with a diameter and weight exceeding that indicated in Chap. 3.

- Tighten screw (R fig. 4.3-82-1).
- Unlock the rotation of the moulder shaft by removing the pin (C fig.4.3.82.1).
  Close the door (V fig. 4.3-82-1).
- Return the moulder guard (1,2,3 fig. 4.3-82-1) to the initial conditions (tighten the door L, Z fig.4.3.82.1 or the guard Q fig.4.3.82.1).

NOTE-INFORMATION:
the shaft vertical positioning should always be executed starting from its lower part, to counteract the effect of any possible mechanical slack.

THIS MANUAL IS PROPERTY OF SCM INDUSTRIA S.P.A - ANY TOTAL OR PARTIAL REPRODUCTION IS STRICTLY FORBIDDEN

NOTE-INFORMATION:
the operator may use both set of tools and single cutters.
In that case it is convenient to number the single cutters.
Each number indicates:
- a measure corresponding to the tool height from the worktable.

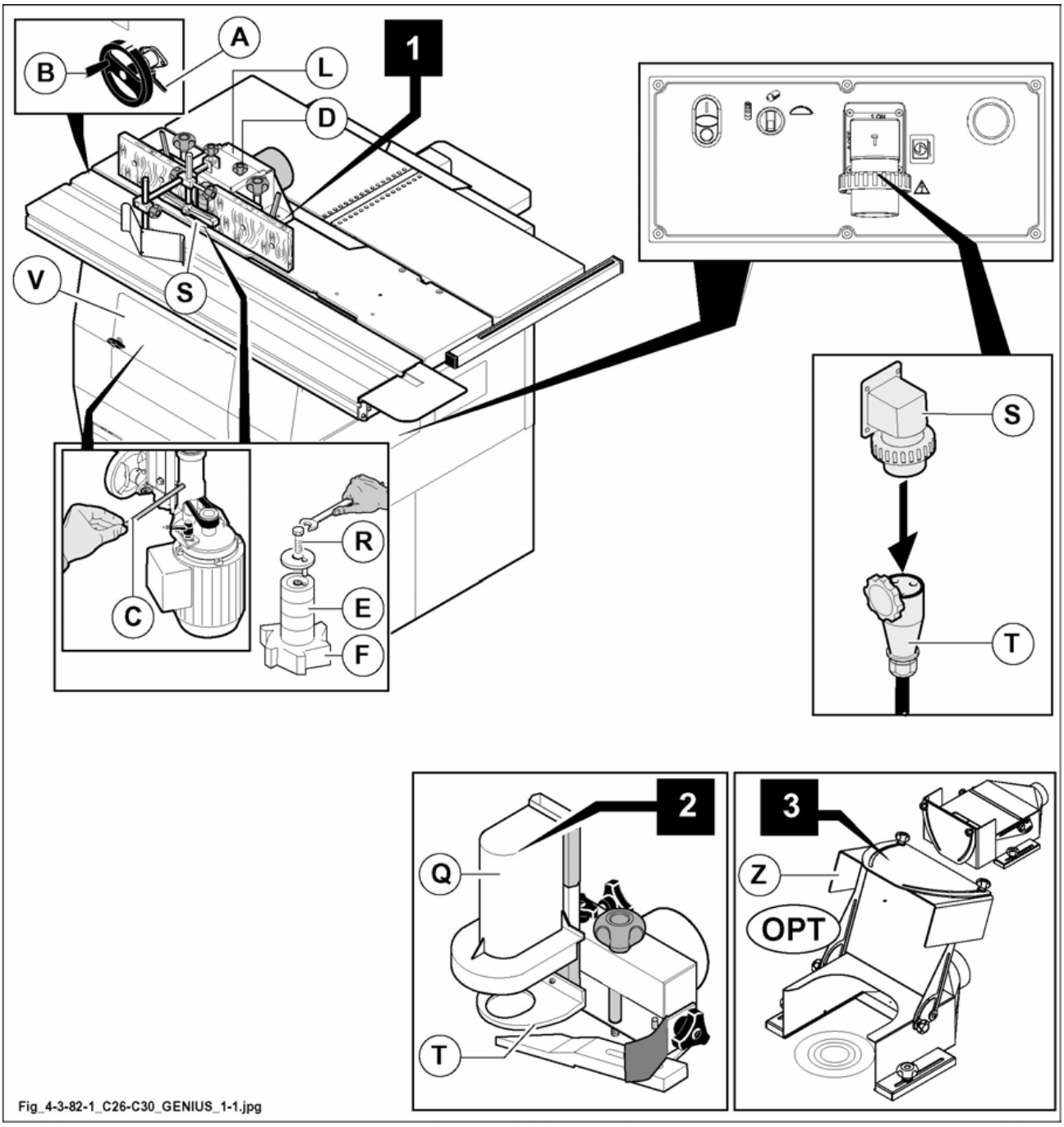

Fig. 4.3-82-1

(vuota_4-07)

 THIS MANUAL IS PROPERTY OF SCM INDUSTRIA S.P.A - ANY TOTAL OR PARTIAL REPRODUCTION IS STRICTLY FORBIDDEN

4.4 ELECTRIC CONNECTION AND GROUNDING

(st-el_4-4_0.0)

DANGER-WARNING:
the installation operations must be performed by specialised technical personnel SCM ***or personnel authorised by the manufacturer.***

4.4.1 REQUISITES FOR THE ELECTRICITY SUPPLY SYSTEM

(st-el_4-4-1_0.0)

DANGER-WARNING:
the electric connection and subsequent controls must be carried out by a specialised electrician, referring to the wiring diagram supplied with the machine.

DANGER-WARNING:
switches with electronic brake cannot be connected to:
- curent generators, emergency generators, gensets
- electronic mains transformers
- static inverters
- mains voltages with non-conforming sinusoidal shape.

Make sure that the main electric system of the factory can absorb the machine power and that earthing system meets the norms in force.

In the connection point the supposed short-circuit current shall be lower than 10 kA.
Make sure that the mains voltage corresponds to the machine one.

NOTE-INFORMATION:
the right working voltage is indicated on the plate fig.4.4; tolerance range: +/- 5%.

For voltage values out of this range you have to set the mains voltage.
Read out the value of the total absorbed current (Ampere) on the machine identification plate.



DANGER-WARNING:
the electric connection and subsequent controls must be carried out by a specialised electrician, referring to the wiring diagram supplied with the machine
- the best conditions are that the machine is supplied with the exact voltage as carried on the machine's identification plate
- check that your electrical line equipment is suitable for machine power supply requirements (refer to Table)
- use the rated current values (In) to calculate the cross-section of the electric cables.



DANGER-WARNING:
consider that the cross-section of the power cables does NOT depend on the rated current alone, but also on the length of the installation and on the short-circuit current value.
Therefore consider the table only as indicative and first analysis. Whoever performs the electric connection for the final customer must make the correct evaluations.
To simplify reading, the table only indicates the use of "fuses", but switches can be used as well as long as they have the same size.

THIS MANUAL IS PROPERTY OF SCM INDUSTRIA S.P.A - ANY TOTAL OR PARTIAL REPRODUCTION IS STRICTLY FORBIDDEN

The yellow-green earth cable must have the same section as the power cable wires and must comply with the current safety regulations of the country where the machine is installed.

DANGER-WARNING:
use the table indicated below and select the cable section and the "RETARDED INTERVENTION" fuses to fit ahead of the machine.

ELECTRICAL INPUT (Amp.)	CABLE SECTION (mm²)	AM FUSE
0 → 10	2,5	12 A AM
10 → 14	4,0	16 A AM
14 → 18	6,0	20 A AM
18 → 22	6,0	25 A AM
22 → 28	10,0	32 A AM
28 → 36	10,0	40 A AM
36 → 46	16,0	50 A AM
46 → 54	16,0	63 A AM
54 → 76	25,0	80 A AM
76 → 92	35,0	100 A AM
92 → 110	50,0	125 A AM

DANGER-WARNING:
- the machine is not protected against risks of electrocution due to indirect contact (ref. 6.3 of the European Standard EN60204-1).
- The machine is not protected against overcurrent arising from a short circuit in the machine feeder (ref. 7.2 of European Standard EN60204-1).

NOTE-INFORMATION:
the Customer is in charge of the protection against these risks, and must refer to specialised technicians (electrician who installs electric systems).

NOTE-INFORMATION:
with regard to this, in the following systems:

1) TT type, Low Voltage, mains-powered
2) TN type, Medium Voltage, mains-powered

the machine power supply line must be protected by Residual Current Devices, suitably coordinated with the user's earthing system (ref. IEC 60364-4-41; HD 60364-4-41).

The maximum value of the differential intervention current is equal to 300 mA for environments with a greater risk of fire (to ensure protection against fire caused by currents dispersed towards the ground).

For TN type systems, the system must be type TN-S with separate neutral and protective earth conductors (IEC 60364-4-482; HD 384.4.482).

SCM machines provide the end-customer with a TN-S power supply. Under different situations, transformers (available as an option) or auto-transformers must be installed upstream the machine.

4.4.2 ELECTRIC CONNECTION

(st-el_4-4-2_0.0)

DANGER-WARNING:
before performing the connection disconnect the main line switch; in any case check that the electrical cable used for the machine connection is not live.

Connect the machine to the elecric system by proceeding as follows:
- prearrange the feeding cable near the terminal board (A fig. 4.4);
- connect the cables to the terminals L1-L2-L3 of the socket and the earthing cable to the terminal marked by the symbol (⏚ / PE);
- connect socket (A fig. 4.4) to plug (B fig. 4.4).

4.4.3 CHECK THE CORRECT CONNECTION

(st-el_4-4-3_0.0)

DANGER-WARNING:
CAREFUL WITH THE ELECTRICAL CONNECTION.
Incorrect rotation of the tool causes danger to the operator and damage to the product. Start the machine for a fraction of a second and check that the saw blade turns clockwise. Should rotation be incorrect, immediately switch off the power and invert two of the three phases on the terminals (L1-L2-L3).

CAUTION:
if the machine is connected by a mobile supply cable, use a flexible rubber cable marked H07RN-F or A07RN-F.
The relative socket shall meet DIN 49463 as well as IEC 309-1 and IEC 309-2.

DANGER-WARNING:
in the switches with electronic brake, even with the motor stopped, the motor is not galvanically disconnected from the mains. The switch supplies the motor with voltage even after it is switched off;
in case of long machining pauses or machine stops remove the power supply cable socket.

NOTE-INFORMATION:
the documentation with wiring diagram and certificates is inside the accessories case.

THIS MANUAL IS PROPERTY OF SCM INDUSTRIA S.P.A - ANY TOTAL OR PARTIAL REPRODUCTION IS STRICTLY FORBIDDEN

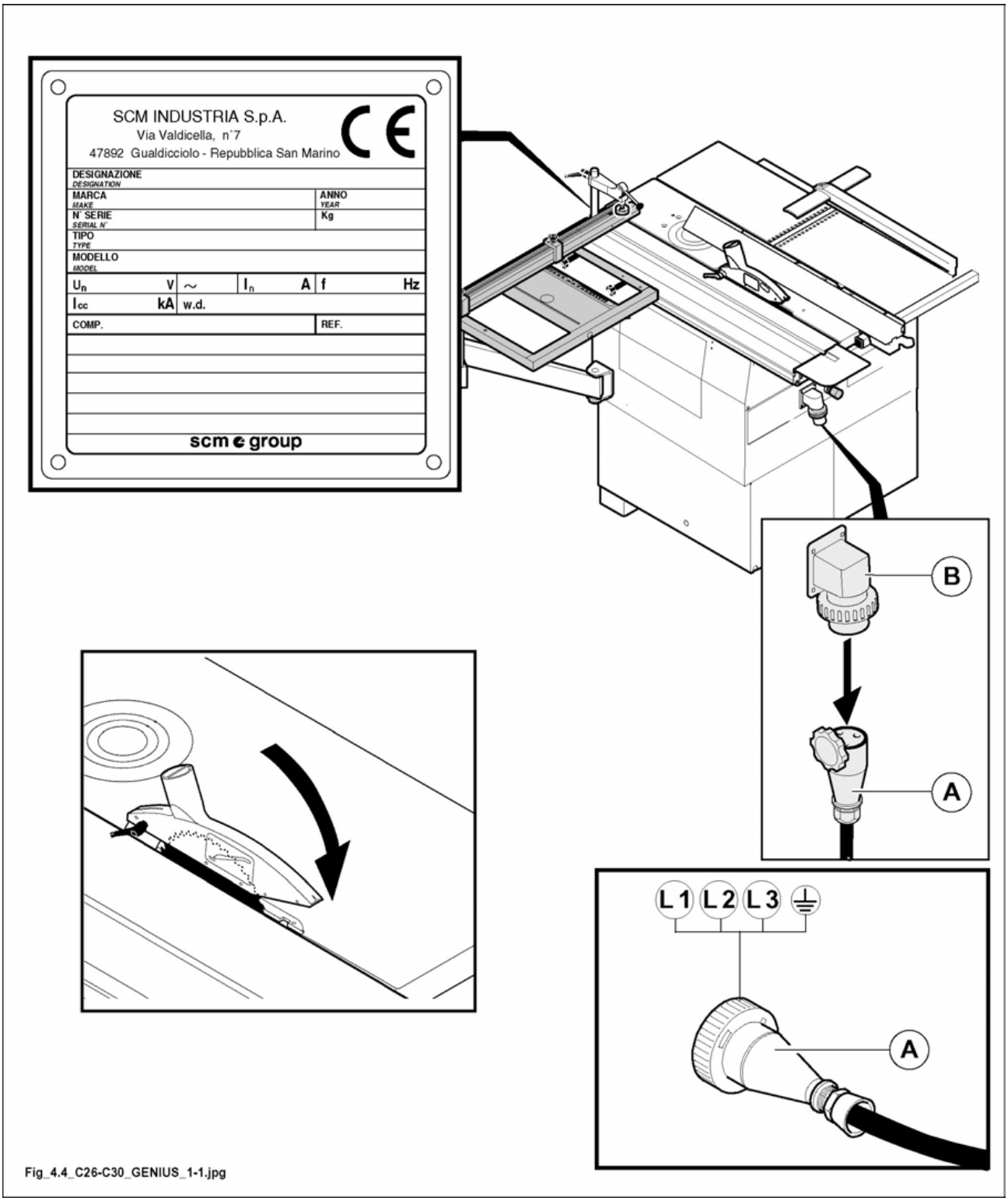
SCM INDUSTRIA S.p.A.
Via Valdicella, n°7
47892 Gualdicciolo - Repubblica San Marino
CE
DESIGNAZIONE
DESIGNATION
MARCA
MAKE
ANNO
YEAR
N° SERIE
SERIAL N°
Kg
TIPO
TYPE
MODELLO
MODEL
Un V ~ In A f Hz
Icc kA w.d.
COMP.
REF.
scm group
B
A
L1 L2 L3
A
Fig_4.4_C26-C30_GENIUS_1-1.jpg

Fig. 4.4

4.5 CONNECTION TO THE SUCTION SYSTEM

(ev_4-5_0.0)

DANGER-WARNING:
the connection to the suction system is necessary for the machine operation and for the operator's safety. Always work with the suction system in operation.

NOTE-INFORMATION:
the extraction system must comply with EN 12779:2004.

Always start the suction system and the operator assembly motor at the same time.

Connect the exhaust pipes to the suction system with hoses of proper diameter.

NOTE-INFORMATION:
we recommend that the suction sleeve is arranged out of the suction hood in order to avoid clogging caused by chips.
The suction pipe fitting should not hinder the operator during the woodworking process.

Connect the hose to suction hood:
- (A fig. 4.5) diameter 120 mm (Moulder hood)
- (B fig. 4.5) diameter 100 mm (Shaping hood)
- (C fig. 4.5) diameter 60 mm (Saw protection)
- (D fig. 4.5) diameter 120 mm (Surfacing-Thicknessing planer hood)
- (E fig. 4.5) diameter 120 mm (Saw suction)
- (F fig. 4.5) diameter 120 mm (OPT) (Mortising machine suction)
- (H fig. 4.5) diameter 120 mm (OPT) (Tenoning shaper hood)

Clamp it with the proper metallic clip to ensure the contact between suction hood and hose.

(A , D , E , H (OPT), F (OPT))	the suction system shall ensure a flow equal to 814 m^3/h at a flow speed at least of 20 m/s - chips dry (1140 m^3/h --> 28 m/s - chips wet).
(B)	the suction system shall ensure a flow equal to 565 m^3/h at a flow speed at least of 20 m/s - chips dry (792 m^3/h --> 28 m/s - chips wet).
(C)	the suction system shall ensure a flow equal to 204 m^3/h at a flow speed at least of 20 m/s - chips dry (285 m^3/h --> 28 m/s - chips wet).

These values ??must be checked before starting work.
If other machines are connected to the central system, perform a test when all the suction systems are running.
Good suction operation reduces the risk of inhalation of dust.

The operator must be informed about the risks caused by exposure to dust (see Par. 3.5.1) and the factors that influence its exposure.

Certain factors that reduce the emission of dust in the work environment are:
- regular maintenance of the tools, the machine and the extractor system
- correct speed selection (where adjustment is possible);
- type of material machined
- importance of local aspiration on each operating unit (dust collection at source)
- correct adjustment of earmuffs and deflectors
- correct use of personal protection equipment (PPE).

THIS MANUAL IS PROPERTY OF SCM INDUSTRIA S.P.A - ANY TOTAL OR PARTIAL REPRODUCTION IS STRICTLY FORBIDDEN

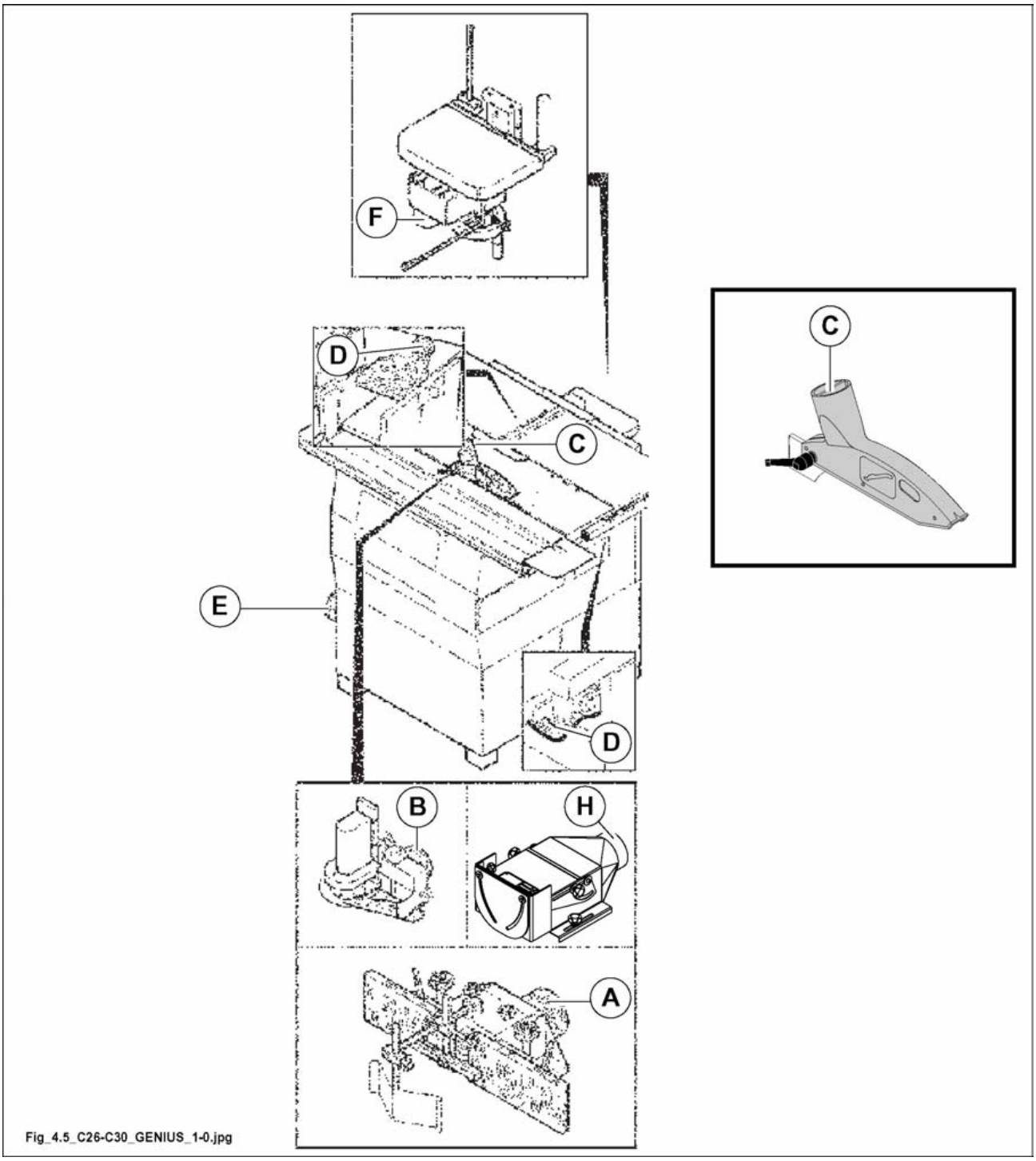

Fig. 4.5

NOTE-INFORMATION:
to connect the machine to the suction plant, use hoses made of antistatic and self-decomposing material, in order to prevent electric discharges due to an accumulation of static electricity (the discharges could compromise the right operation of the electronic components on the machine) and to avoid possible fire to propagate.

INDEX

5.1 Controls board 2


5.2 Emergency buttons 3


5.4 General controls before machine starting 5


5.4.1 Profiling operations 6


5.4.2 Milling at the spindle (shaping) 6


5.4.3 Tenoning 6


5.5 Machine start-up - shutdown 8

5.1 CONTROLS BOARD

(ev_5-1_0.0)

The control board depends on the machine version:

Ref.	Image	Function	Use	
1	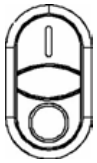	Start/stop pushbutton		= Press to start.
				= Press to stop.
2		Emergency button. To shut off the motor supply voltage with intervention of the brakes when present.	Pressed: machine in emergency conditions. Turn to the arrow direction to reset.	
3	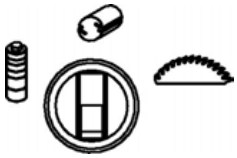	3-positions selector switch. It operates and stops the motor of the selected working unit.		saw assembly powered
				planer unit powered
				moulder unit powered

THIS MANUAL IS PROPERTY OF SCM INDUSTRIA S.P.A - ANY TOTAL OR PARTIAL REPRODUCTION IS STRICTLY FORBIDDEN

5.2 EMERGENCY BUTTONS

(ev_5-2_0.0)

In case of danger if you press the emergency button, any function of the machine is locked.

Emergency buttons present on the machine are:

- on the electrical control panel (1 fig. 5.3).
- Surfacing table side (2 fig. 5.3).

Periodically press the emergency buttons to check whether they are efficient.

DANGER-WARNING:

any anomalies found during the control of these devices, must be reported promptly to the manager, who will put the machine out of service and call the electrical, mechanical maintenance personnel or the SCM ***Support Service.***

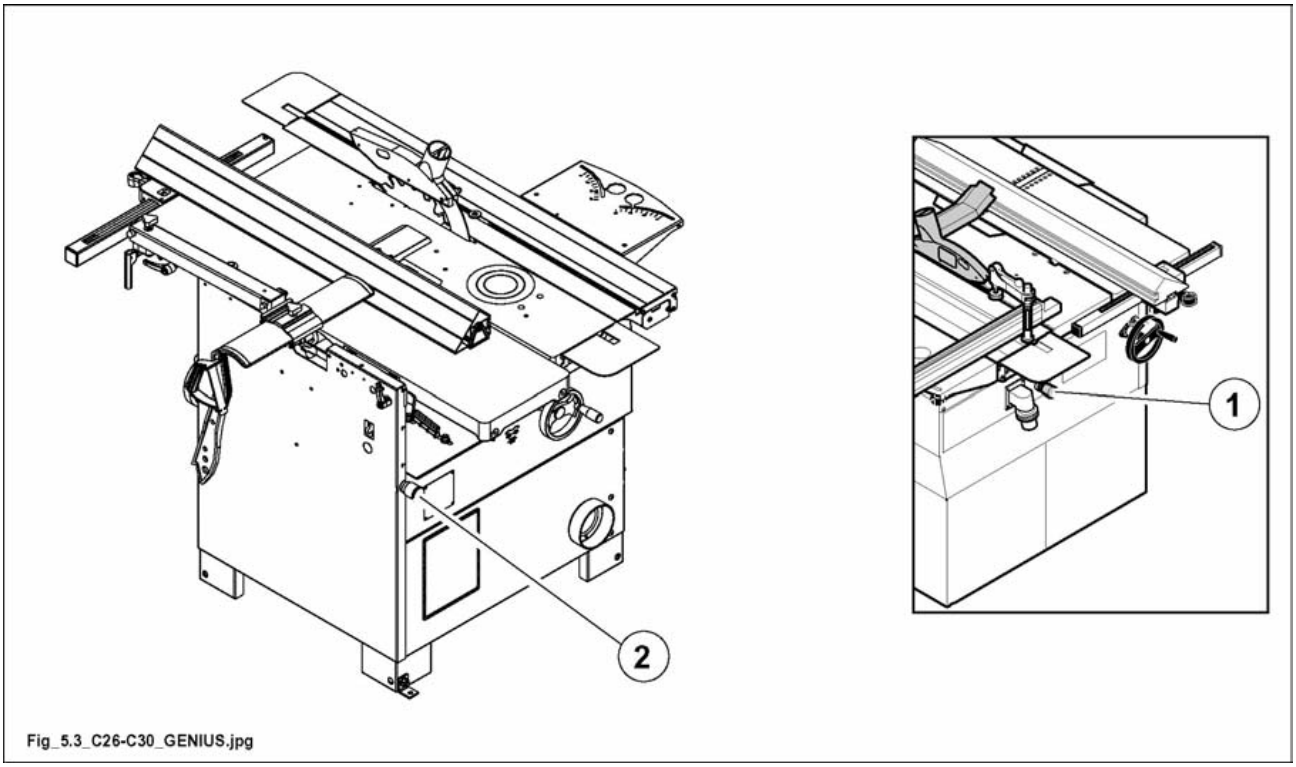

Fig. 5.3

(st_5-001)

 THIS MANUAL IS PROPERTY OF SCM INDUSTRIA S.P.A - ANY TOTAL OR PARTIAL REPRODUCTION IS STRICTLY FORBIDDEN

5.4 GENERAL CONTROLS BEFORE MACHINE STARTING

(ev_5-4_0.0)

Make sure that:
- The spindle motor housing door is closed.
- The machine is connected to the suction system.
- The emergency buttons (2 fig. 5.4) are in the right position (if necessary release them).

DANGER-WARNING:

any anomalies found during the control of these devices, must be reported promptly to the manager, who will put the machine out of service and call the electrical, mechanical maintenance personnel or the SCM ***Support Service.***

NOTE-INFORMATION:
make sure that the speed indicated is proper for the tool fitted to the saw spindle.

FORBIDDEN:
do not modify or exclude any of the circuits or devices installed.

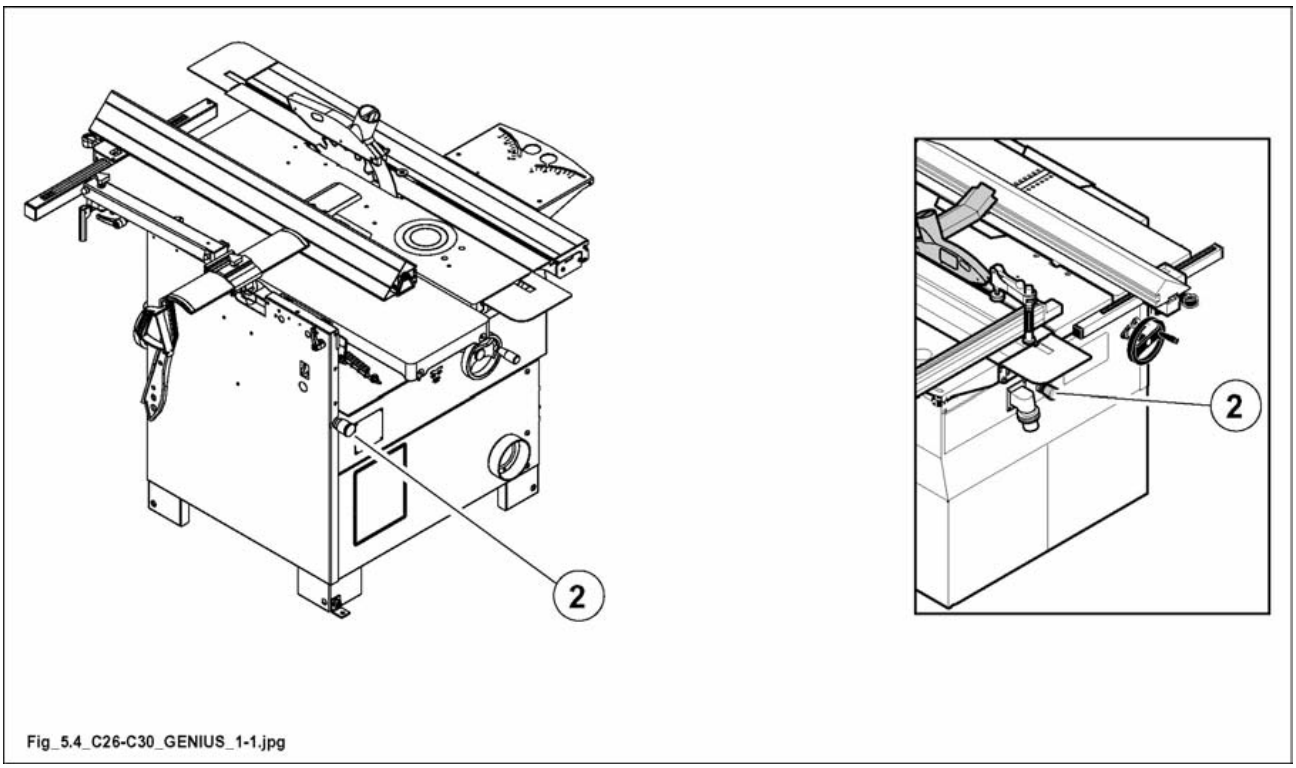

Fig. 5.4

5.4.1 PROFILING OPERATIONS

(cu_5-4-1_0.0)

Make sure that:
- hood-fence unit (V fig. 5.4-1) is in right position and locked by knobs (H, B fig. 5.4-1).
- NEVER exceed the max speed nMAX indicated on the tool; see Chapter 9A.
- Presser shoes (F and G fig. 5.4-1) cover the toolas much as possible (see paragraph 9.50A); for the workpiece feed use a proper pusher (S fig. 5.4-1).

5.4.2 MILLING AT THE SPINDLE (SHAPING)

(cu_5-4-2_0.0)

Check that:
- guard (P fig. 5.4-1) is in the right position (with the pin inserted in the slot on the table) and locked by the pin (M fig. 5.4-1).
- The speed is proper for the tool (see Chapter 9A).

5.4.3 TENONING

(cu_5-4-3_0.0)

OPT

Check that:
- tenoning hood (T fig. 5.4-1) is in right position and locked by knobs (R fig. 5.4-1).
- The max. spindle speed is 5000 rpm and that it does not exceed the max. speed permitted for the fitted tool.

THIS MANUAL IS PROPERTY OF SCM INDUSTRIA S.P.A - ANY TOTAL OR PARTIAL REPRODUCTION IS STRICTLY FORBIDDEN

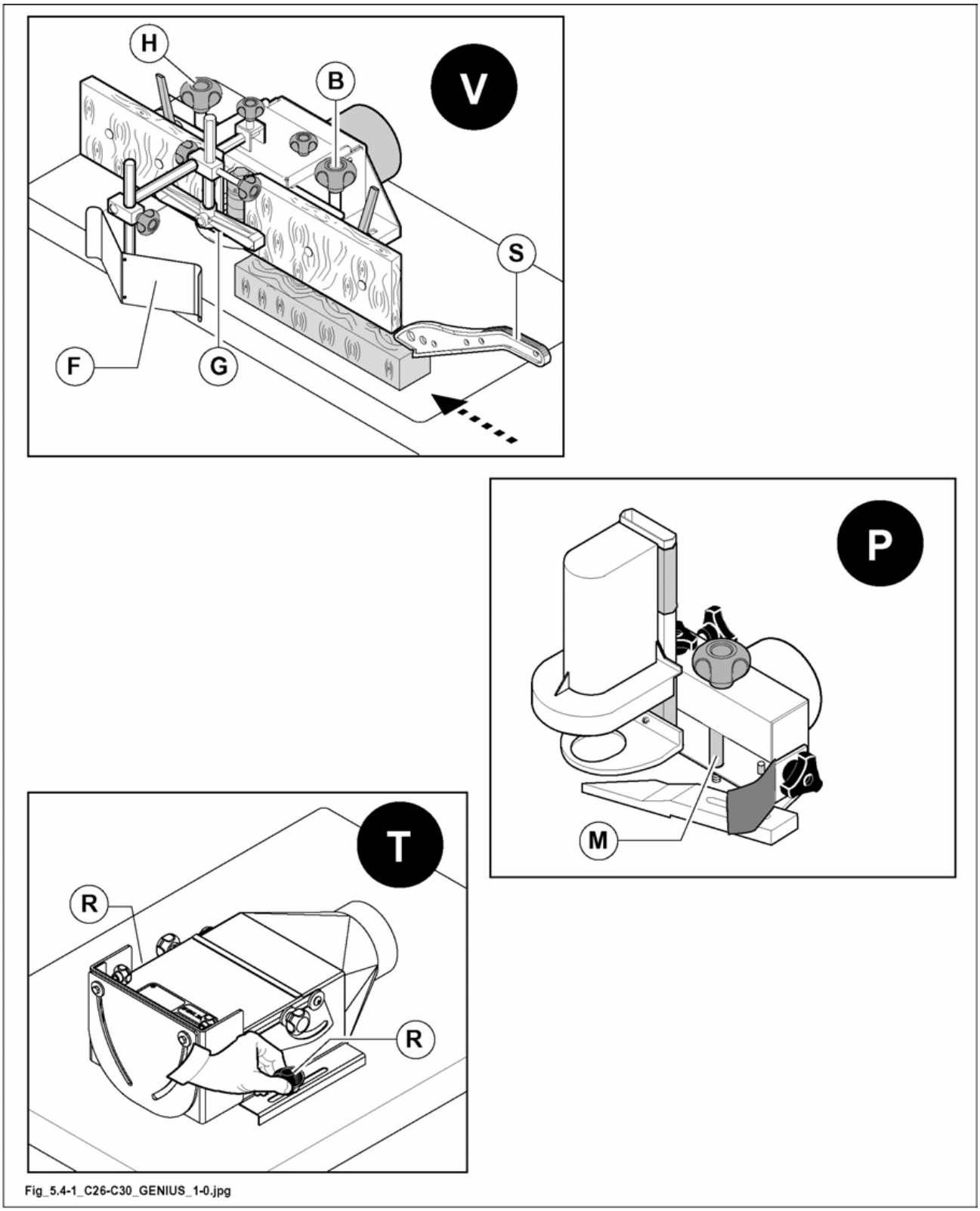

Fig. 5.4-1

5.5 MACHINE START-UP - SHUTDOWN

(ev_5-5_0.0)

DANGER-WARNING:
before switching on the machine, ensure that all the tools are well tightened, that the set spindle rotation speed is correct (see Chapter 9A) and that the router protection suitable for the type of machining has been installed.

NOTE-INFORMATION:
carry out the checks of par. 5.4.

Machine Start procedure

- Move the selector switch (C fig. 5.5) in the chosen working position.
- Press the (E fig. 5.5) button.
- Move in the relevant working site:

A = Surfacing planer ..... B = Thicknessing planer
C = Drilling (OPT) ..... D = Parallel cutting
E = Moulder machining ..... F = Slide machining

Machine Stop procedure

1) Press the (D fig. 5.5) button.

FORBIDDEN:
it is forbidden to stop the motor by turning selector (C fig. 5.5).

DANGER-WARNING:
ONLY FOR MOULDER UNIT
if there is no power supply the electronic brake does not work.
CAUTION! MOVING TOOLS. Do not insert hands in the danger area.

After the third unsuccessful attempt to brake (stopping time of more than 10 seconds) or after a braking attempt of more than 14 seconds, the electronic brake would block automatically thus avoiding the starting of the selected function.
Disconnect the power supply to the machine to rest the function.
If the problem remains, contact [manufacturer].

THIS MANUAL IS PROPERTY OF SCM INDUSTRIA S.P.A - ANY TOTAL OR PARTIAL REPRODUCTION IS STRICTLY FORBIDDEN

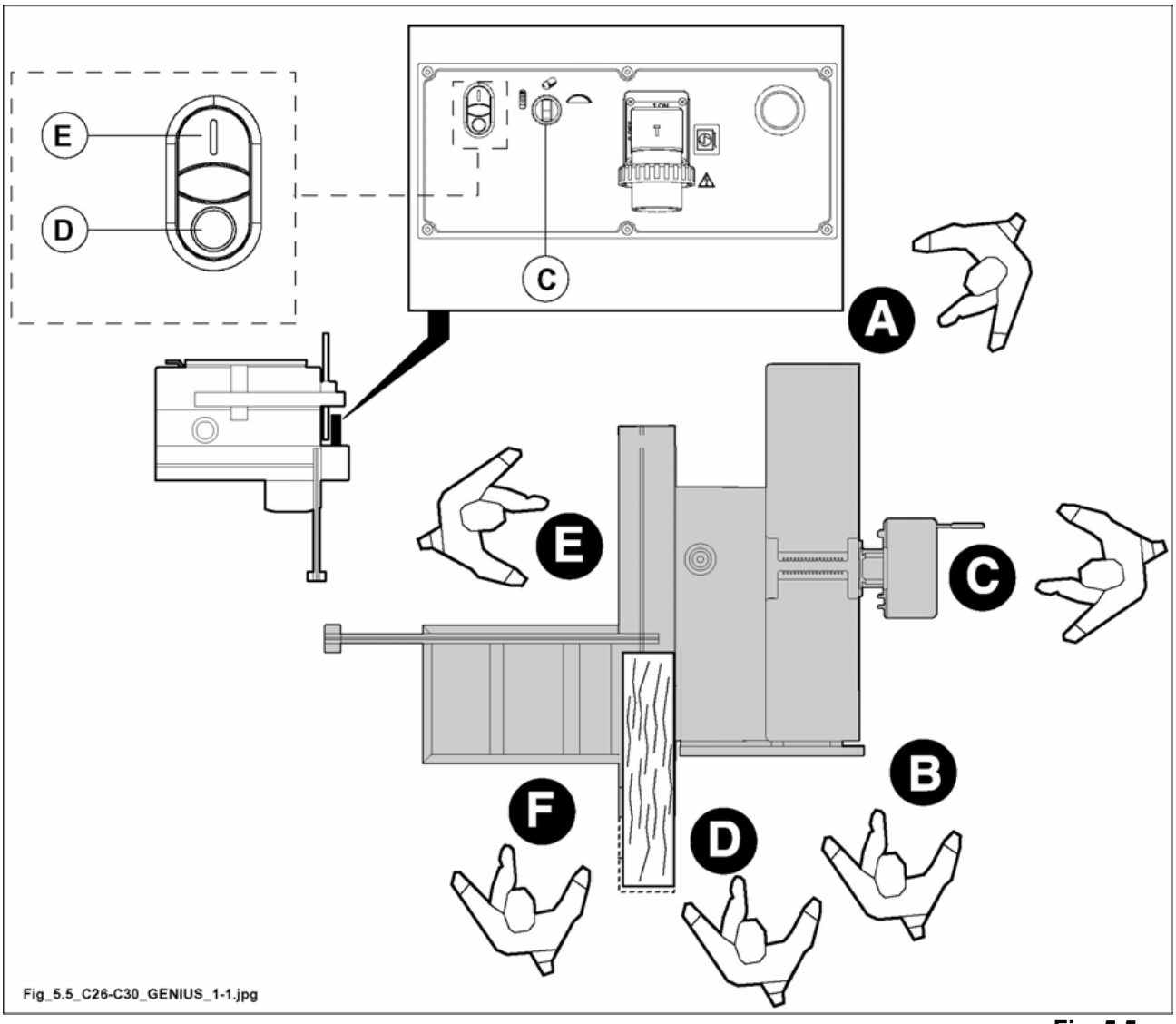

Fig. 5.5

DANGER-WARNING:
in case of long machining pauses or machine stops remove the power supply cable socket.

INDEX


6.1 Riving knife adjusting 2


6.3 Axis positioning 4


6.3.1 Height adjusting of the saw unit 4


6.3.2 Saw blade tilting 4


6.4 Correct use for circular saw 5


6.8 Guard adjusting 6

6.1 RIVING KNIFE ADJUSTING

(ev_6-1_0.0)

DANGER-WARNING:
do not work with bare hands; wear safety gloves.

NOTE-INFORMATION:
the machine is always equipped with 1 riving knive.

DANGER-WARNING:
always fit the proper riving knife (supplied).

DANGER-WARNING:
before carrying out any of the operations make sure to cut the main electric power and disconnect socket T from plug S.

DANGER-WARNING:
WAIT UNTIL THE SAW BLADES ARE STILL.

1) Position the saw unit at 90° and lower it as far as it will go.
2) Open the door (N fig. 6.1).
3) Adjust dividing knife (F fig. 6.1) height by unloosing nuts (G fig. 6.1).

DANGER-WARNING:
adjust the position of the riving knife so that its distance from the saw blade is between 3 and 8 mm.
The dividing knife is in the right position when the saw guard covers a part of the cutting edge of the saw blade.

THIS MANUAL IS PROPERTY OF SCM INDUSTRIA S.P.A - ANY TOTAL OR PARTIAL REPRODUCTION IS STRICTLY FORBIDDEN

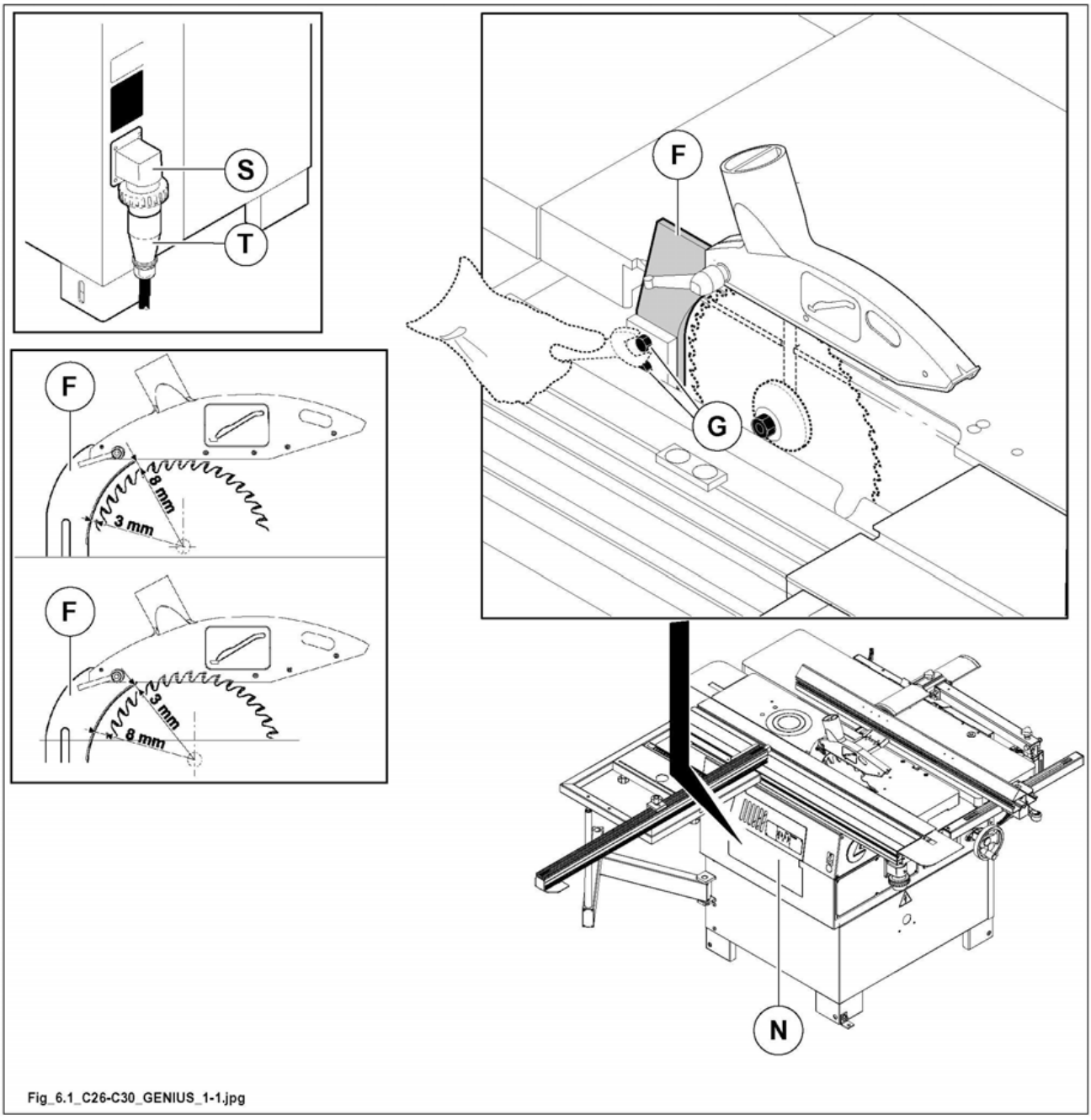

Fig. 6.1

6.3 AXIS POSITIONING

(gu_6-3_0.0)

6.3.1 HEIGHT ADJUSTING OF THE SAW UNIT

(ev_6-3-1_0.0)

- Release knob (E fig. 6.3-1) and adjust handwheel (F fig. 6.3-1) to regulate the saw assembly height.
- Tighten the knob (E fig. 6.3-1) after the adjustment has been made.

NOTE-INFORMATION:
the saw blade height is right when it exceeds the piece thickness by 1-1.5 cm.

FORBIDDEN:
with protective hood fixed to the riving knife, it's strictly forbidden to carry out not-through cuts.

6.3.2 SAW BLADE TILTING

(ev_6-3-2_0.0)

- Loosen the knob (G fig. 6.3-1) and act on the knob (H fig. 6.3-1) to adjust the inclination of the assembly.
- Read the inclination value of the saw blade on the index (L fig. 6.3-1).
- Tighten the knob (G fig. 6.3-1) after the adjustment has been made.

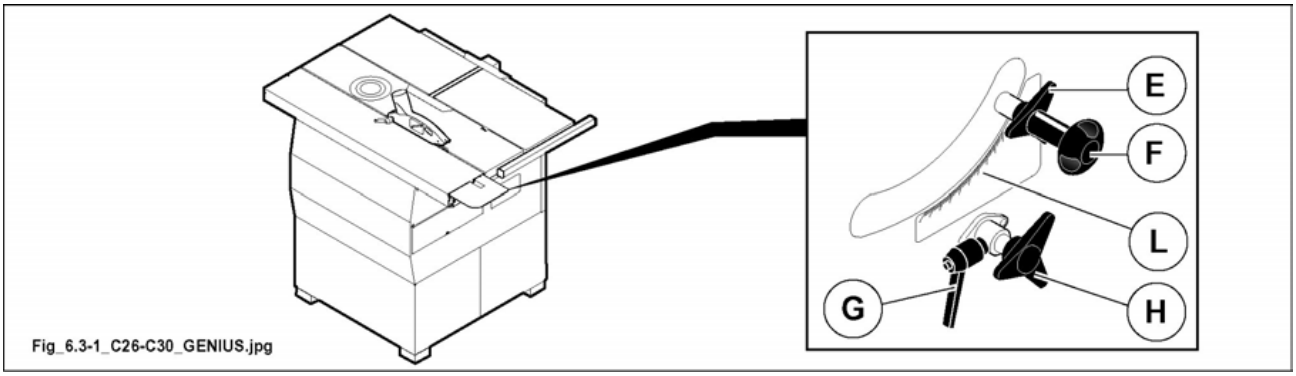

Fig. 6.3-1

THIS MANUAL IS PROPERTY OF SCM INDUSTRIA S.P.A - ANY TOTAL OR PARTIAL REPRODUCTION IS STRICTLY FORBIDDEN

6.4 CORRECT USE FOR CIRCULAR SAW

(mmax_6-4_0.0)

CAUTION:
first make sure that the machine does not vibrate.
Do not try to take off the material when the cut has already started; proceed with a continuous and uniform speed.
Workpiece feeding towards the blade (especially where there are knots) should not be too fast (feeding speed should be in accordance with workpiece thickness).
Do not let workpieces stop between the saw fence and the blade.

DANGER-WARNING:
always remove any trimmings produced during machining because trimmings interposed between the blade and the saw table might damage the machine or be a source of danger for the operator.
Before removal, switch off the machine and wait for the saw blade to stop.

- Avoid contact of the tips against metallic objects.
- When necessary sharpen the saw blade.
- Often clean the steel body and the tips with proper liquid products. Let the saw blade in the bath, then clean it with brush: don't use metallic brushes.
- As regards the toothing at least 2-3 teeth shall cut at the same time (A fig. 6.4). If only one tooth cuts (B fig. 6.4) you don't get a good cutting.
- Whenever this is possible, it is also critical to lift the blade until the whole tooth cutting part protrudes from the wood thickness.

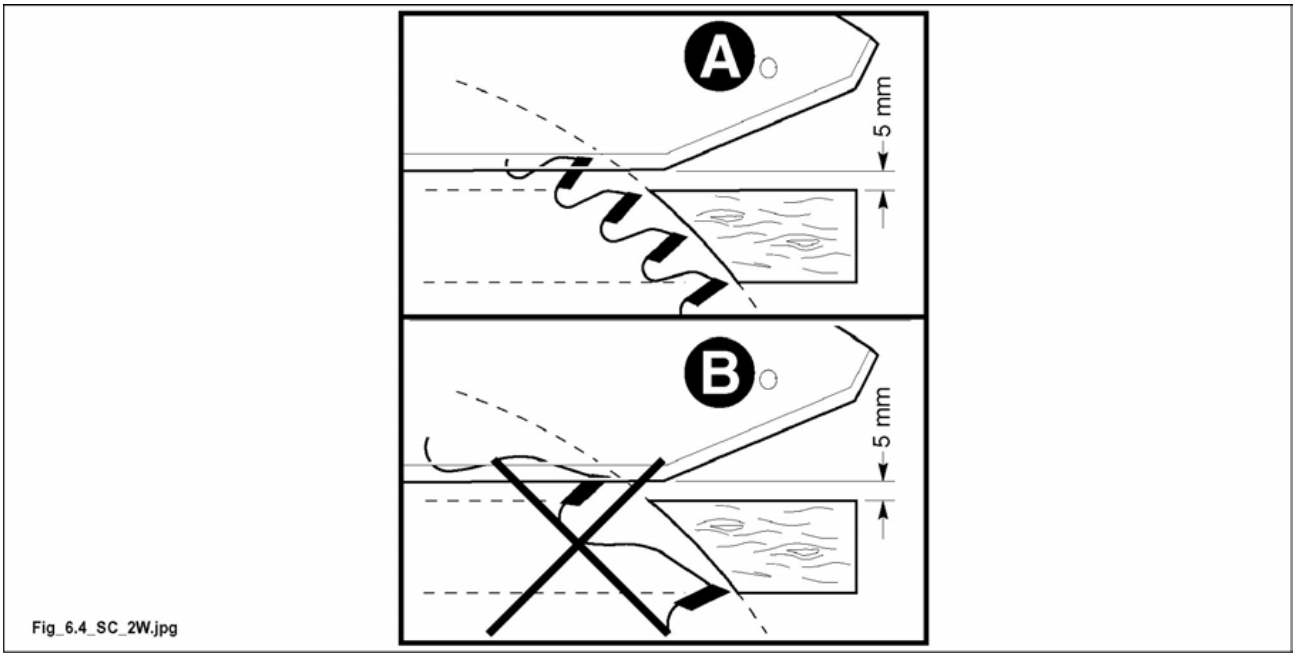

Fig. 6.4

6.8 GUARD ADJUSTING

(hg_6-8_ce_0.0)

- Clamp handle (E fig. 6.8) for locking guard (D fig. 6.8) in the desired position.
- By means of handle (F fig. 6.8) adjust the guard height according to the thickness of the piece to be cut (the distance between guard and piece shall be 2÷3 mm). Such position will be kept.
- The guard is made of such material so that in case of contact with the suction hood, the saw blade is not damaged.

FORBIDDEN:
with protective hood fixed to the riving knife, it's strictly forbidden to carry out not-through cuts.

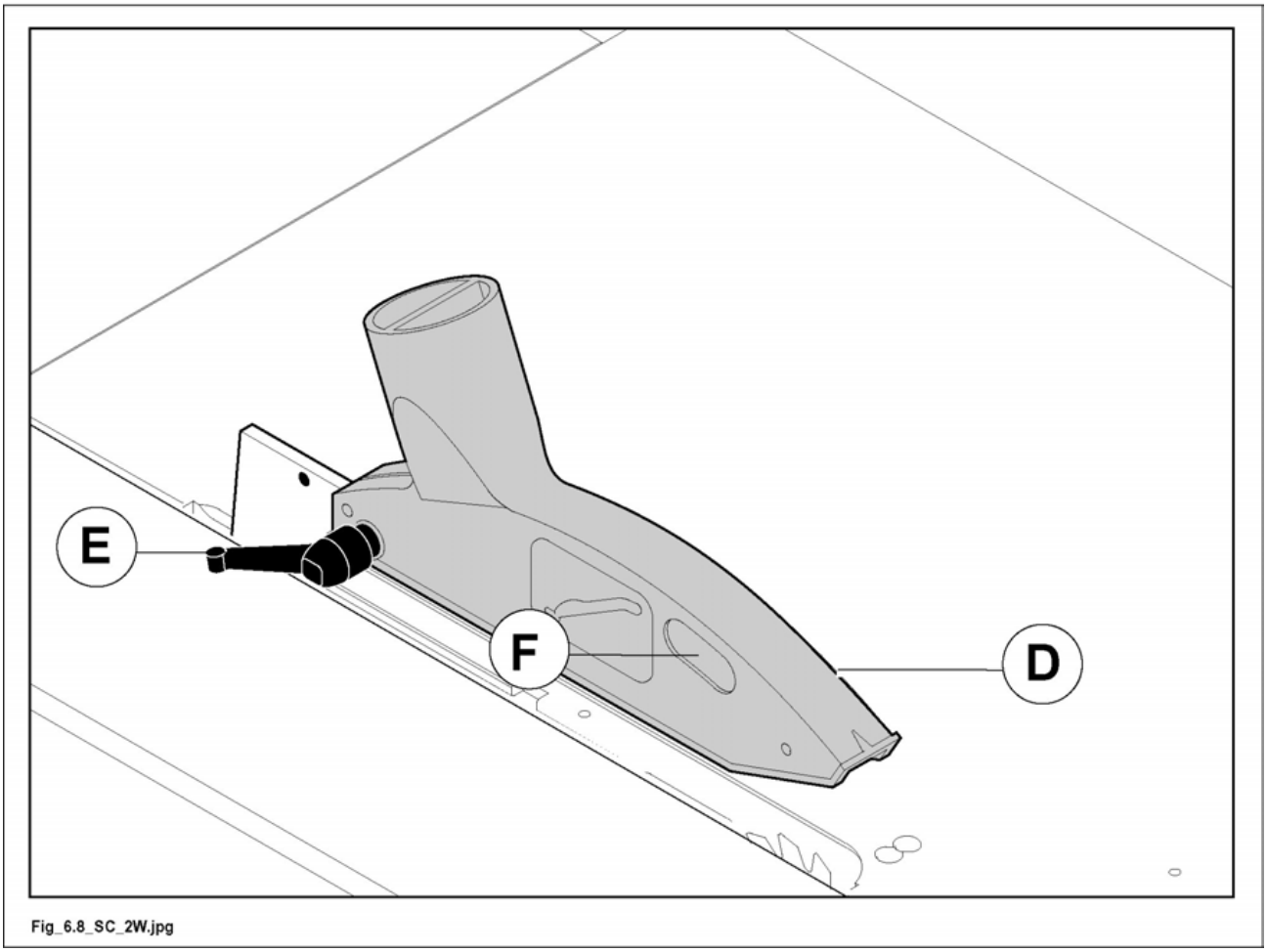

Fig. 6.8

THIS MANUAL IS PROPERTY OF SCM INDUSTRIA S.P.A - ANY TOTAL OR PARTIAL REPRODUCTION IS STRICTLY FORBIDDEN

INDEX

7.1.3 Splinter guard adjustment 2

7.4 Use of the ruler 4

7.14 Manual fence for parallel cuts 6

7.14.1 Setting to zero the fence for parallel cuts 6

7.14.2 Operation 8

7.23 Use of sliding table and frame for large panels 12

7.23.1 Aluminium sliding table 12

7.23.6 Use of the presser unit 13

7.24 Example: longitudinal cut 14

7.24.1 First cut 14

7.24.2 Second cut (squaring) 15

7.24.3 Third cut 15

7.24.4 Fourth cut 16

7.24.5 Cut for obtaining pieces with opposite sides parallel 18

7.1.3 SPLINTER GUARD ADJUSTMENT

(par_7.1.3_2010)

You can trim the splinter guard a few times (K fig. 7.1-3), without having to move the entire support rule.
Loosen the screws (V fig. 7.1-3), slide the sprinter guard (K fig. 7.1-3) towards the blade, tighten the screw and perform the trim again.
If you need to replace it see Section 20.

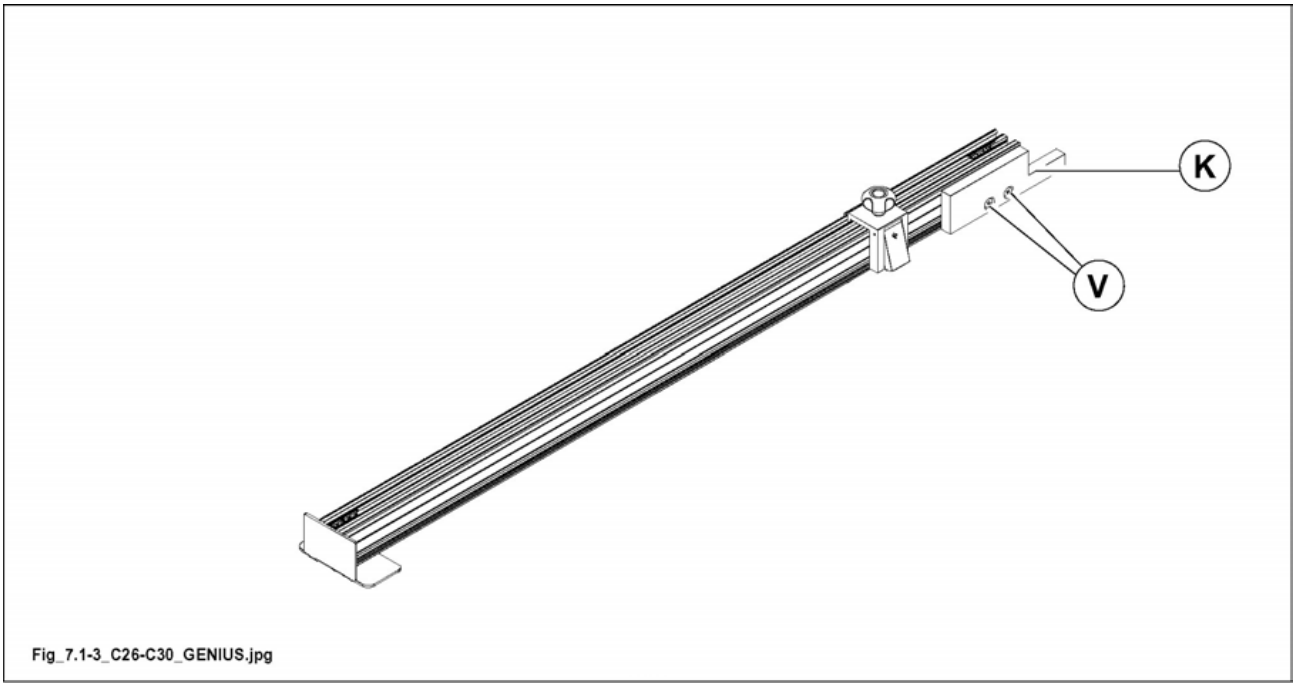

Fig. 7.1-3

 THIS MANUAL IS PROPERTY OF SCM INDUSTRIA S.P.A - ANY TOTAL OR PARTIAL REPRODUCTION IS STRICTLY FORBIDDEN

(st-8)

7.4 USE OF THE RULER

(genius_7.4_0.0)

Squaring table

- Place the ruler on the table (A fig. 7.4A), inserting the fulcrum (C fig. 7.4A) in the hole (R fig. 7.4A).
  Insert the knob (F fig. 7.4A) in the slot (T fig. 7.4A) by means of the hole (D fig. 7.4A).
  Insert the lock pin (Z fig. 7.4A) in the slot on the wagon (V fig. 7.4A) only for versions.

For 90° cuts

- Position the ruler in such a way that the pin (E fig. 7.4A) fits into place against the device (S fig. 7.4A).
- Tighten the knob (F fig. 7.4A).
- For use, position the stops (B fig. 7.4A) referring to the metric ruler (P fig. 7.4A).

For inclined cuts

- Position the rule at required angle using slot (T fig. 7.4A) and tighten knob (F fig. 7.4A).

  When the chip guard (M fig. 7.4A) is worn, bring it up to the saw blade by loosening the two screws (N fig. 7.4A).

  The rule is supplied with the stops (B fig. 7.4A). These can be positioned quickly, for support or drive machining, by sliding them out from the rule and reassembling them on the opposite side.

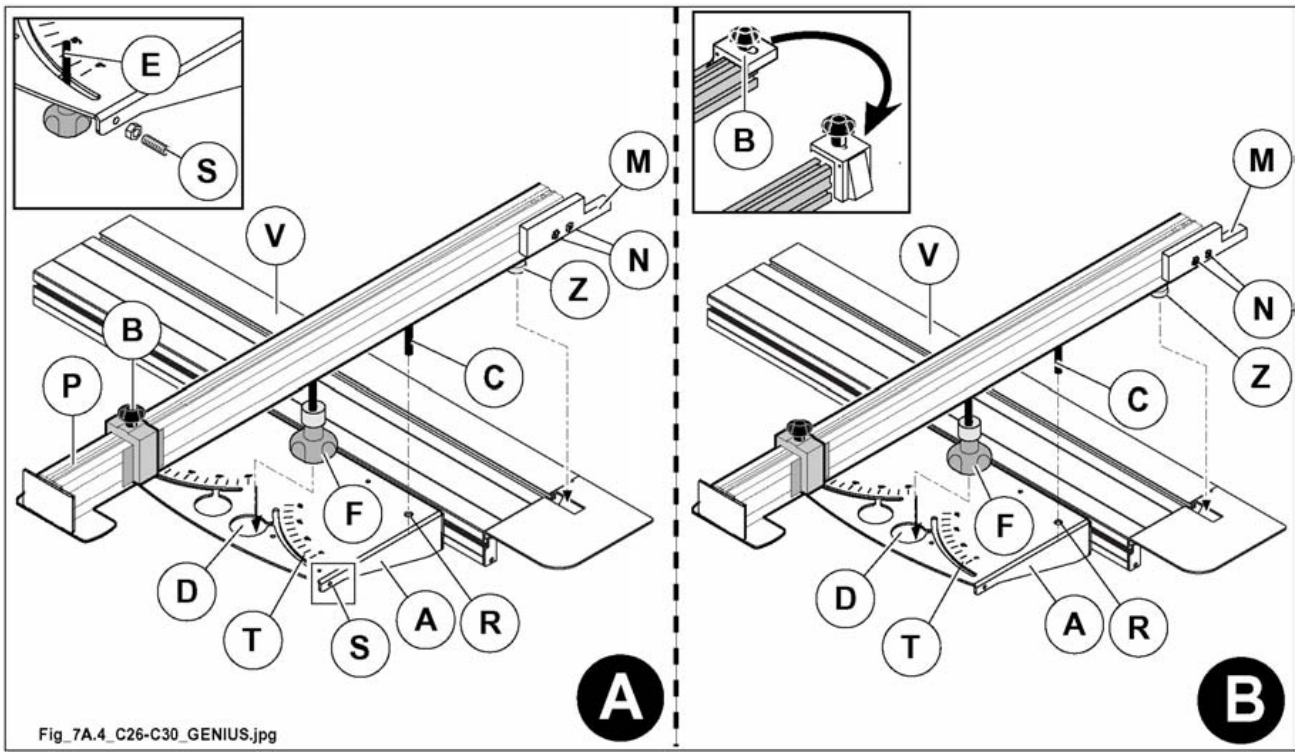

Fig. 7.4A

 THIS MANUAL IS PROPERTY OF SCM INDUSTRIA S.P.A - ANY TOTAL OR PARTIAL REPRODUCTION IS STRICTLY FORBIDDEN

Supporting frame OPT

A ***For 90° cuts***

- Position the ruler in such a way that the pin (C fig. 7.4) fits into place against the gib (L fig. 7.4). The gib (L fig. 7.4) is adjusted by our technicians and is used to rapidly position the ruler at the right distance from the saw blade (only at a 90° position).
- Position the ruler in such a way that the pin (E fig. 7.4) fits into place against the device (S fig. 7.4).
- Tighten the knob (F fig. 7.4).

B ***For inclined cuts***

- For use, position the ruler referring to the plate (P fig. 7.4).
- Tighten the knob (F fig. 7.4).

When the chip guard (M fig. 7.4) is worn, bring it up to the saw blade by loosening the two screws (N fig. 7.4).

The rule is supplied with the stops (B fig. 7.4). These can be positioned quickly, for support or drive machining, by sliding them out from the rule and reassembling them on the opposite side.

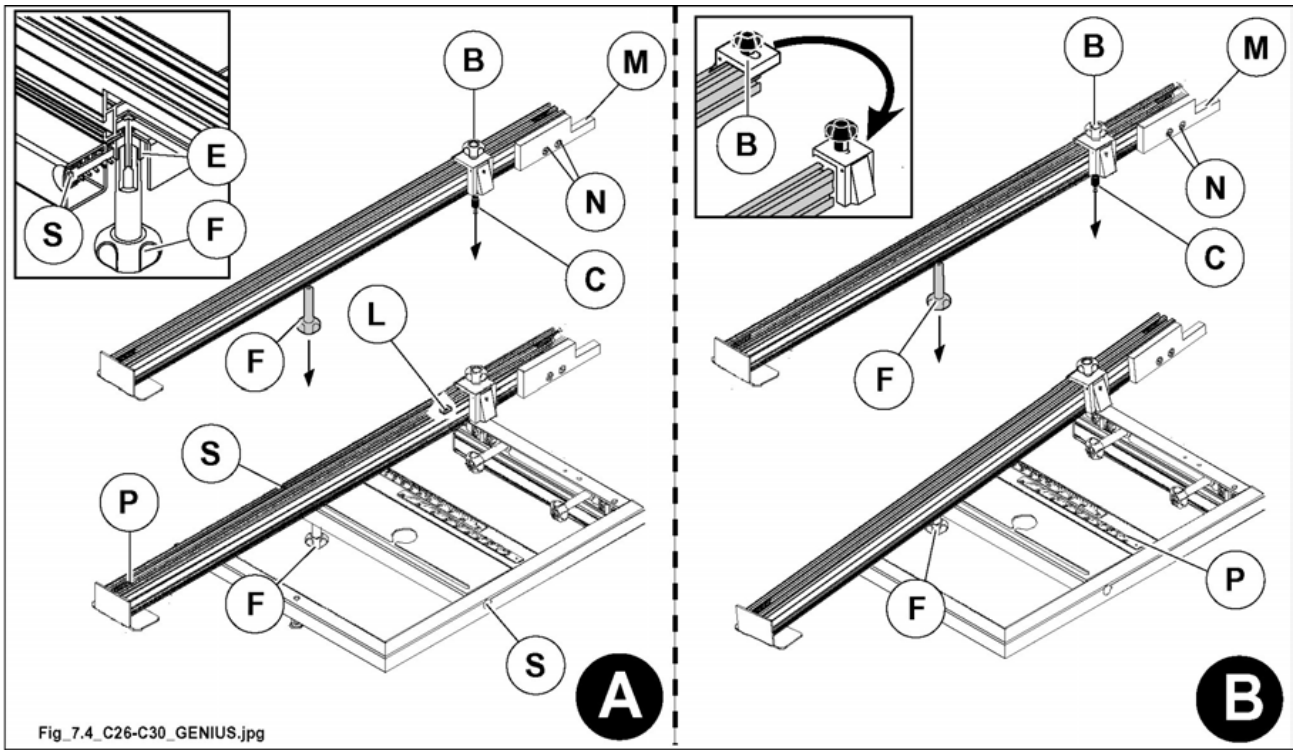

Fig. 7.4

7.14 MANUAL FENCE FOR PARALLEL CUTS

(gu_7-14_0.0)

7.14.1 SETTING TO ZERO THE FENCE FOR PARALLEL CUTS

(gu_7-14-1_0.0)

1) With motors off lift the saw guard.
2) Unlock the fence for parallel cuts (D fig. 7.14-1) by means of handle (L fig. 7.14-1) and move it in order to read a value (e.g. X=200 mm) between the edge (R fig. 7.14-1) turned to the blade and millimeter rule (N fig. 7.14-1).
3) Measure the distance between saw blade and parallel fence.
4) If necessary, adjust the position by loosening the fastening screws (A fig. 7.14-1) and repositioning the tubular section (P fig. 7.14-1) in order to read the same value previously measured on the edge (R fig. 7.14-1) of fence.
5) Lock the fence unit with handle (L fig. 7.14-1).
   Lower the guard and carry out a test cut.

 THIS MANUAL IS PROPERTY OF SCM INDUSTRIA S.P.A - ANY TOTAL OR PARTIAL REPRODUCTION IS STRICTLY FORBIDDEN

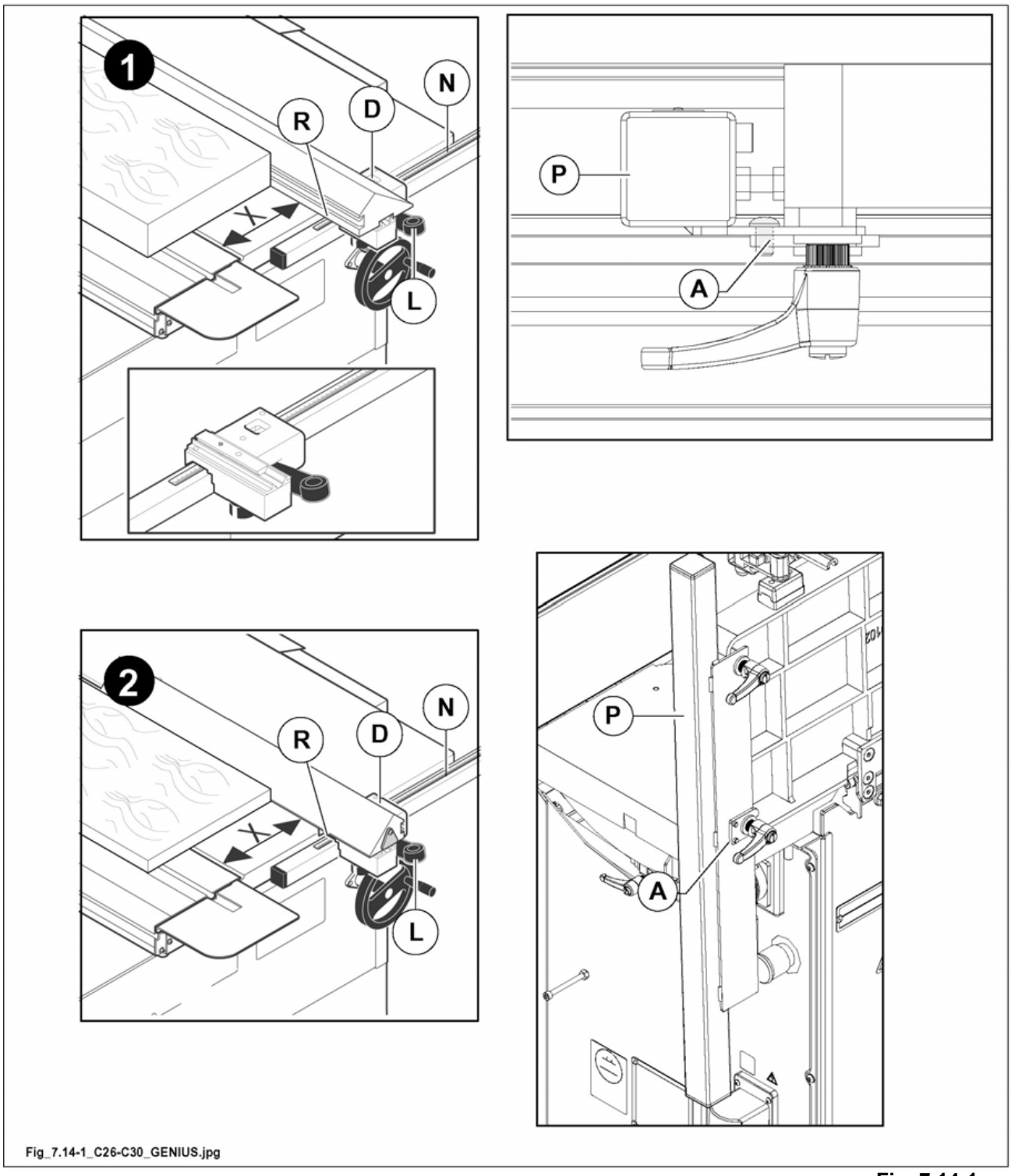

Fig. 7.14-1

7.14.2 OPERATION

(gu_7-14-2_0.0)

It is used for parallel cuts with cutting width up to 500 mm (C 26), 550 mm (C 30).

Rule (R fig. 7.14-2) can move in longitudinal direction after unlocking lever (P fig. 7.14-2); after every adjustment tighten lever (P fig. 7.14-2).
The parallel rule shall be adjusted in longitudinal direction, so that the workpiece can not lock between rule and riving knife.

DANGER-WARNING:
the front end of the line must never protrude from the floor at the end (F fig. 7.14.2), but must arrive at an imaginary line (G fig. 7.14.2) that starts from the first tooth of the blade and slide forward to 45°. This is to prevent the ascent saw teeth to grab the piece and cast against the operator.

Positions of rule (R fig. 7.14-2) after loosening lever (P fig. 7.14-2).

1) Vertical position with side (W fig. 7.14-2) turned to the workpiece.
2) Horizontal position (O fig. 7.14-2) for cutting thin pieces and slanting cuts.

DANGER-WARNING:
it is possible to move the piece forwards by using pusher (H fig. 7.14-2) supplied with the machine.

3) After carrying out every adjusting operation tighten lever (P fig. 7.14-2).

To increase or decrease the distance between the fence and the saw blade operate as indicated below.
- Loosen handle (D fig. 7.14-2);
- manually slide the fence unit with reference to the metric ruler (E fig. 7.14-2) through the opening (C fig. 7.14-2) of the support;
- block handle (D fig. 7.14-2).

To set the cutting width, refer to the metric ruler (E fig. 7.14-2) in correspondence to the arrows (M fig. 7.14-2) or (N fig. 7.14-2) of the index (Z fig. 7.14-2). Select the reference (M fig. 7.14-2) or (N fig. 7.14-2) on the basis of the position of the fence (O or W fig. 7.14-2).

DANGER-WARNING:
before starting machining, make sure that the guard is resting on the workpiece.

NOTE-INFORMATION:
for cutting large panels, position the slider (B fig. 7.14-2) again, proceeding as follows:

- remove fence (R fig. 7.14-2) together with relative bracket.
- Remove bracket (B fig. 7.14-2).
- Release the lever (L fig. 7.14-2) and turn over the protection (Q fig. 7.14-2) by 180°.
- Reinstall bracket (B fig. 7.14-2).
- Reinstall fence (R fig. 7.14-2) together with relative bracket.

THIS MANUAL IS PROPERTY OF SCM INDUSTRIA S.P.A - ANY TOTAL OR PARTIAL REPRODUCTION IS STRICTLY FORBIDDEN

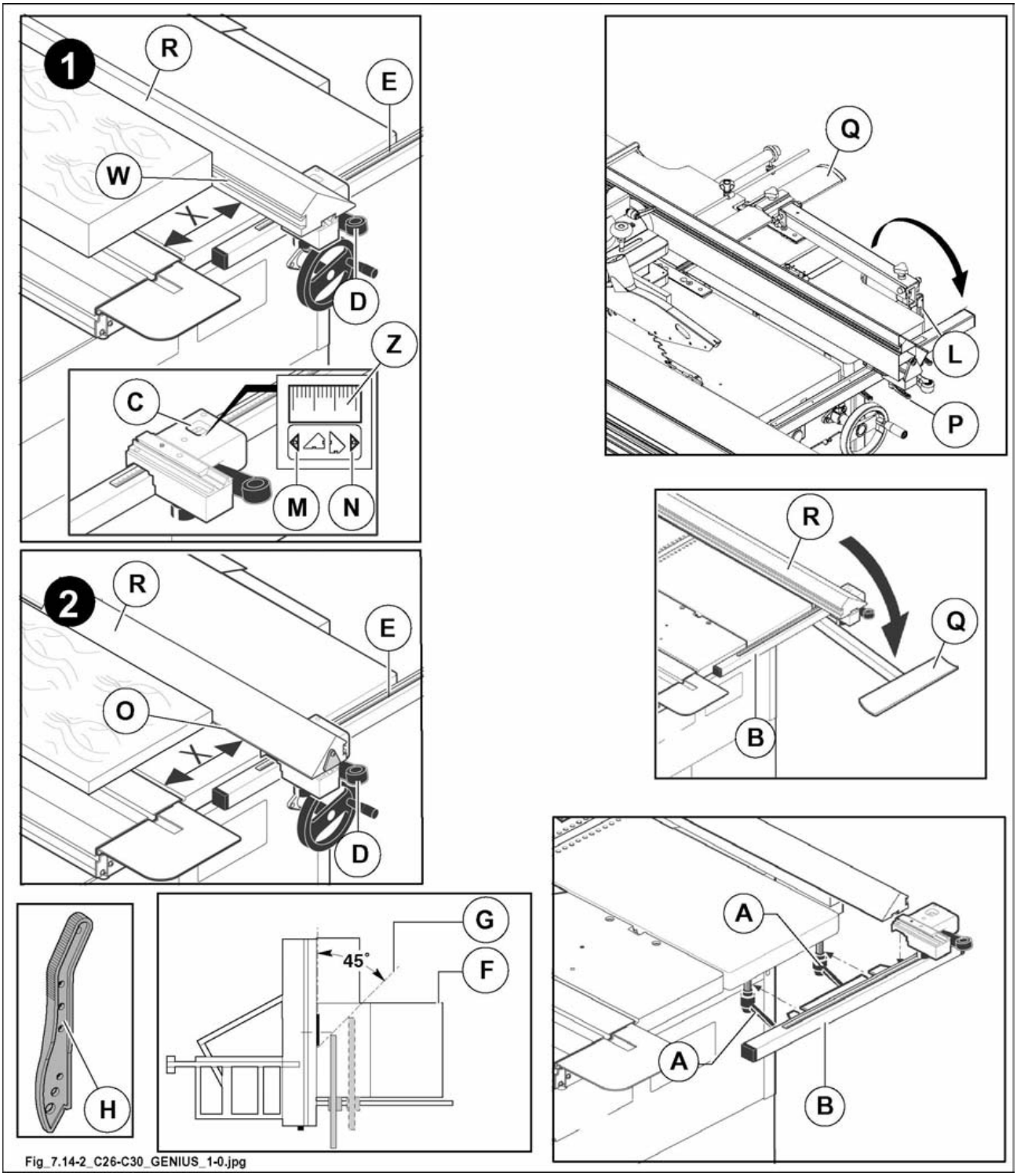
1
R
E
W
X
D
Z
C
M
N
Q
L
P
2
R
E
O
X
D
R
Q
B
A
A
B
H
G
F
45°
Fig_7.14-2_C26-C30_GENIUS_1-0.jpg

Fig. 7.14-2

DANGER-WARNING:
when for the execution of a peculiar working, the operator is obliged to put his hands near the tools, for safety reasons a proper pusher shall be used to move the workpiece forwards, to push it against the fence or to remove it after the cutting (see Chap.15).

USING THE PUSHERS

DANGER-WARNING:
before starting to work, ensure that the guard (D fig. 7.14-2A) is resting against the workpiece and, at the end of the operations, lower it until it comes into contact with the table.
To avoid getting too close to the blades with your hands, use the pusher (H fig. 7.14-2A) supplied with the machine.
After using this device return to its seating.

When you have to cut small workpieces and you have to push against the fence, you must use the pushers supplied with the machine.
The handle (A fig. 7.14-2A) is supplied as part of the equipment; it can be applied to pushers of various dimensions (see Section15).

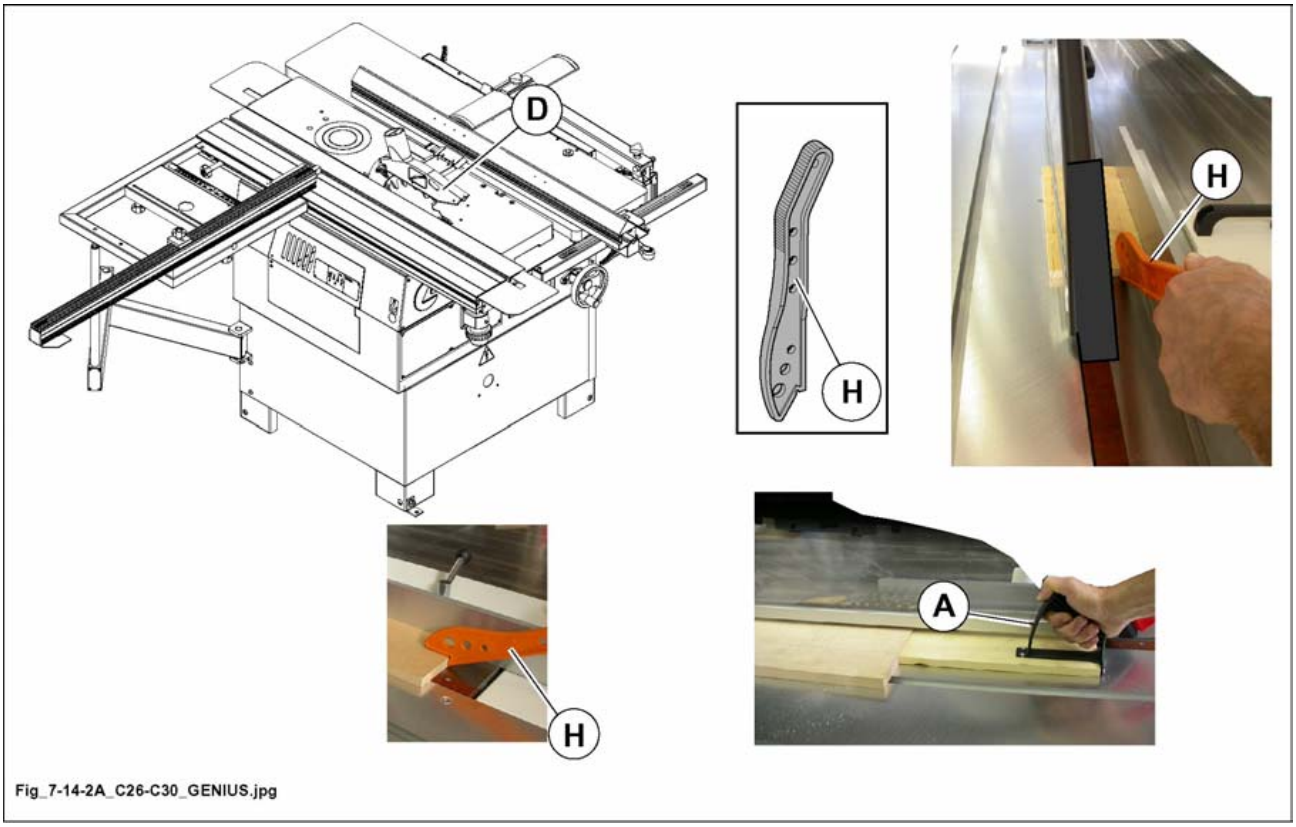

Fig. 7.14-2A

 THIS MANUAL IS PROPERTY OF SCM INDUSTRIA S.P.A - ANY TOTAL OR PARTIAL REPRODUCTION IS STRICTLY FORBIDDEN

(st_7-2)

7.23 USE OF SLIDING TABLE AND FRAME FOR LARGE PANELS

(ev_7-23_0.0)

7.23.1 ALUMINIUM SLIDING TABLE

(ev_7-23-1_0.0)

The aluminium sliding table moves on high precision slideways made of hardened steel in order to ensure the uniform and smooth motion with small friction, necessary for obtaining precise cuts.

The sliding table is locked and unlocked by means of lever (A fig. 7.23-1):

- the lever (A fig. 7.23-1) is used to lock the wagon in the rest position (wagon closed).

Fasten the following devices:

- fit gib of column (D fig. 7.23-1) into groove of sliding table, fit arm (E fig. 7.23-1) to the column, then tighten handle (F fig. 7.23-1).
- Fit tile-shaped stop (G fig. 7.23-1) by inserting the gib into the groove of sliding table, hen tighten handle (H fig. 7.23-1).

The structure of device (G fig. 7.23-1) permits to perform precision stops also in pieces having an irregular stop surface.

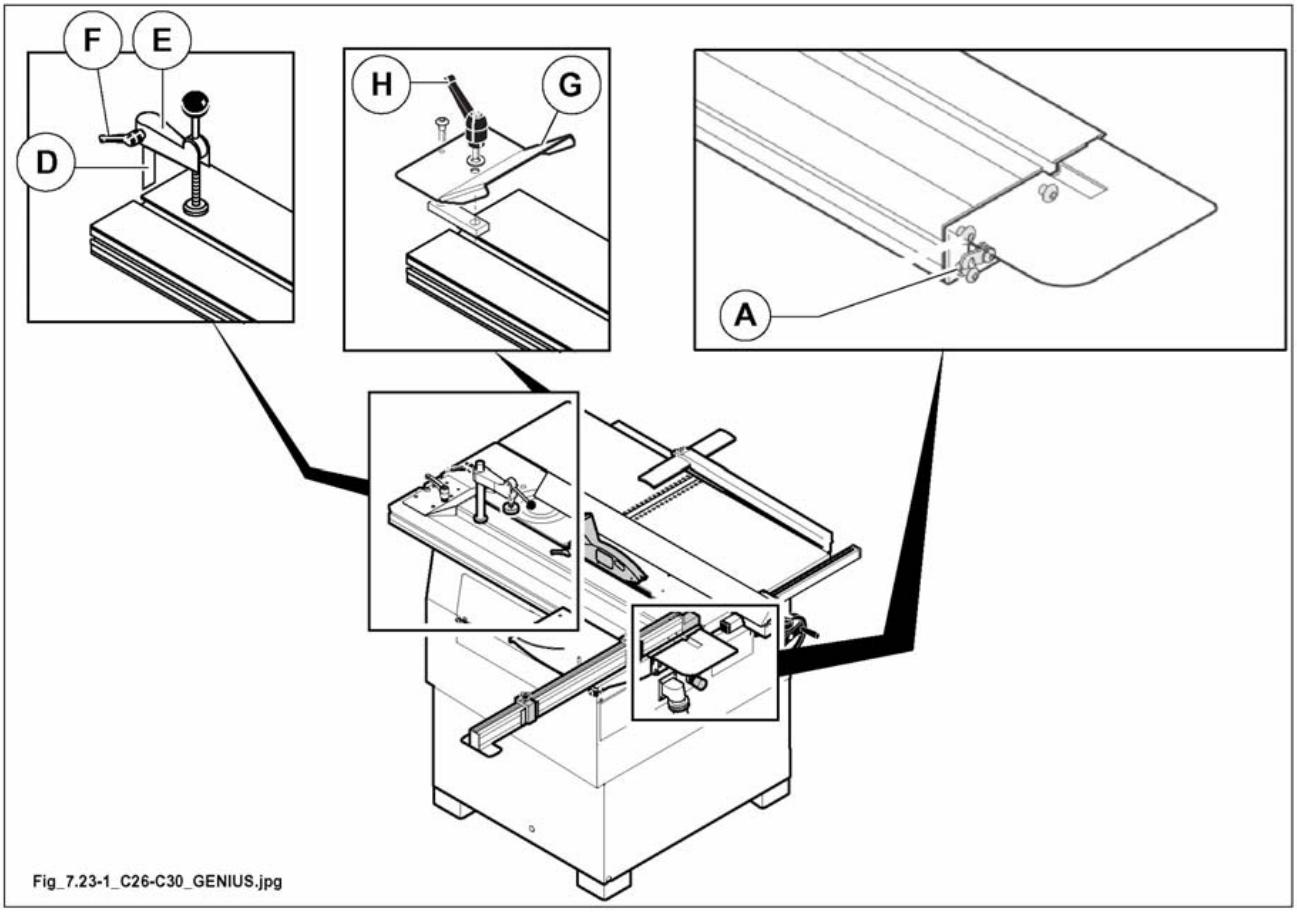

Fig. 7.23-1

 THIS MANUAL IS PROPERTY OF SCM INDUSTRIA S.P.A - ANY TOTAL OR PARTIAL REPRODUCTION IS STRICTLY FORBIDDEN

7.23.6 USE OF THE PRESSER UNIT

(ev_7-23-6_0.0)

DANGER-WARNING:
to ensure a strong panel clamping, the foot shall be at a 1 mm height from the panel surface before lowering the lever.

- By means of lever (H fig. 7.23-6) lower foot (L fig. 7.23-6) for clamping the piece.

Wood stop unit
- Move stop (G fig. 7.23-6) to the required position;
- Tighten handle (A fig. 7.23-6) hard after adjustment.

NOTE-INFORMATION:
the structure of device (G fig. 7.23-6) permits to perform precision stops also in pieces having an irregular stop surface.

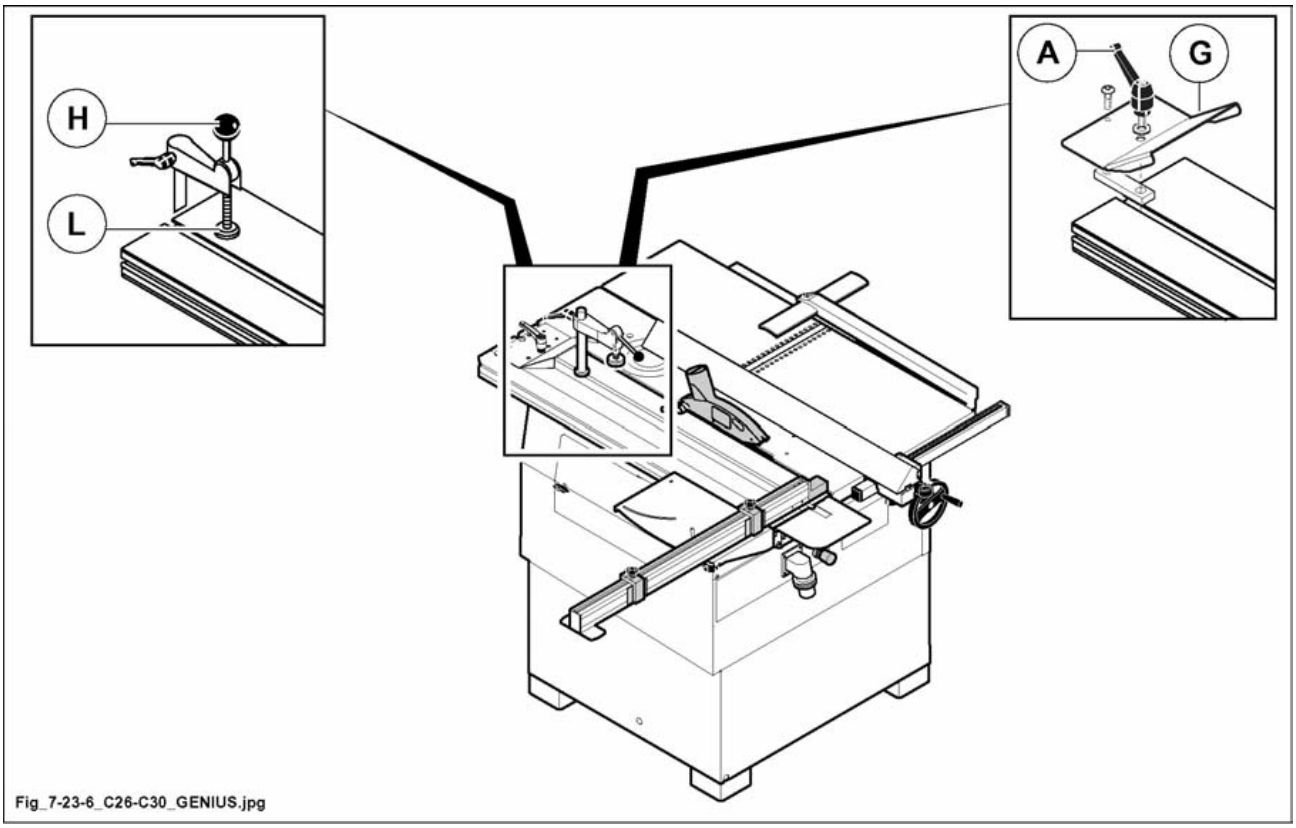

Fig. 7.23-6

7.24 EXAMPLE: LONGITUDINAL CUT

(ev_7-24_0.0)

CAUTION:
when working with the saw completely close the router hole using the rings provided. After finishing work, completely lower the saw protection resting on the table.

The choice of the method to use to make a cut with the circular saw depends on the dimensions of the wood to be machined and the type of machining to be carried out.

DANGER-WARNING:
always secure the workpiece by means of the presser when a sliding wagon is used.
Always use supports when machining panels having great dimensions.

7.24.1 FIRST CUT

(ev_7-24-1_0.0)

When machining large panels, position the ruler and the squaring frame for thrust machining (see fig. 7.24-1); with this position maximum cutting length is obtained.

- Rest the panel on the sliding table and frame see fig. 7.24-1.
- Loosen handle (F fig. 7.24-1) and move the tile-shaped stop (D fig. 7.24-1) into the groove and rest it against the panel.
- Clamp the handle (F fig. 7.24-1).
- Move clamping device (E fig. 7.24-1) close to the panel.

DANGER-WARNING:
When loading the piece onto the wagon, take care not to knock the saw blade.

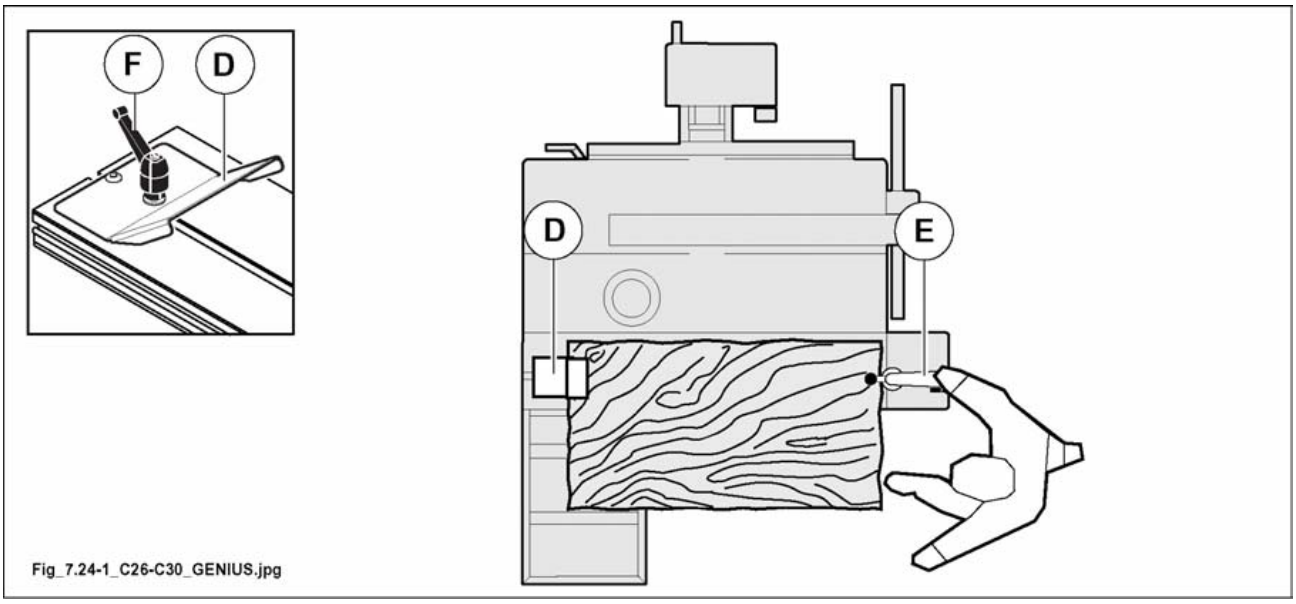

Fig. 7.24-1

THIS MANUAL IS PROPERTY OF SCM INDUSTRIA S.P.A - ANY TOTAL OR PARTIAL REPRODUCTION IS STRICTLY FORBIDDEN

7.24.2 SECOND CUT (SQUARING)

(ev_7-24-2_0.0)

- Move the sliding table to the end of stroke (see fig. 7.24-2), lock lever (L fig. 7.24-2).
- Turn the panel 90°. Rest the trimmed side (A fig. 7.24-2) against aluminium rule; lock the panel with clamping device (G fig. 7.24-2) then carry out cut (B fig. 7.24-2).

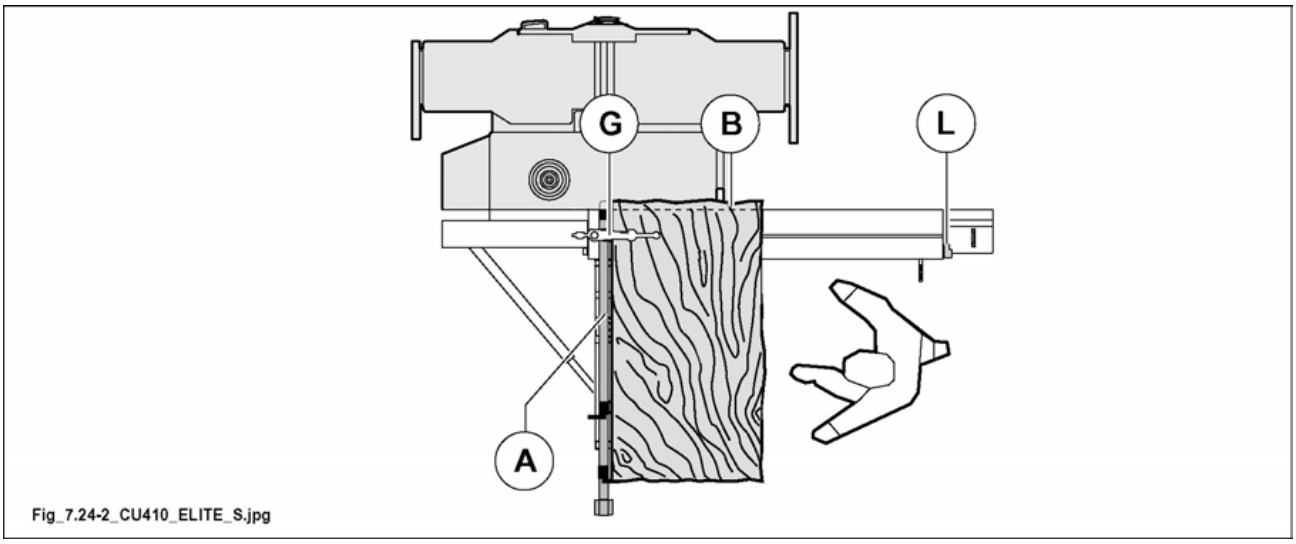

Fig. 7.24-2

7.24.3 THIRD CUT

(ev_7-24-3_0.0)

- Move the sliding table to the end of stroke (see fig. 7.24-3), lock lever (L fig. 7.24-3).
- Turn the panel 90° again. Rest side (B fig. 7.24-3) against aluminium rule and trimmed side (A fig. 7.24-3) against stop (T fig. 7.24-3) set to the cutting measure; lock the panel with clamping device (G fig. 7.24-3) carry out cut (C fig. 7.24-3).

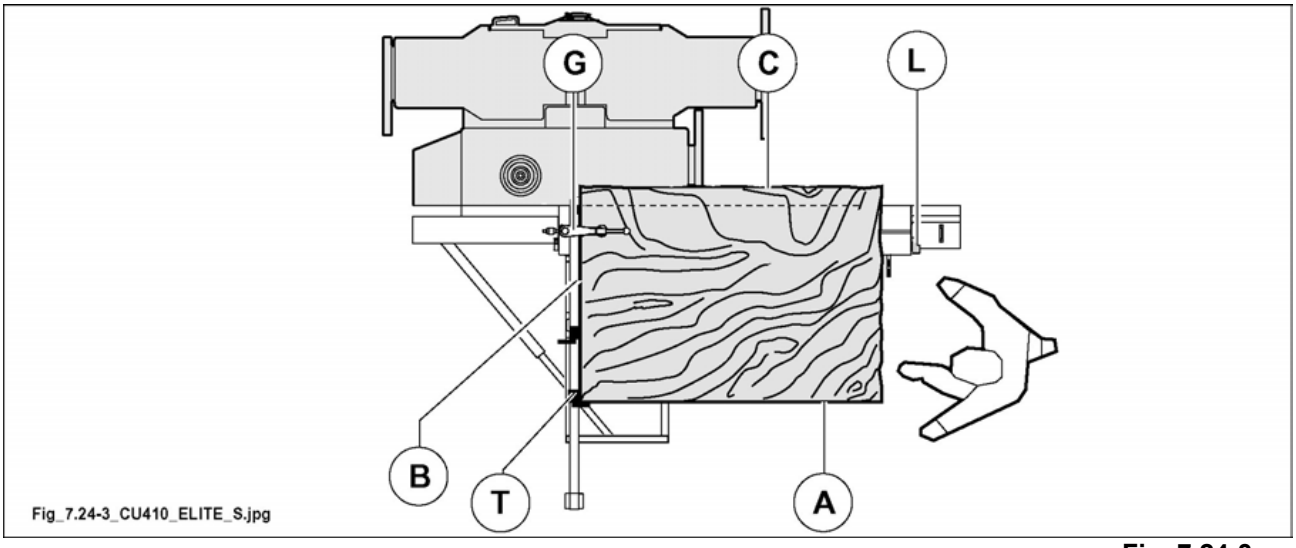

Fig. 7.24-3

7.24.4 FOURTH CUT

(ev_7-24-4_0.0)

- Move the sliding table to the end of stroke (see fig. 7.24-4), lock lever (L fig. 7.24-4).
- Turn panel 90° again. Rest side (C fig. 7.24-4) against aluminium rule and side (B fig. 7.24-4) to stop (T fig. 7.24-4) set to the cutting measure required; lock the panel with clamping device (G fig. 7.24-4) then carry out cut (D fig. 7.24-4).

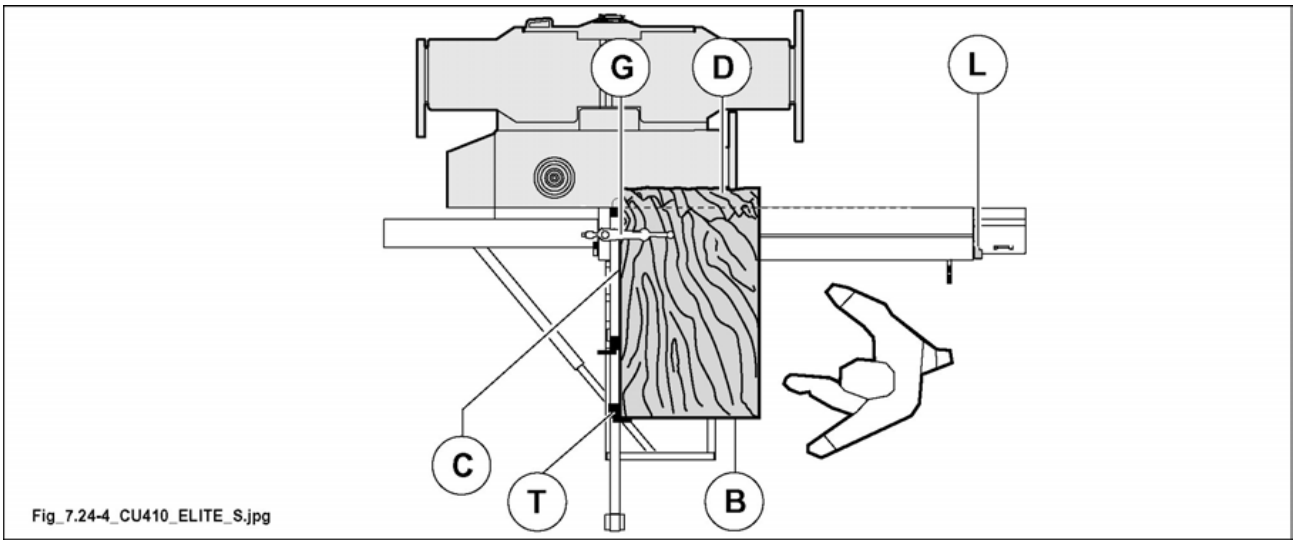

Fig. 7.24-4

NOTE-INFORMATION:
to cut smaller panels it is easier to work with the ruler positioned for bearing machining (see fig. 7.24-4A).

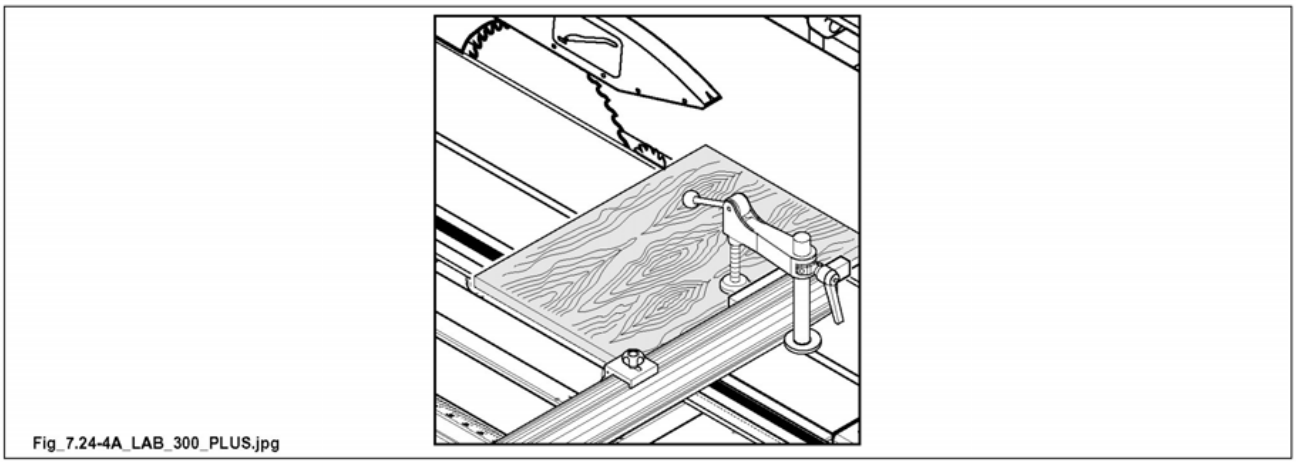

Fig. 7.24-4A

THIS MANUAL IS PROPERTY OF SCM INDUSTRIA S.P.A - ANY TOTAL OR PARTIAL REPRODUCTION IS STRICTLY FORBIDDEN

NOTE-INFORMATION:
when the dimension of the panel allows, it is better to carry out the first two cuts at tenoner (Par. 7.24.1 - 7.24.2) and cut the other sides with the parallel guide (L fig. 7.24-4B).

When cutting smaller panels it is easier to work with the squaring fence as shown in the diagram (see fig. 7.24-4B).
For cuts that slope in relation to the carriage stroke, position the squaring fence (D fig. 7.24-4B) or (E fig. 7.24-4B) at the angle of the inclination required using gauge (G fig. 7.24-4B) or (H fig. 7.24-4B) as a reference.

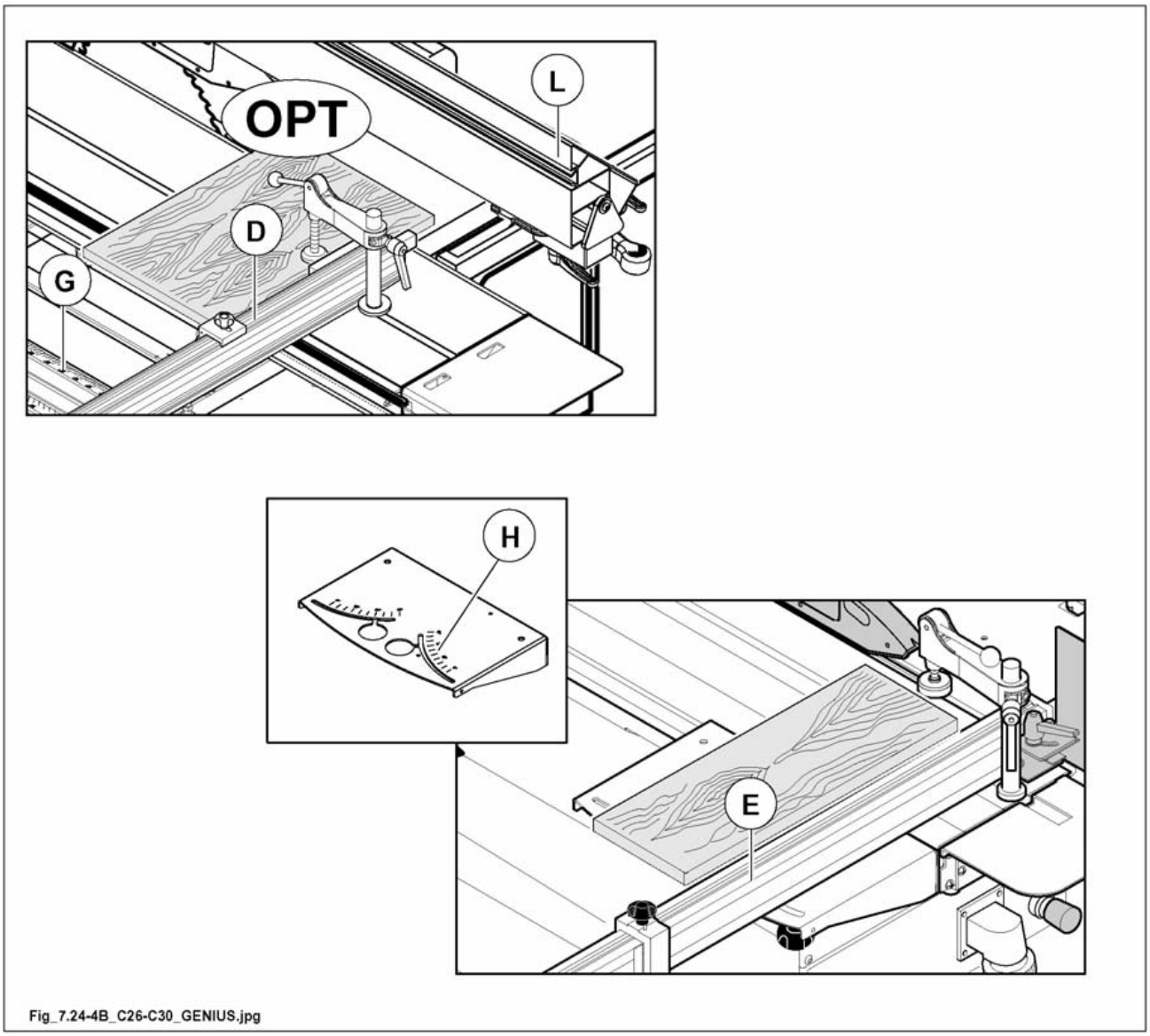

Fig. 7.24-4B

7.24.5 CUT FOR OBTAINING PIECES WITH OPPOSITE SIDES PARALLEL

(ev_7-24-5_0.0)

To perform parallel cuts use fence (A fig. 7.24-5). To position and adjust, follow the instructions in Par. 7.14.2.
Position the wagon carriage and lock it with lever (B fig. 7.24-5).
For positioning the workpiece against fence (A fig. 7.24-5) refer to scale (C fig. 7.24-5).
Read the measurements using the opening (D fig. 7.24-5).

- Carry out the trimming cut (S fig. 7.24-5) as in the previuos way (first cut).
- Then carry out the parallel cut (M fig. 7.24-5) by resting trimmed side (S fig. 7.24-5) against aluminium rule of the saw carriage for parallel cut set to the measure required.
- Turn the panel 90° by resting trimmed side (M fig. 7.24-5) against rule; see fig. 7.24-5.
- Lock the panel by clamping device (G fig. 7.24-5) and carry out the third cut (N fig. 7.24-5).
- Turn the panel 180° by setting stop (F fig. 7.24-5) against trimmed side (N fig. 7.24-5) at the measure required.
- After locking the panel with clamping device (G fig. 7.24-5) carry out the last cut.

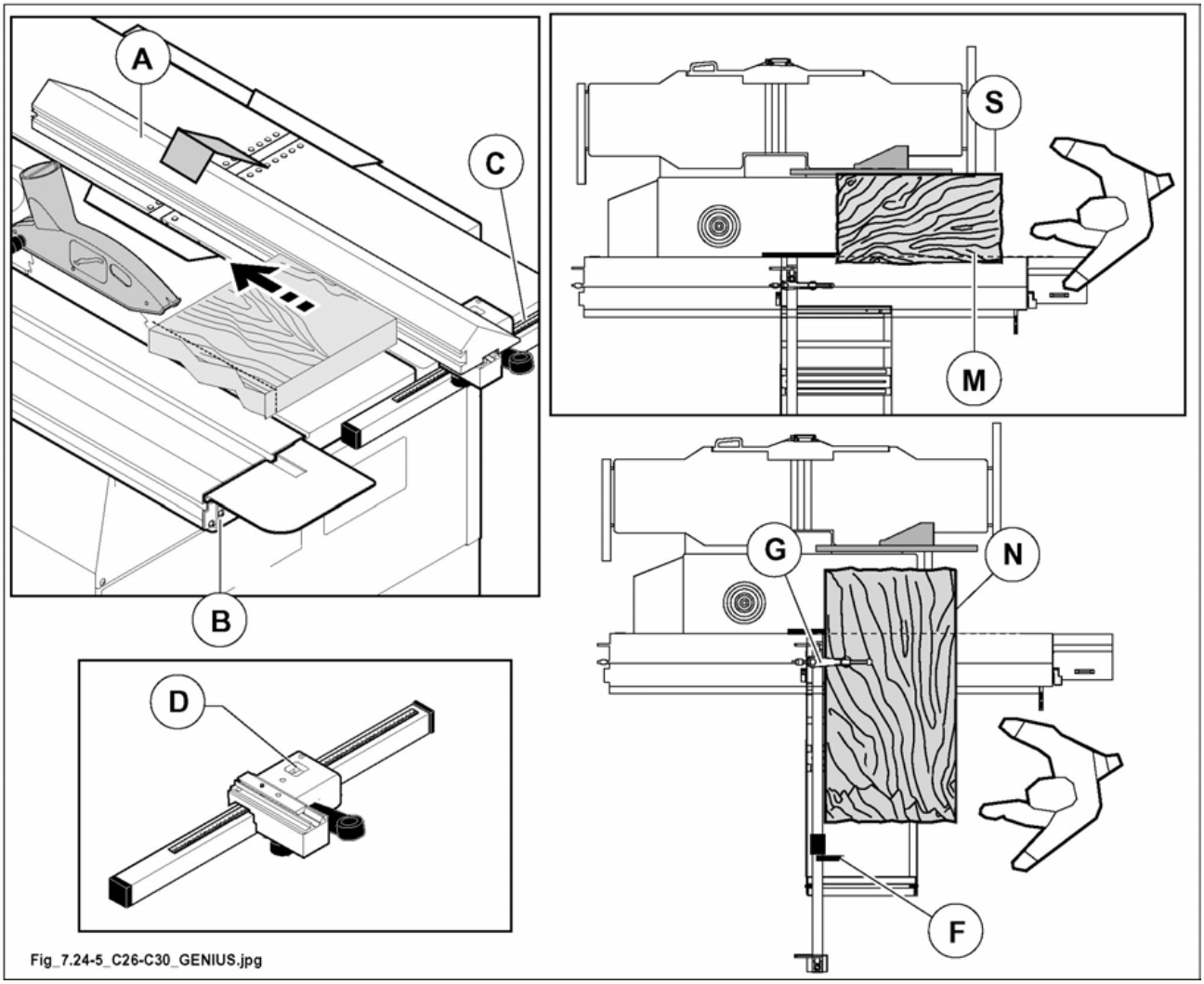

Fig. 7.24-5

 THIS MANUAL IS PROPERTY OF SCM INDUSTRIA S.P.A - ANY TOTAL OR PARTIAL REPRODUCTION IS STRICTLY FORBIDDEN

DANGER-WARNING:
the front end of the line must never protrude from the floor at the end (F fig. 7.24-5A), but must arrive at an imaginary line (G fig. 7.24-5A) that starts from the first tooth of the blade and slide forward to 45°. This is to prevent the ascent saw teeth to grab the piece and cast against the operator.

DANGER-WARNING:
never put the hands near the saw blade; always use a pusher.

The machine is supplied with a pusher (R fig. 7.24-5A) and with a knob (B fig. 7.24-5A). The knob (B fig. 7.24-5A) may be applied to pushers of different size, screwing it on with the screws provided.
Depending on the dimensions of the piece to be machined, select the most suitable type of pusher.

A Use for tall and narrow pieces.

B Use for short and narrow pieces.

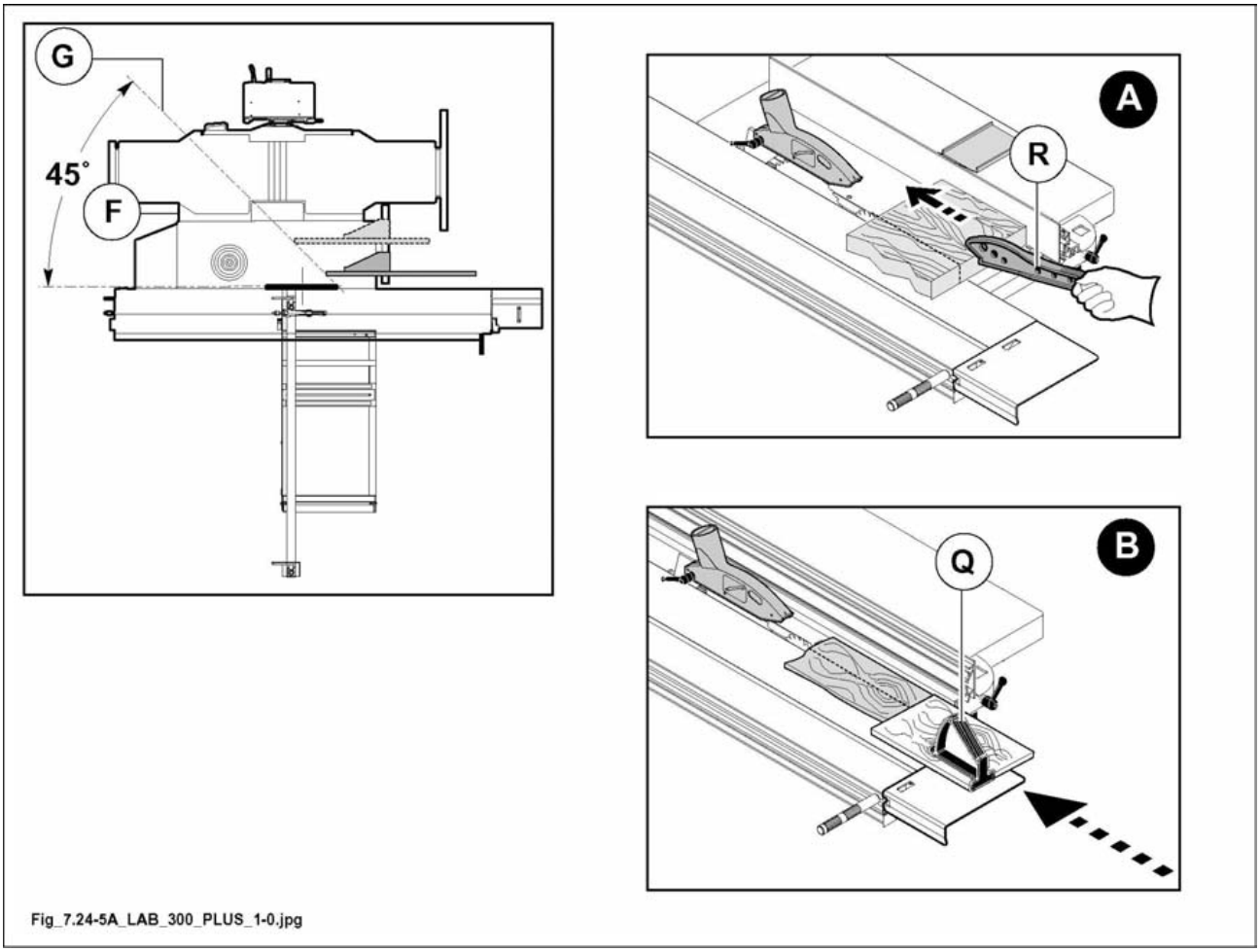

Fig. 7.24-5A

INDEX

7A.1 Knife adjustment 2

7A.2 Knife replacing 5

7A.4 Replacing the throw-away knives 6

7A.5 Helicoidal planer - Tips replacement 8

7A.6 Surfacing tables adjusting 10

7A.6.1 Inlet table 10

7A.6.2 Outlet table 11

7A.8 Fence 12

7A.8.1 Longitudinal shifting 12

7A.8.2 Tilting 12

7A.1 KNIFE ADJUSTMENT

(fs_7-1_0.0)

DANGER-WARNING:
all adjusting operations are to be carried out with standstill spindle.

DANGER-WARNING:
before carrying out any of the operations make sure to cut the main electric power and disconnect socket T from plug S.

DANGER-WARNING
to handle the knives and the cutterblock you shall wear safety gloves.
Exclusively mount knives of the same series (with the same height) to prevent unbalancing. Minimum permitted height: 18 mm.

NOTE-INFORMATION:
for safety reasons the blades are completely inserted in the cutter block; before machining adjust them in accordance with the instructions below.

For adjusting the knife projection proceed as follows:

1) Remove the nuts that block screws (A fig.7.1) and position blade adjusters (F fig.7.1) as indicated in the figure.

NOTE-INFORMATION:
plug (B fig. 7.1) must be inserted in the appropriate hole in the shaft. Tighten the two screws (A fig. 7.1) in the relative holes on the planer table.

2) Loosen the blocking screws using the specific key (C fig.7.1); the blade comes out pushed by the contrast springs.
   If necessary, replace the blades by inserting them in their specific slot (D fig.7.1) ensuring that the cutting edge meets the direction of rotation of the planer (E fig.7.1).
3) Make sure springs are in good working order by exerting a light pressure on cutters: these should go deeper into their seats and then go back to their initial position.
4) Make sure cutters and wedges are centered in relation to cutterblock (E fig.7.1).

NOTE-INFORMATION:
to ensure adjustments are correct the whole length of the knife blade should rest on the knife register (F fig. 7.1). In this way proper projection of the knife from the planer spindle is guaranteed (1 mm).

5) Tighten the locking screws using the special wrench (C fig. 7.1) and exerting pressure on the cutter adjuster.

In the same way mount all the knives.
When the operation has been completed, set up the machine for buzz planing or thicknessing following the instructions in Chapters 7A and 9.

 THIS MANUAL IS PROPERTY OF SCM INDUSTRIA S.P.A - ANY TOTAL OR PARTIAL REPRODUCTION IS STRICTLY FORBIDDEN

6) Take off the knife setting gauge.

After the adjusting all knives must be at the same height of the outlet table.
To check the knife adjusting rest a wood ledge on the outlet table first on the right side then on the left side, then manually turn the cutterblock: the knives shall lightly touch the wood ledge uniformly.

DANGER-WARNING
the knife grinding is permitted up to a min. width of 18 mm (fig. 7.1). When this value has been reached, replace the knife;
knife projection from the cutterblock: 1 mm.

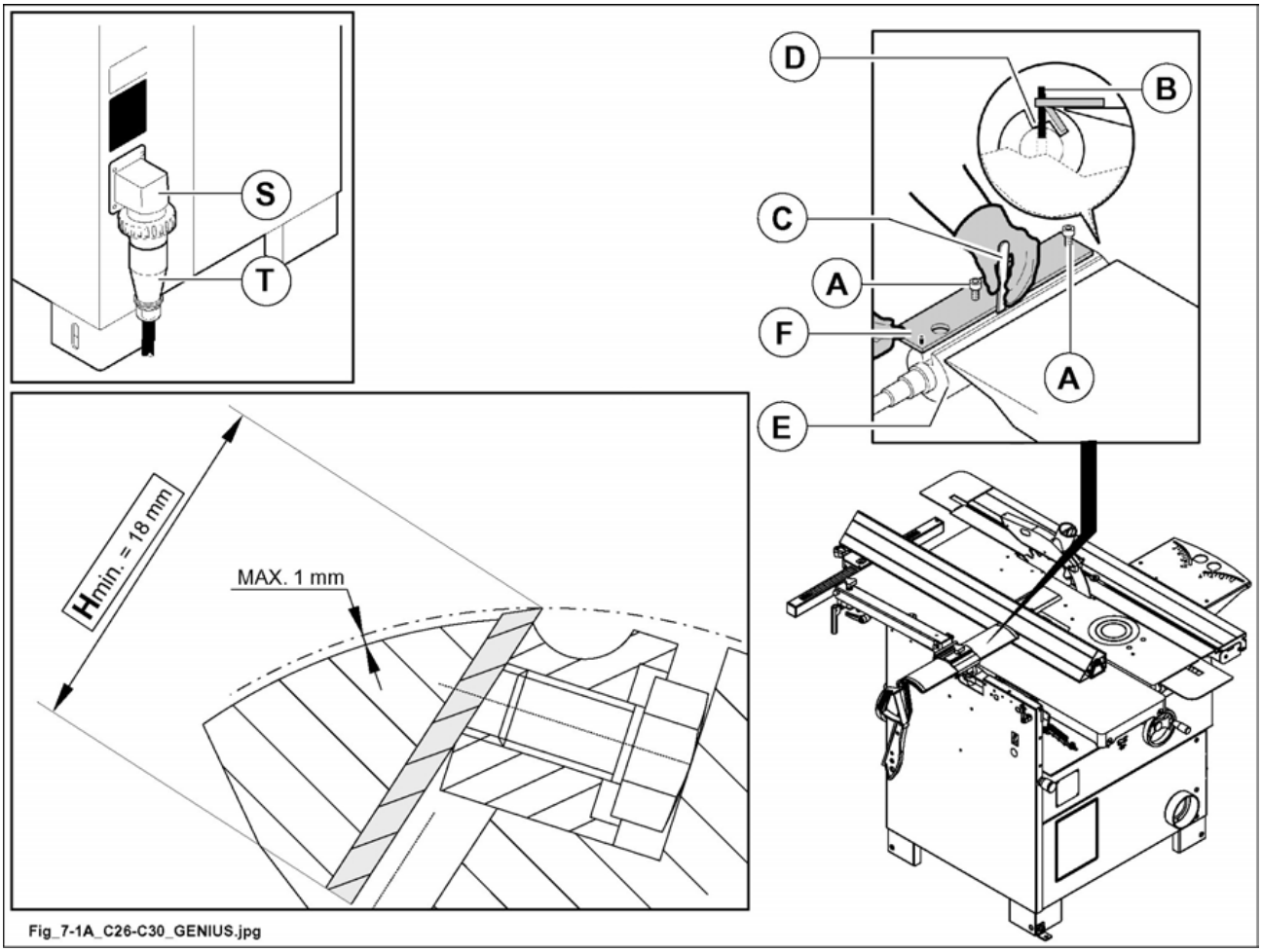

Fig. 7.1

If the knives are well adjusted, the finished workpieces are not convex without the step at their rear end.

NOTE-INFORMATION:
to achieve a quality finish the THICKNESSER MUST BE PERFORMED immediately after the SURFACE PLANER.

To wear the knives uniformly, and thus improve the quality of the work and reduce the maintenance times and costs, it is GOOD PRACTICE to use the knives along the whole length of the cut!
If planing a narrow workpiece, feeding it on the external side (1) of the planer, in the subsequent thicknessing the workpiece must be positioned in order to use the section of knives (2) that was not used in the previous operation.
When working large workpieces it is always GOOD PRACTICE to position the centre line of the workpiece on the centre line of the planer!

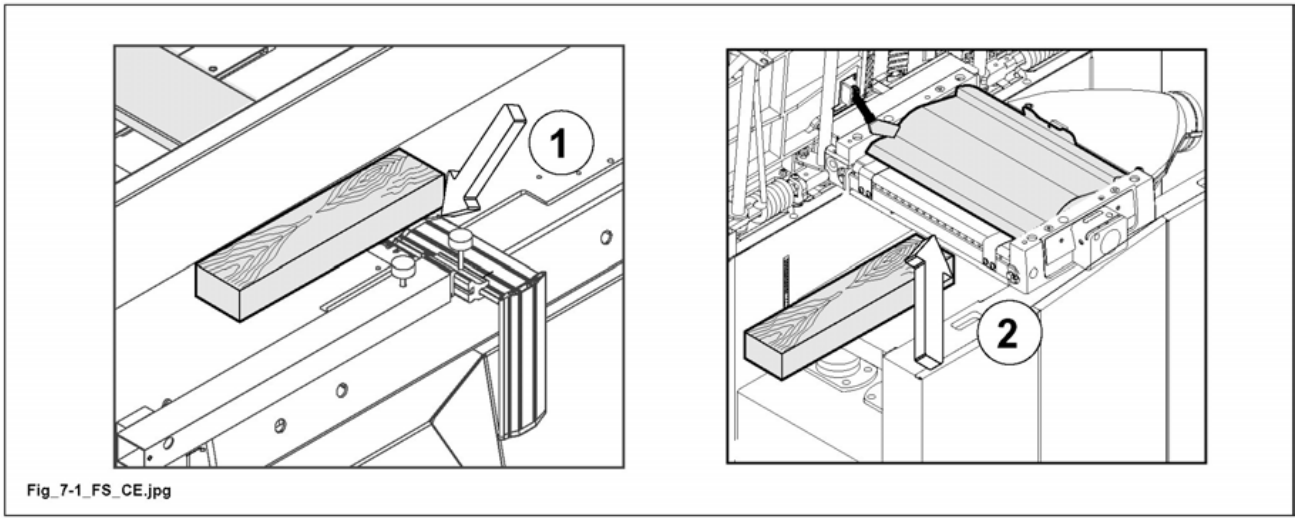

Fig_7-1_FS_CE.jpg

IMPORTANT

Keep the knives and gibs always clean to ensure the best performance of the machine.
Remove resin residues, sawings and chips with a hard bristle brush and terpentine, kerosene or light oil.
Never use other different product or synthetic solvents.
Remove dirty then dry each part.
Clean the worktable with a dry cloth.

 THIS MANUAL IS PROPERTY OF SCM INDUSTRIA S.P.A - ANY TOTAL OR PARTIAL REPRODUCTION IS STRICTLY FORBIDDEN

7A.2 KNIFE REPLACING

(fs_7-2_0.0)

DANGER-WARNING
to handle the knives and the cutterblock you shall wear safety gloves.

The knives supplied with the machine MUST be SHARPENED before they are assembled on the planer.

Exclusively mount knives of the same series (with the same height) to prevent unbalancing. Minimum permitted height: 18 mm.
All the knives must be replaced together, even if only one of them is faulty or worn.

DANGER-WARNING
do not start the cutterblock motor when the knives are not fitted.

NOTE-INFORMATION:
for replacement the knife projection see Par. 7A.1.

7A.4 REPLACING THE THROW-AWAY KNIVES

(fs_7-4_0.0)

OPT

DANGER-WARNING:
all adjusting operations are to be carried out with standstill spindle.

DANGER-WARNING:
before carrying out any of the operations make sure to cut the main electric power and disconnect socket T from plug S.

DANGER-WARNING
to handle the knives and the cutterblock you shall wear safety gloves.

DANGER-WARNING
do not start the cutterblock motor when the knives are not fitted.

- Remove the spindle guard (P fig. 7.4).
- Remove the spindle (B fig. 7.4) (if present).
- To perform this operation lock the rigid shaft by inserting a fork wrench (C fig. 7.4) in the slot on the shaft.
- Insert wrench (D fig. 7.4) in the spindle (B fig. 7.4) and unscrew it in a clockwise direction.
- Turn planer spindle (F fig. 7.4) until bring the knife to be changed next to the extraction hole (A fig. 7.4).
- Loosen the gibs by exerting a light pressure with a wood or plastics hammer.
- By using a screwdriver push the knife outwards.
- Take hold of the knife with one hand and pull it out.
- Fit the new knife (E fig. 7.4) or the old one after turning it; center the knife in length direction.
- Place the machine accessories according to the working to be carried out
- Starting machine, the gibs (U fig.7.4) position themselves automatically.

Take a piece of hard wood and plane it on its whole length for a few minutes, in order to get a better locking of the cutter-gib unit.

THIS MANUAL IS PROPERTY OF SCM INDUSTRIA S.P.A - ANY TOTAL OR PARTIAL REPRODUCTION IS STRICTLY FORBIDDEN

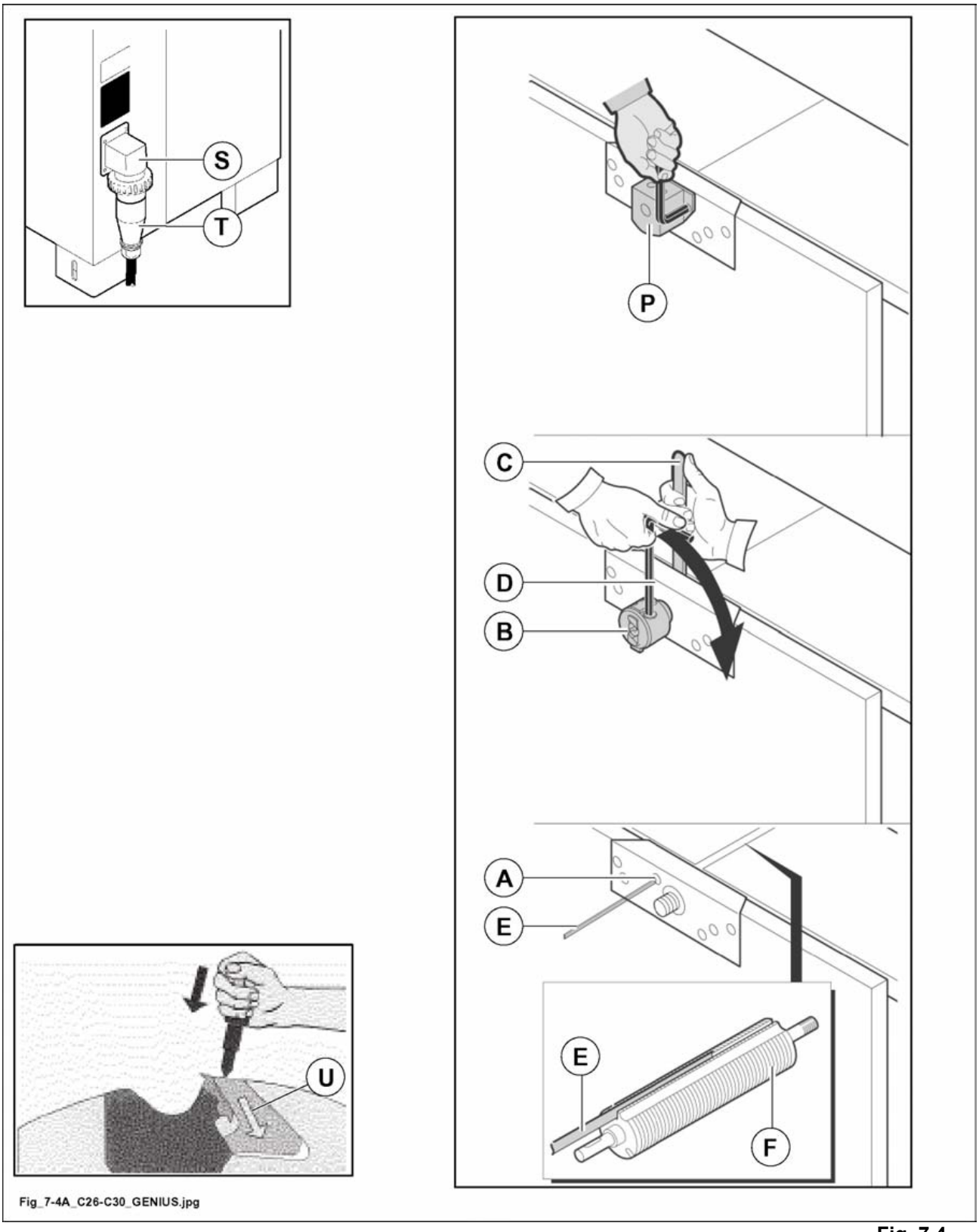

Fig. 7.4

7A.5 HELICOIDAL PLANER - TIPS REPLACEMENT

(fs_7-5_0.0)

OPT

DANGER-WARNING:
all adjusting operations are to be carried out with standstill spindle.

DANGER-WARNING:
before carrying out any of the operations make sure to cut the main electric power and disconnect socket T from plug S.

DANGER-WARNING
to handle the knives and the cutterblock you shall wear safety gloves.

For correct routine maintenance and cleaning, reach the planer unit and carry out the operations described below.

DANGER-WARNING
remove the planing fence unit (A fig.7.5) from the table.

- **Slacken the lever (L fig. 7.5) and lift the OUTLET surfacing table (E fig. 7.5);**
  (the opening of the tables activates a microswitch that stops the machine from switching on).

CAUTION:
check that the block (N fig. 7.5) of the table opening is correctly positioned.

- Rotate the planer (F fig. 7.5) to move the tip being replaced in a more accessible position.
  Loosen securing screw (V fig. 7.5) and extract tip-tool (U fig. 7.5).
  Clean rest surface (C fig. 7.5) to prevent any dust from being accumulated.
  Insert again the used tip-tool after you have rotated itself of 90 degrees as to its initial position or insert a new one.
  Insert the securing screw (V fig. 7.5) and use a dynomometric key (Z fig. 7.5) to tighten it.
- Disengage the block (N fig. 7.5) and close the tables.
  Lower the OUTLET surfacing table (E fig. 7.5). Lower the lever (L fig. 7.5) to lock table.

- Place the machine accessories according to the working to be carried out.

DANGER-WARNING
the tightening torque must be: 5,7 N • m
Each tip-tool has 4 cutting edges; after you have utilized all its cutting edges, the tip-tool must be replaced. Do not utilize tip-tools reground.

THIS MANUAL IS PROPERTY OF SCM INDUSTRIA S.P.A - ANY TOTAL OR PARTIAL REPRODUCTION IS STRICTLY FORBIDDEN

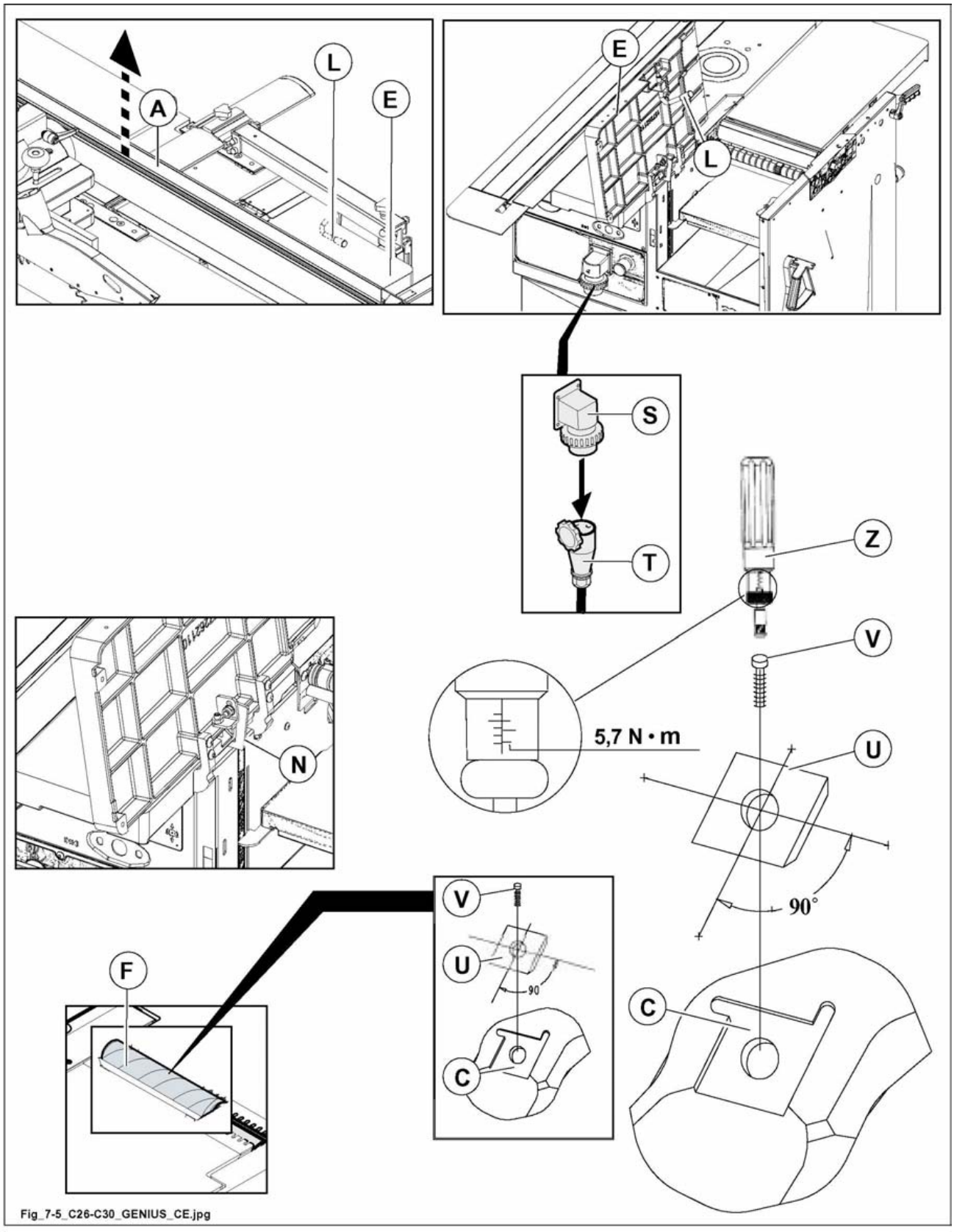

Fig. 7.5

7A.6 SURFACING TABLES ADJUSTING

(fs_7-6_0.0)

DANGER-WARNING
do not move the inlet table when the cutterblock is rotating.

DANGER-WARNING
before moving the inlet table, make sure that no object is between the inlet table and the fence.

7A.6.1 INLET TABLE

(fs_7-6-1_0.0)

- Loosen the locking (A fig. 7.6-1).
- Operate on the lever (B fig. 7.6-1) in order to place the table (D fig. 7.6-1) depending on the chosen removal: read the traverse on the data plate (C fig. 7.6-1).
- When the adjustment is over, tighten the locking (A fig. 7.6-1).

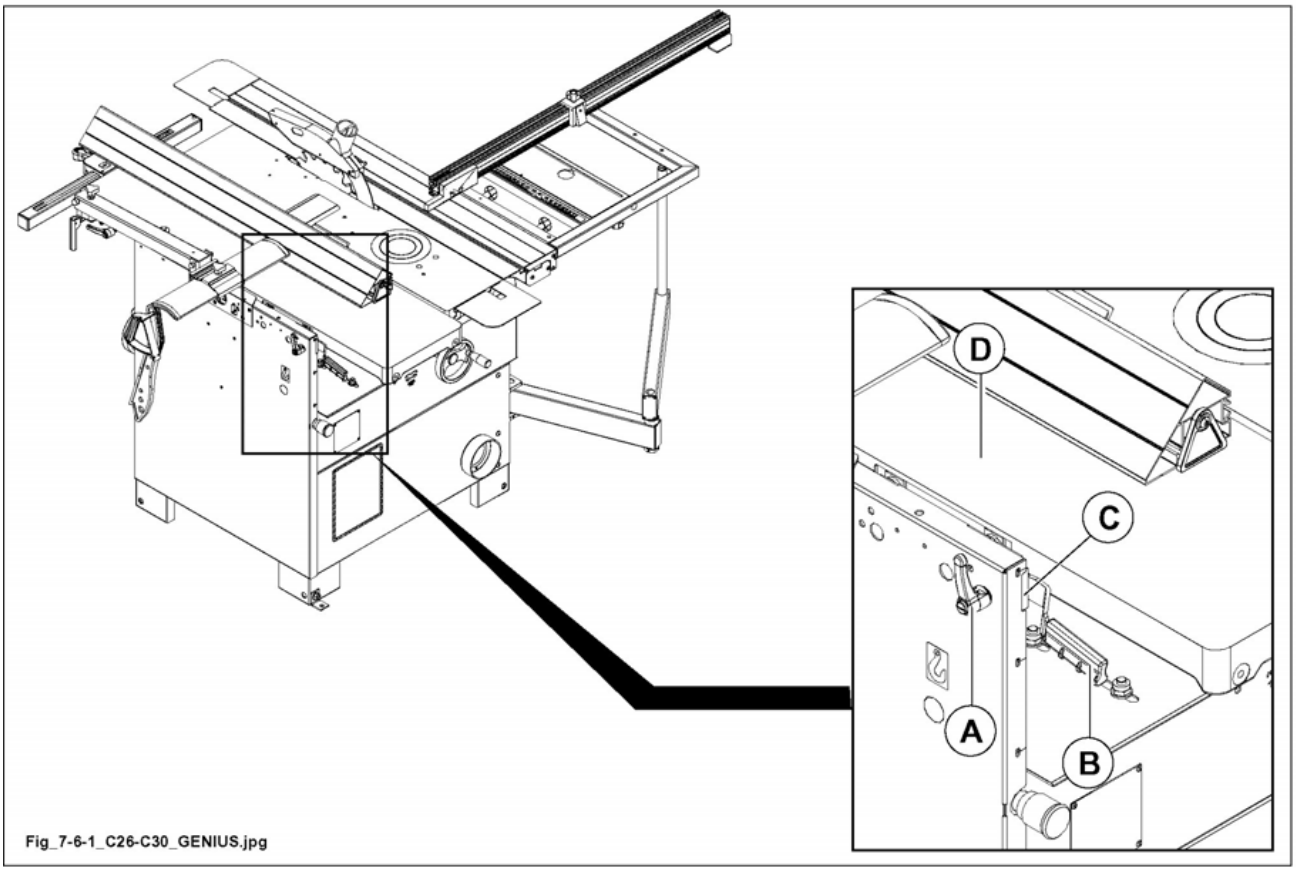

Fig. 7.6-1

 THIS MANUAL IS PROPERTY OF SCM INDUSTRIA S.P.A - ANY TOTAL OR PARTIAL REPRODUCTION IS STRICTLY FORBIDDEN

7A.6.2 OUTLET TABLE

(fs_7-6-2_0.0)

NOTE-INFORMATION:
the outfeed table (E fig. 7.6-2) is positioned level to the cutter block knife and does not need to be adjusted.

The table has been adjusted at factory during the machine test.

To make sure it is correct, place a well planed workpiece between the surface and the cutterblock; manually turn the cutterblock and make sure the cutters skim the workpiece.

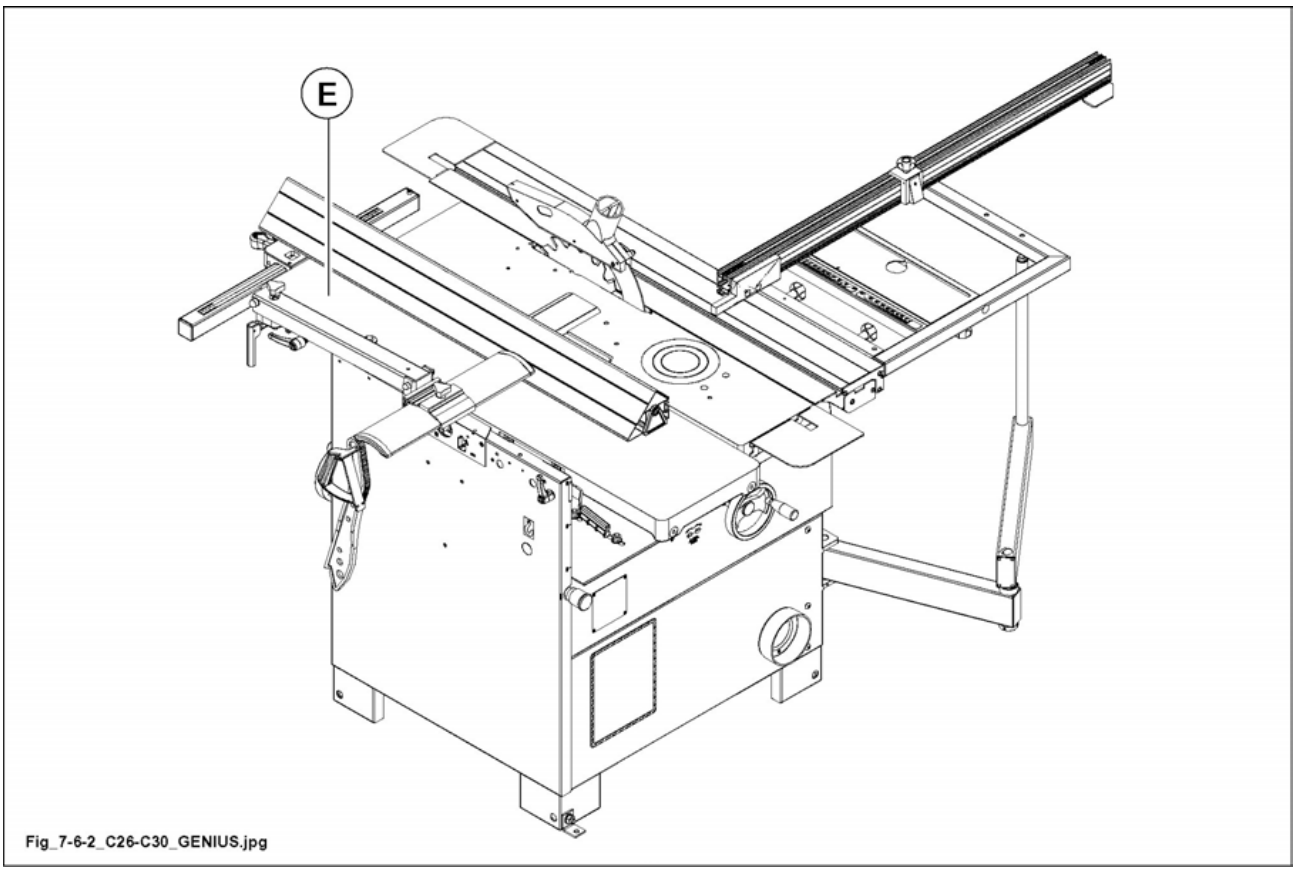

Fig. 7.6-2

7A.8 FENCE

(fs_7-8_0.0)

DANGER-WARNING
during the machining, the protections (F fig. 7.8) and (L fig. 7.8) must always be positioned on the cutterblock.

CAUTION:
lifting and handling the guide should only be carried out by personnel specially trained to execute this kind of operations, to prevent accidents or to prevent guide from being damaged.

7A.8.1 LONGITUDINAL SHIFTING

(fs_7-8-1_0.0)

- Loosen lever (A fig.7.8)and manually move fence (B fig.7.8) to the desired position; tighten lever (A fig.7.8).

NOTE-INFORMATION:
check perfect cleanage of the sliding rod (E fig. 7.8).

7A.8.2 TILTING

(fs_7-8-2_0.0)

NOTE-INFORMATION:
fence (B fig. 7.8) can assume two positions, at 90° and 45° respectively.

- Release handle (C fig 7.8) to move the fence (B fig. 7.8) to the positions outlined above; lock the lever again (C fig. 7.8).

CAUTION:
always make sure that the plastic spacer (G fig. 7.8) is positioned as shown in the diagram (1 fig. 7.8); this is to prevent interference between the guide (B fig. 7.8) and the planer spindle.

 THIS MANUAL IS PROPERTY OF SCM INDUSTRIA S.P.A - ANY TOTAL OR PARTIAL REPRODUCTION IS STRICTLY FORBIDDEN

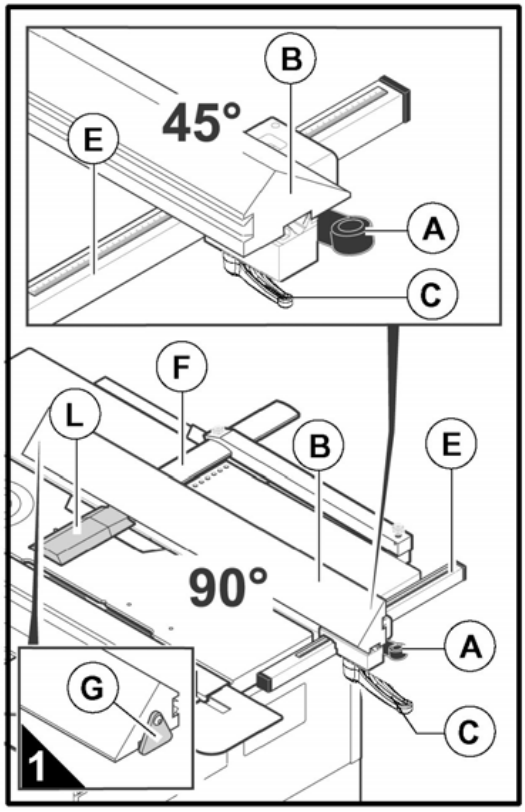

Fig_7-8A_C26-C30_GENIUS.jpg

Fig. 7.8

INDEX

8.1 Fitting the parts demounted for transport reasons 2

8.1.1 Mortiser fitting 2

8.1.2 Spindle bits - assembly 4

8.2 Mortiser use 6

8.3 Adjustments 8

8.3.1 Slot depth limitation 9

8.3.2 Slot width limitation 10

8.3.3 Height adjusting 11

8.1 FITTING THE PARTS DEMOUNTED FOR TRANSPORT REASONS

(fs_8-1_0.0)

OPT

For packing and transport reasons some machine members are removed.

8.1.1 MORTISER FITTING

(fs_8-1-1_0.0)

OPT

Carry out the fitting as follows:

1) Prepare the screws (A fig. 8.1-1) on the base of the machine.
2) Insert the mortising machine (B fig. 8.1-1) in the heads of the screws (A fig. 8.1-1) in correspondence to the three holes (E fig. 8.1-1).
3) Insert the lever (F fig. 8.1-1) in the seat of support (G fig. 8.1-1) and screw down the screw (H fig. 8.1-1).
4) Lock the lever (D fig. 8.1-1) with screw and nut.
5) Loosen the nuts (L fig. 8.1-1).
   Screw down the screws (A fig. 8.1-1) until joining the mortising machine to the base and adjust the parallelism of the table with respect to the bit (C fig. 8.1-1) (see "Spindle bits - assembly" par. 8.1.2) acting on the grub screws (M fig. 8.1-1).
   Check parallelism in the various positions translating the table (B fig. 8.1-1) by means of the lever (D fig. 8.1-1).
   Tighten the nuts (L fig. 8.1-1).
6) Tighten the screws (A fig. 8.1-1) when adjustment has been completed.

 THIS MANUAL IS PROPERTY OF SCM INDUSTRIA S.P.A - ANY TOTAL OR PARTIAL REPRODUCTION IS STRICTLY FORBIDDEN

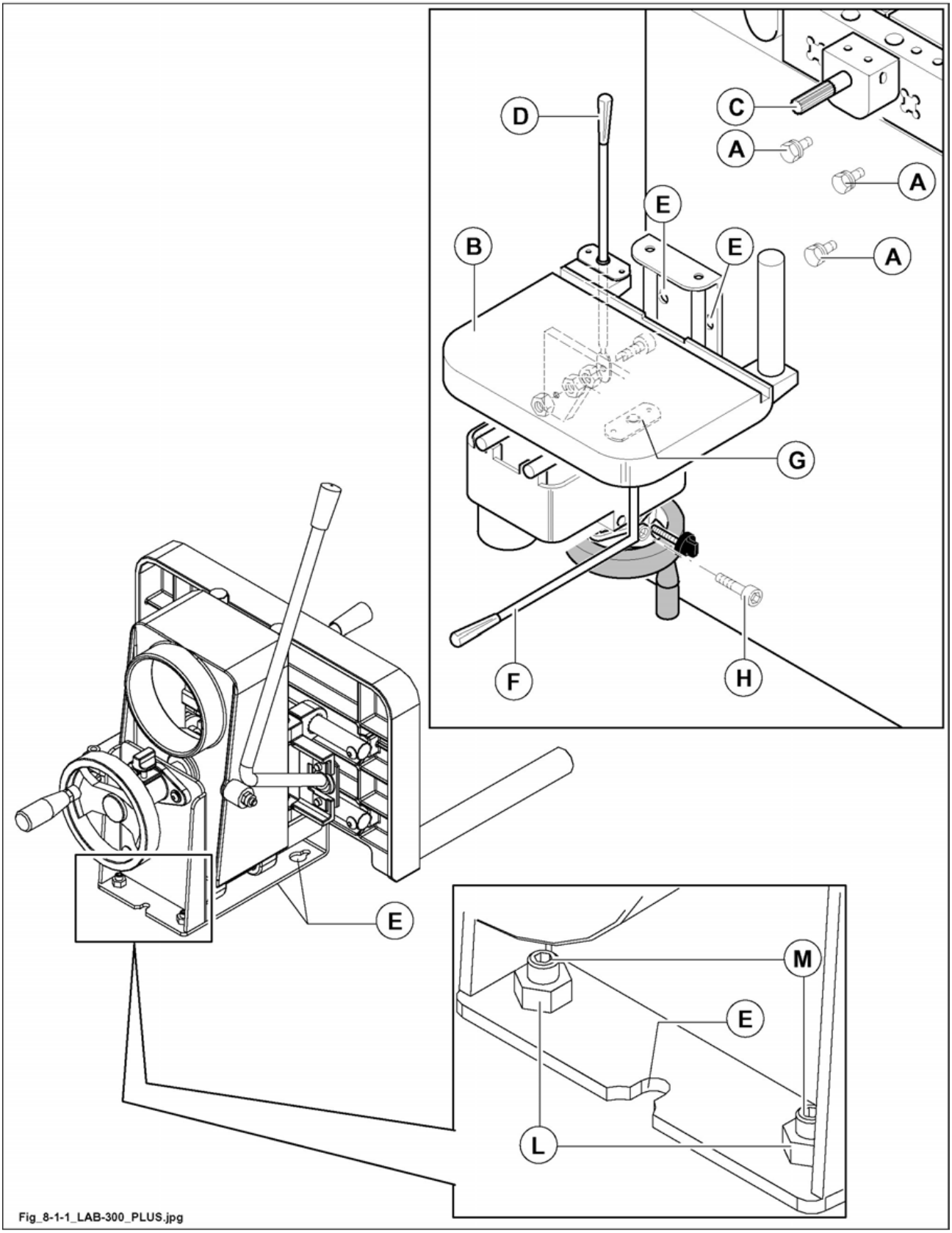

Fig. 8.1-1

8.1.2 SPINDLE BITS - ASSEMBLY

(fs_8-1-2_0.0)

DANGER-WARNING
use gloves for handling the bit.

DANGER-WARNING
before carrying out any of the operations make sure to cut the main electric power and disconnect socket T from plug S.

1) Fixed spindle
Mounts 16 mm left bits which are locked by two screws.

2) Self-centering spindle (OPT)
Mounts from 3 to 16 mm left bits which are locked by a screw.

Fitting the tool (fixed and selfcentring spindle)
Release the lever (B fig. 8.1-2) and lift the guard (C fig. 8.1-2).
Tighten the tool (D fig. 8.1-2) though the holes (A fig. 8.1-2) din the spindle cover.

Release the lever (B fig. 8.1-2) and lift the guard (C fig. 8.1-2).

DANGER-WARNING
it is prohibited to use abrasive grinding wheels.
When the slotter is not in use, it is necessary to disassemble the bit, as it rotates jointly with the surfacing table shaft and it cannot be protected.
The bits must be locked over the entire useful length of the spindle.

DANGER-WARNING
before you start machining, rest the guard (C fig. 8.1-2) on the table so that the cutter block is completely covered.

 THIS MANUAL IS PROPERTY OF SCM INDUSTRIA S.P.A - ANY TOTAL OR PARTIAL REPRODUCTION IS STRICTLY FORBIDDEN

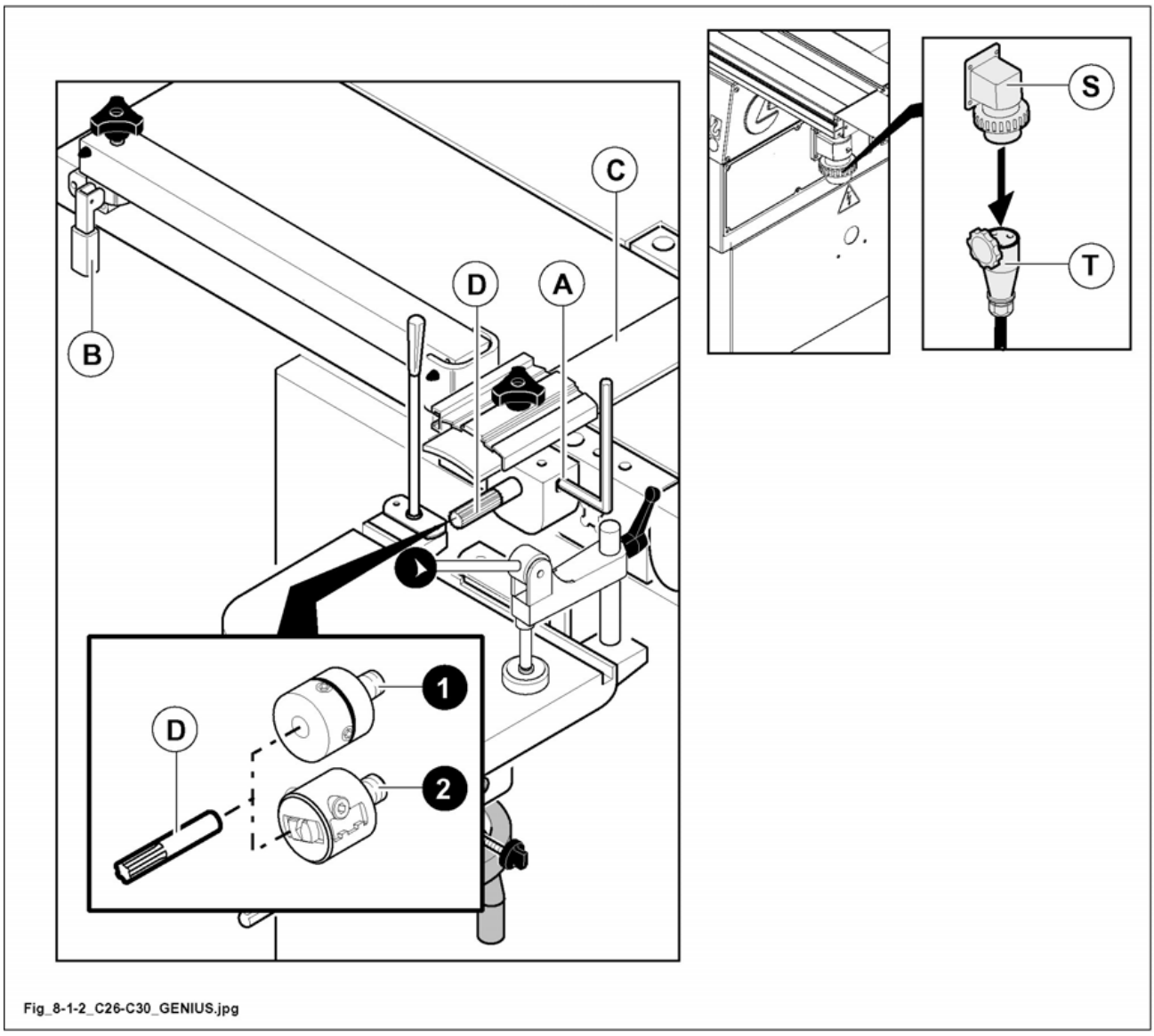

Fig. 8.1-2

8.2 MORTISER USE

(fs_8-2_0.0)

OPT

SAFETY OVER ALL

DANGER-WARNING
the tool must turn in the direction indicated by the arrow as shown in fig. 8.2.
Switch on the machine for a fraction of a second and check the direction of rotation. Should rotation be incorrect, follow the instructions listed in Chap. 4 "Electrical connection".
Mount the tool following the instructions and warnings listed in par. 8.1.2.
Check that the tool is well tightened.

DANGER-WARNING
always make sure that the workpiece is rightly clamped on the table.

For long workpieces use a support the height of which may be adjusted and eventually add a clamping device to the support (not supplied by SCM***).***

Work with moderate feed speed with small strokes because the bit is brittle.

Before starting working always make sure that the cutterblock is protected.

As the bit and cutterblock rotate together, after the use as a mortiser demount the bit as it is not protected.

DANGER-WARNING
lift the lever (H fig. 8.2) and turn over the protection (P fig. 8.2) by 180°. Translate the buzz planer guide (L fig. 8.2) up to end of travel in such a way that the planer spindle is completely covered with the guard (E fig. 8.2).

After adjusting the table stroke, set the workpiece against stop (B fig. 8.2)and clamp it with foot(Z fig. 8.2).

With levers (A and S fig. 8.2)start drilling in longitudinal direction with a drilling depth equal to 10 mm, then carry out the drilling in the traverse direction along the entire length of the slot desired.

The milling may be carried out with many adiacent holes, the slot is obtained with a traverse stroke.

This technique is necessary to avoid the bit rupture (tool always brittle), to permit the chips exhaust and to avoid the overheating of the tool which may be damaged so the working quality is not ensured.

THIS MANUAL IS PROPERTY OF SCM INDUSTRIA S.P.A - ANY TOTAL OR PARTIAL REPRODUCTION IS STRICTLY FORBIDDEN

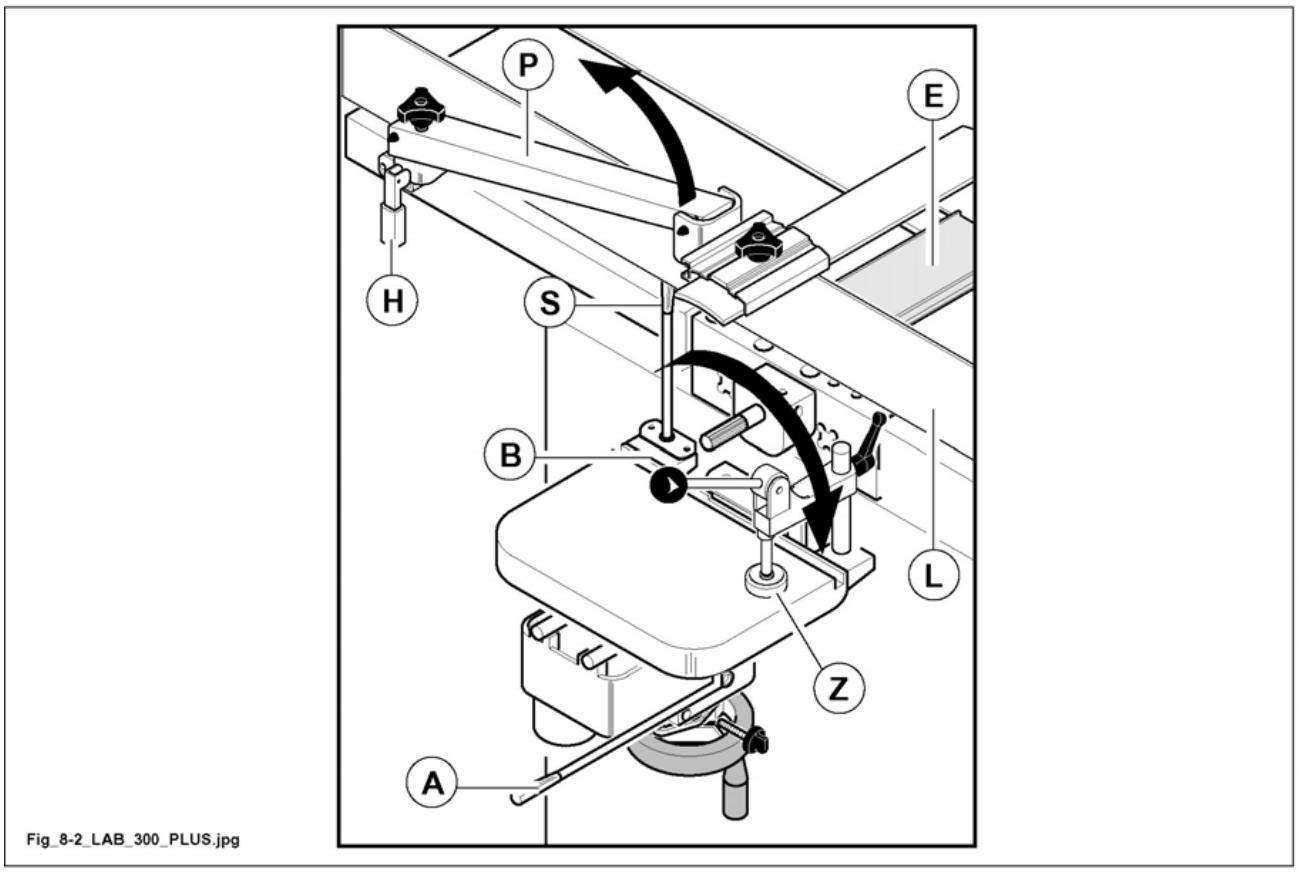

Fig. 8.2

8.3 ADJUSTMENTS

(fs_8-3_0.0)

OPT

With the use of slotter it is possible to carry out holes and slots both dead or through.

- Place the workpiece on the table, stopping it and securing it by means of the presser (B fig. 8.3).

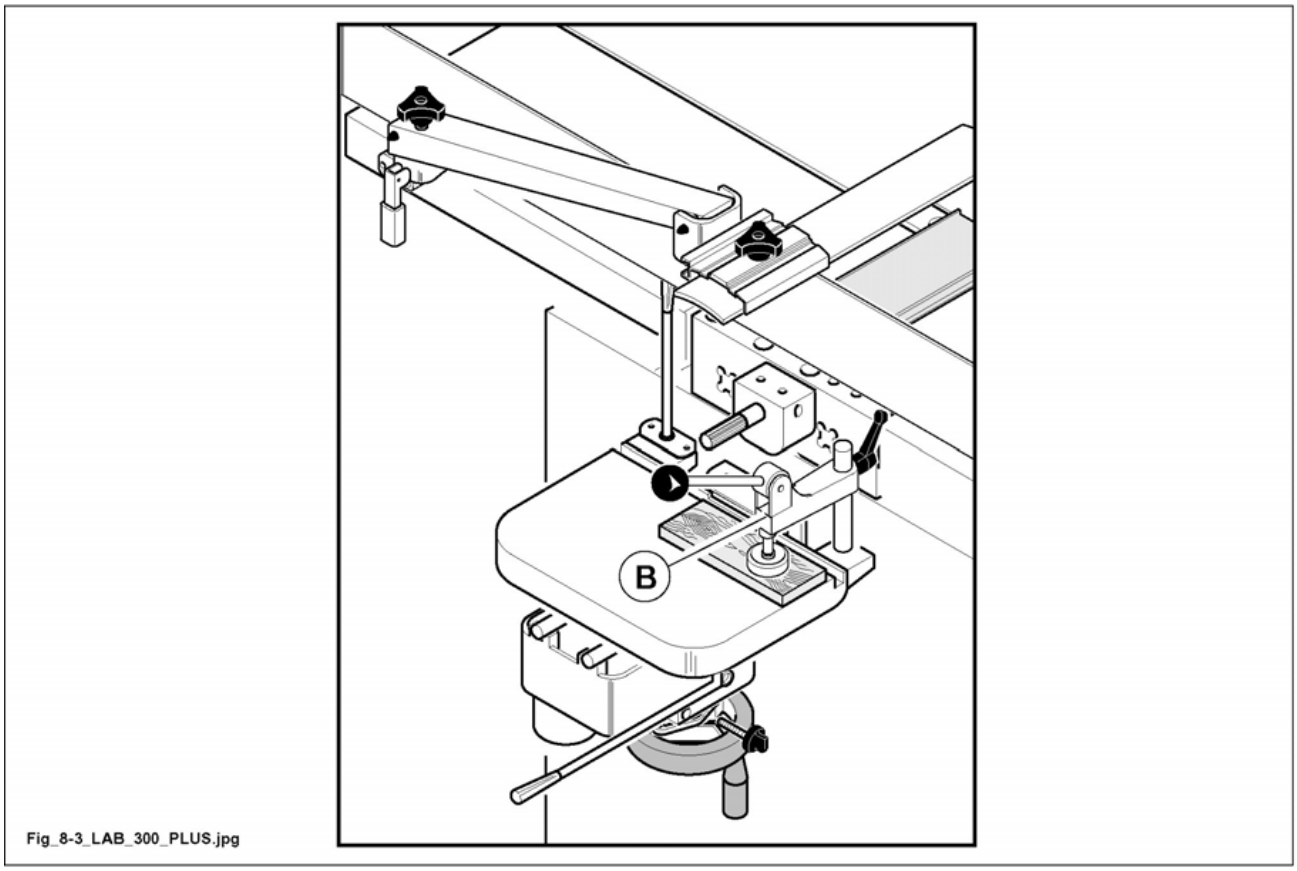

Fig. 8.3

THIS MANUAL IS PROPERTY OF SCM INDUSTRIA S.P.A - ANY TOTAL OR PARTIAL REPRODUCTION IS STRICTLY FORBIDDEN

8.3.1 SLOT DEPTH LIMITATION

(fs_8-3-1_0.0)

In the case of dead holes you have to adjust the stroke of additional table (A fig. 8.3-1) (axis Z):

- check the forward stroke by lever (F fig. 8.3-1), adjust the depth stop by means of knob under the table (A fig. 8.3-1).

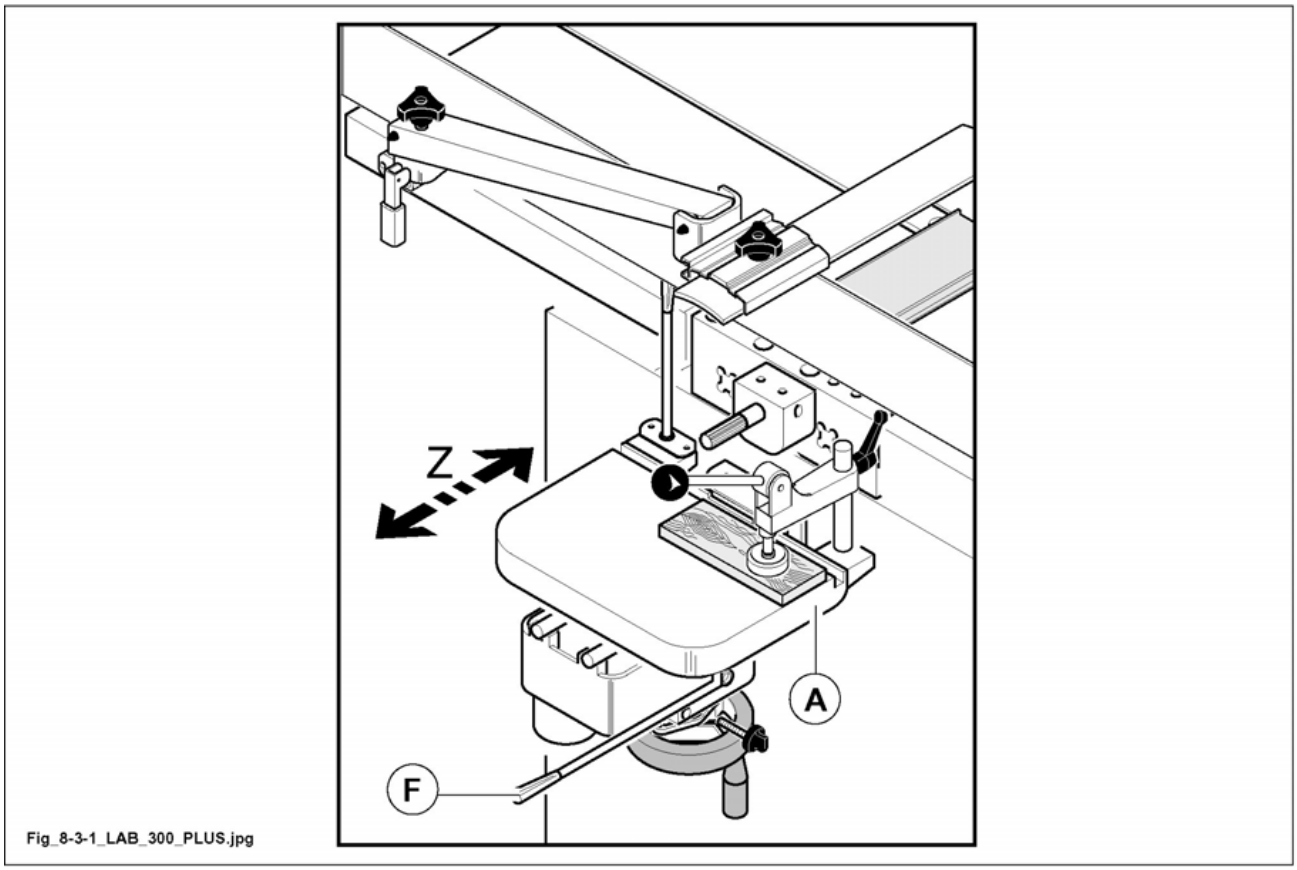

Fig. 8.3-1

8.3.2 SLOT WIDTH LIMITATION

(fs_8-3-2_0.0)

For mortising which does not go through the workpiece, adjust the depth of the stroke, as already indicated, and the transversal stroke of the table (X-axis):

- using a pencil, mark the position of the mortise to be cut on the workpiece (1 fig. 8.3-2).
- Test the transversal stroke using lever (D fig. 8.3-2) according to the mortise to be cut and adjust the side stops to suit, by tightening the knob (A fig. 8.3-2) under the table.

NOTE-INFORMATION:
to carry out slots, it is necessary to drill a row of holes, then, moving the table by means of the lever (D fig. 8.3-2), the inside of the slot is thoroughly cleaned.

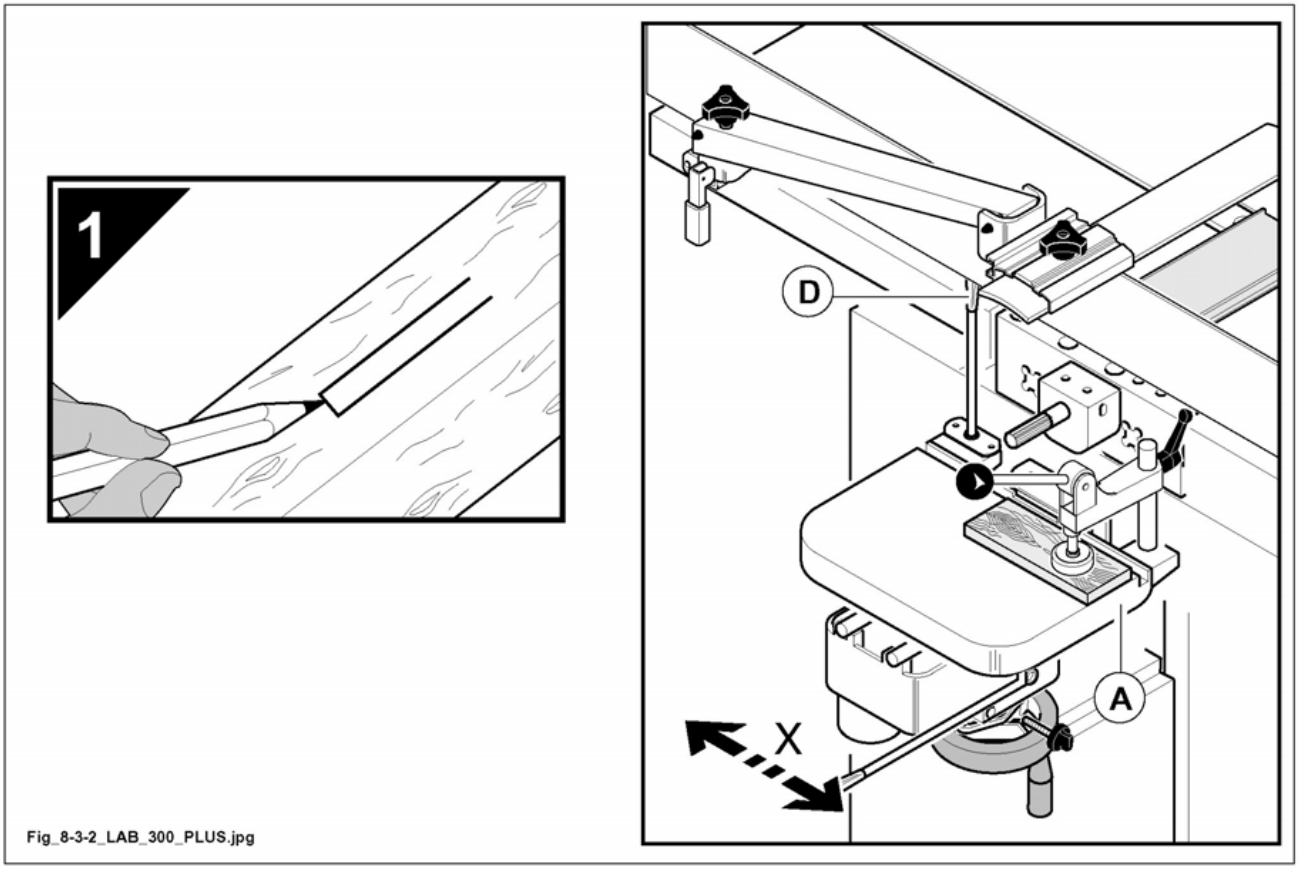

Fig. 8.3-2

THIS MANUAL IS PROPERTY OF SCM INDUSTRIA S.P.A - ANY TOTAL OR PARTIAL REPRODUCTION IS STRICTLY FORBIDDEN

8.3.3 HEIGHT ADJUSTING

(fs_8-3-3_0.0)

- Position the table at the correct height using the accessory handwheel (C fig. 8.3-3); lock it in position by tightening the knob (G fig. 8.3-3).

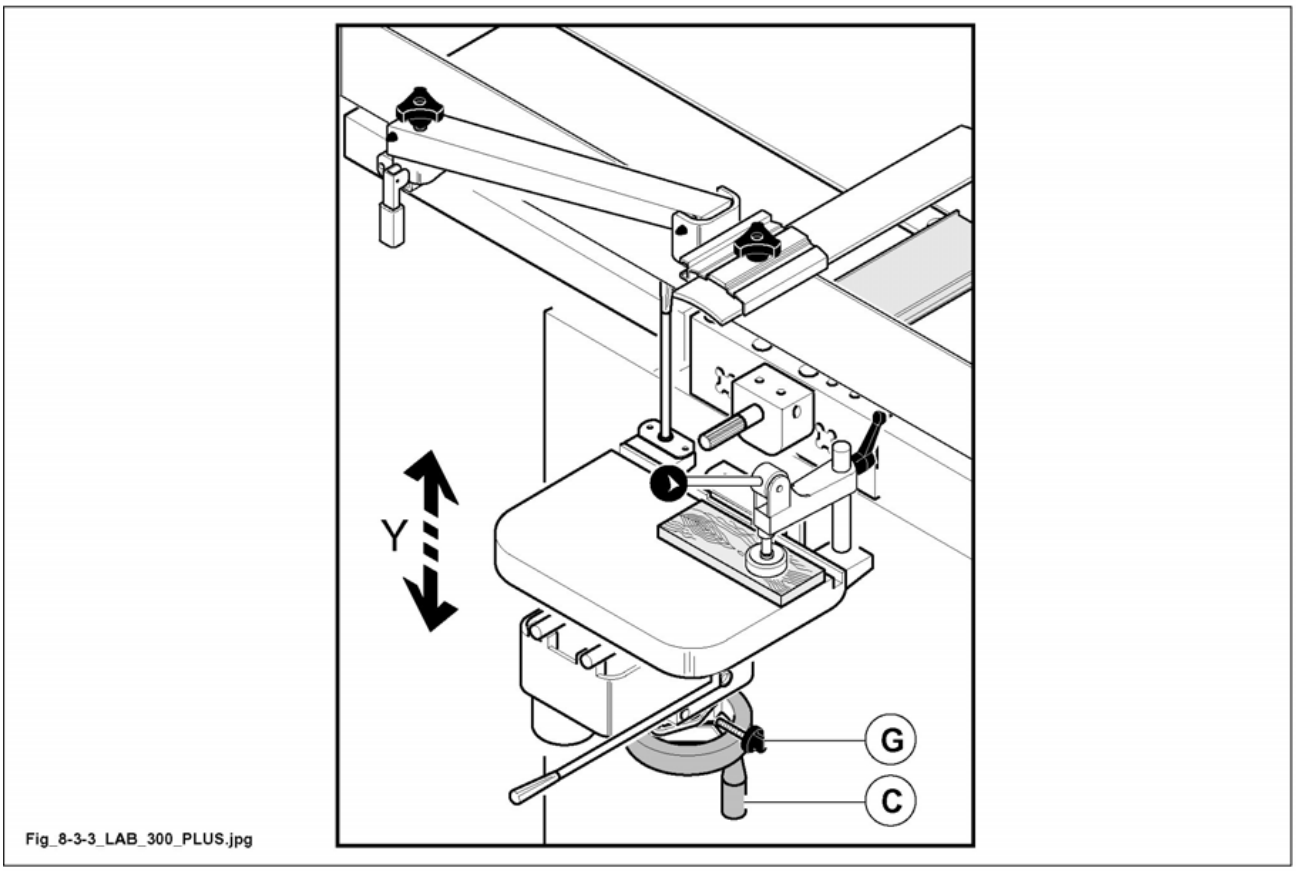

Fig. 8.3-3

INDEX

9.1 Preliminary adjustment for passing from planing to thicknessing.....2

9.1.1 Machine with manual table lifting 2

9.2 Adjustment to pass from thicknessing to surface planing 4

9.2.1 Machine with manual table lifting 4

9.4 Automatic feed and speed change.....6

9.5 Manual adjusting of thicknessing table 7

9.9 Safety guards 8

9.10 Knife adjustment 10

9.11 Knife replacing 10

9.12 Replacing the throw-away knives.....10

9.12A Helicoidal planer - Tips replacement.....10

9.1 PRELIMINARY ADJUSTMENT FOR PASSING FROM PLANING TO THICKNESSING

(fs_9-1-0.0)

NOTE-INFORMATION:
THICKNESSING
This operation is carried out for obtaining the required thickness of a given workpiece after surfacing.

9.1.1 MACHINE WITH MANUAL TABLE LIFTING

(fs_9-1-1_0.0)

DANGER-WARNING
remove the planing fence unit (A fig. 9.1-1) from the table.

- Stop cutterblock motor.
- Wait for a few seconds until the cutterblock stops completely.
- **Slacken the lever (L fig. 9.1-1) and lift the OUTLET surfacing table (C fig. 9.1-1);**
  (the opening of the tables activates a microswitch that stops the machine from switching on).

CAUTION:
check that the block (N fig. 9.1-1) of the table opening is correctly positioned.

- Loosen the locking (D fig. 9.1-1).
- Operate on the lever (B fig. 9.1-1) in order to place the table (P fig. 9.1-1).
  Lower the planing table (P fig. 9.1-1) so that guard (F fig. 9.1-1) is locked correctly.
  Turn the chip conveyor hood (F fig. 9.1-1) upside down securing it by the spring (M fig. 9.1-1) (the hood rotation reacts again on the micro-switch, reactivating the machine).
- When the adjustment is over, tighten the locking (D fig. 9.1-1).

NOTE-INFORMATION:
thicknessing can only be carried out if the safety guard (F fig. 9.1-1) is in position.
This position is checked by an electro-mechanical limit switch.

THIS MANUAL IS PROPERTY OF SCM INDUSTRIA S.P.A - ANY TOTAL OR PARTIAL REPRODUCTION IS STRICTLY FORBIDDEN

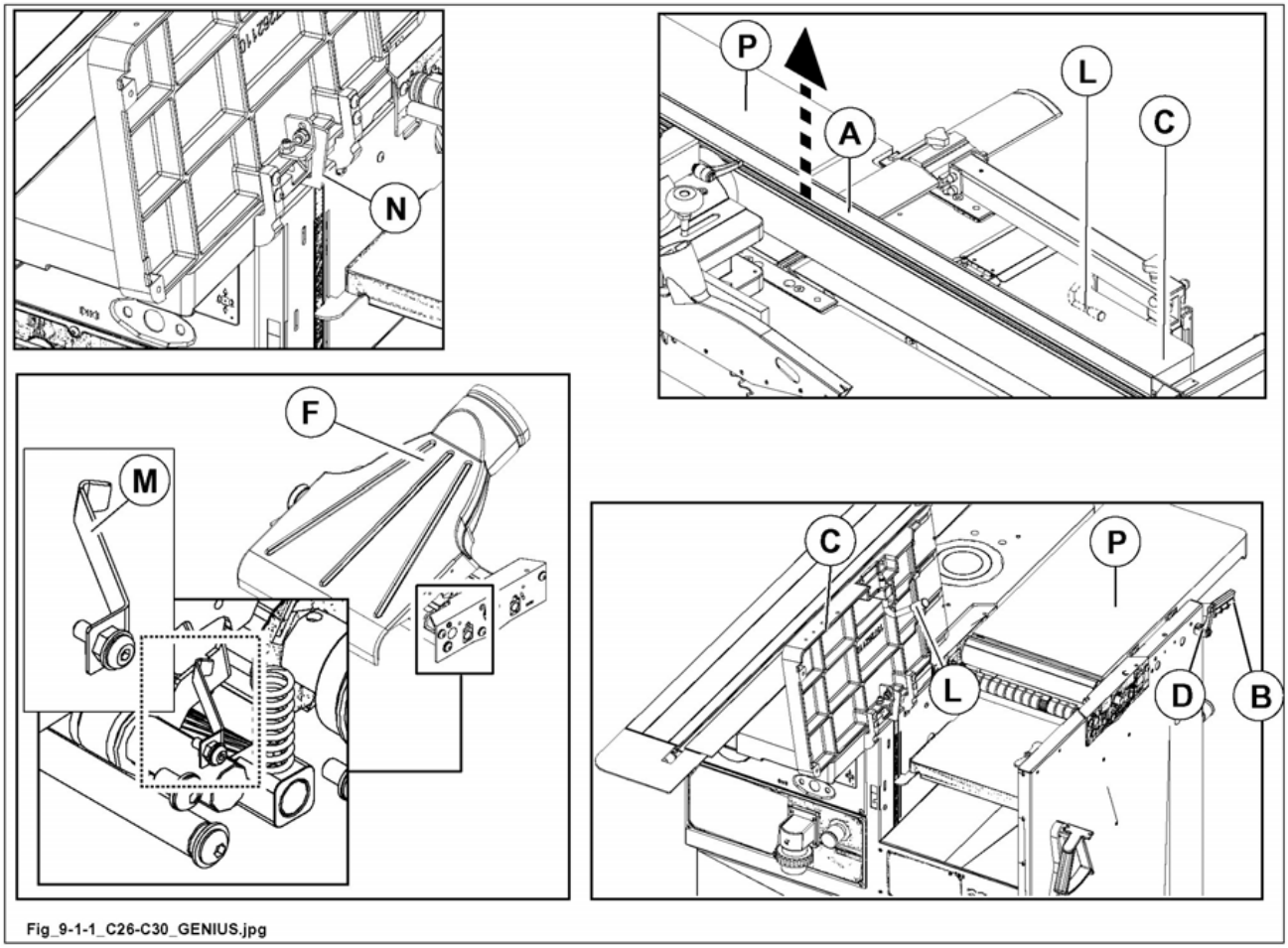

Fig. 9.1-1

9.2 ADJUSTMENT TO PASS FROM THICKNESSING TO SURFACE PLANING

(fs_9-2_0.0)

NOTE-INFORMATION:
SURFACING TABLES
This operation is carried out for straightening a wood piece and for trimming the long side of a panel. In this way you get a reference plan for the next working steps. After straightening a ledge side surface side at 90° in order to carry out the thicknessing: in this way it is possible to obtain a finished piece planned on all 4 sides.

9.2.1 MACHINE WITH MANUAL TABLE LIFTING

(fs_9-2-1_0.0)

When the thicknessing is finished, to use the surfacing unit:

1) Stop planer motor.
2) Wait few seconds for the complete cutterblock stop.

CAUTION:
before lowering the planing tables, remember to open the chip conveyor guard (F fig. 9.2-1) and lower the thicknessing table to the red notch (M fig. 9.2-1) so as not to damage any element and return the lever (L fig. 9.2-1) to the "0" position (deactivation of the feeding rollers).

3) Disengage the block (N fig. 9.2-1) and close the tables.
4) Lower handle (B fig. 9.2-1) to lock tables.

THIS MANUAL IS PROPERTY OF SCM INDUSTRIA S.P.A - ANY TOTAL OR PARTIAL REPRODUCTION IS STRICTLY FORBIDDEN

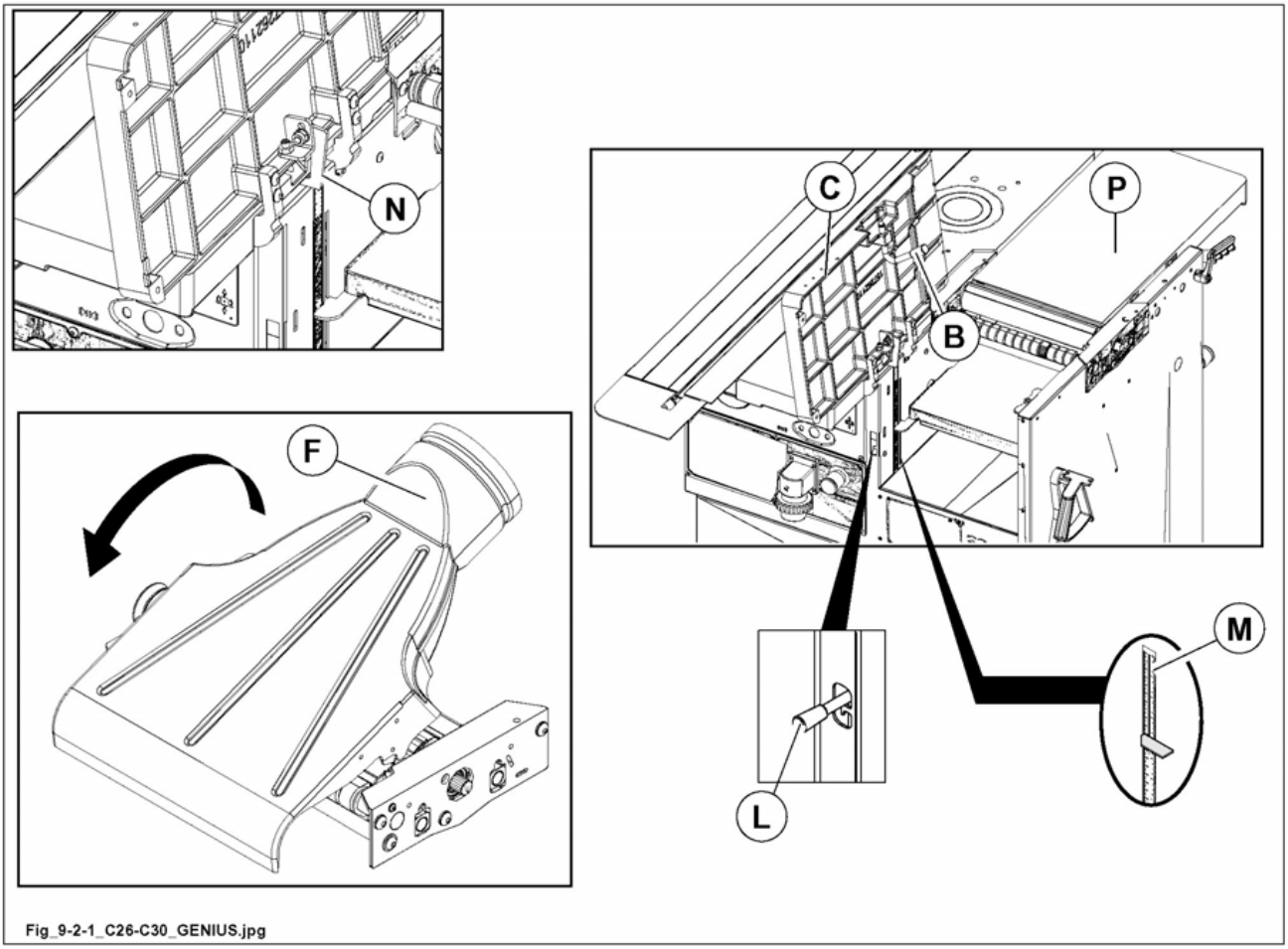

Fig. 9.2-1

9.4 AUTOMATIC FEED AND SPEED CHANGE

(fs_9-4_0.0)

To switch on the feed turn lever (L fig. 9.5). Carry out this operation with the machine running.

NOTE-INFORMATION:
the feed is possible only if the cutterblock is rotating.

DANGER-WARNING
never machine workpiece of length and thickness lower than the values permitted (L = 120 mm; thickness 3,0 mm), as in that case the system, which control the feed and the pressure on the workpiece, can not operate and causes dangerous conditions.

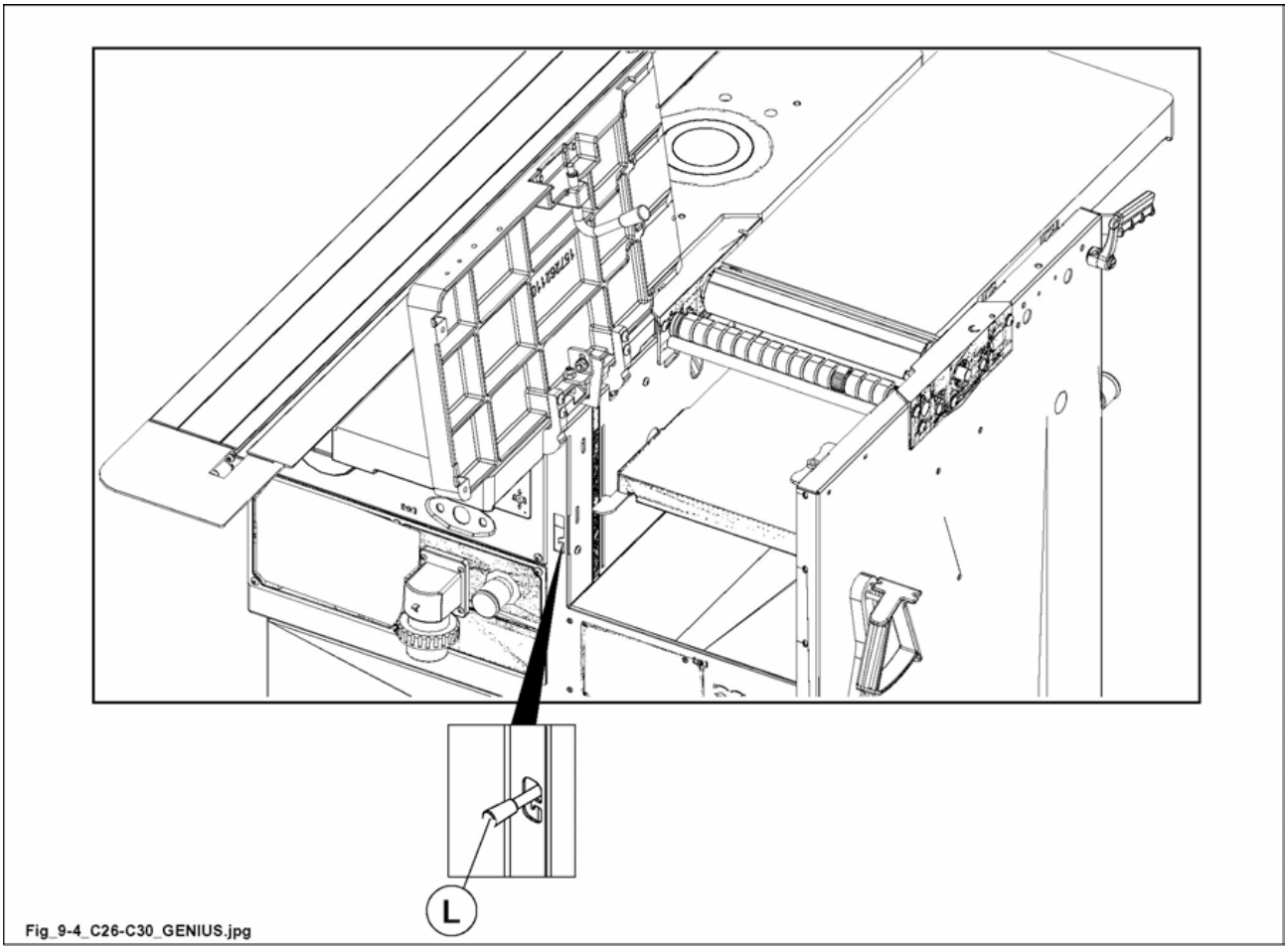

Fig. 9.4

THIS MANUAL IS PROPERTY OF SCM INDUSTRIA S.P.A - ANY TOTAL OR PARTIAL REPRODUCTION IS STRICTLY FORBIDDEN

9.5 MANUAL ADJUSTING OF THICKNESSING TABLE

(fs_9-5-0.0)

DANGER-WARNING
Before lifting the thicknessing table make sure that there are no wood residures on the table, as in that case the system, which control the feed and the pressure on the workpiece, can not operate and causes dangerous conditions.

For thicknessing table lifing operate on handwheel (V fig. 9.5) after unlocking knok (P fig. 9.5).

Always reach the working height with table motion upwards to take up slack bewteen lead screws and lead nuts.

Turn the handwheel watching numeric gauge (L fig. 9.5).

After adjusting lock handwheel (V fig. 9.5) by knob (P fig. 9.5).

FORBIDDEN:
it is forbidden to move the table when the machine is running.

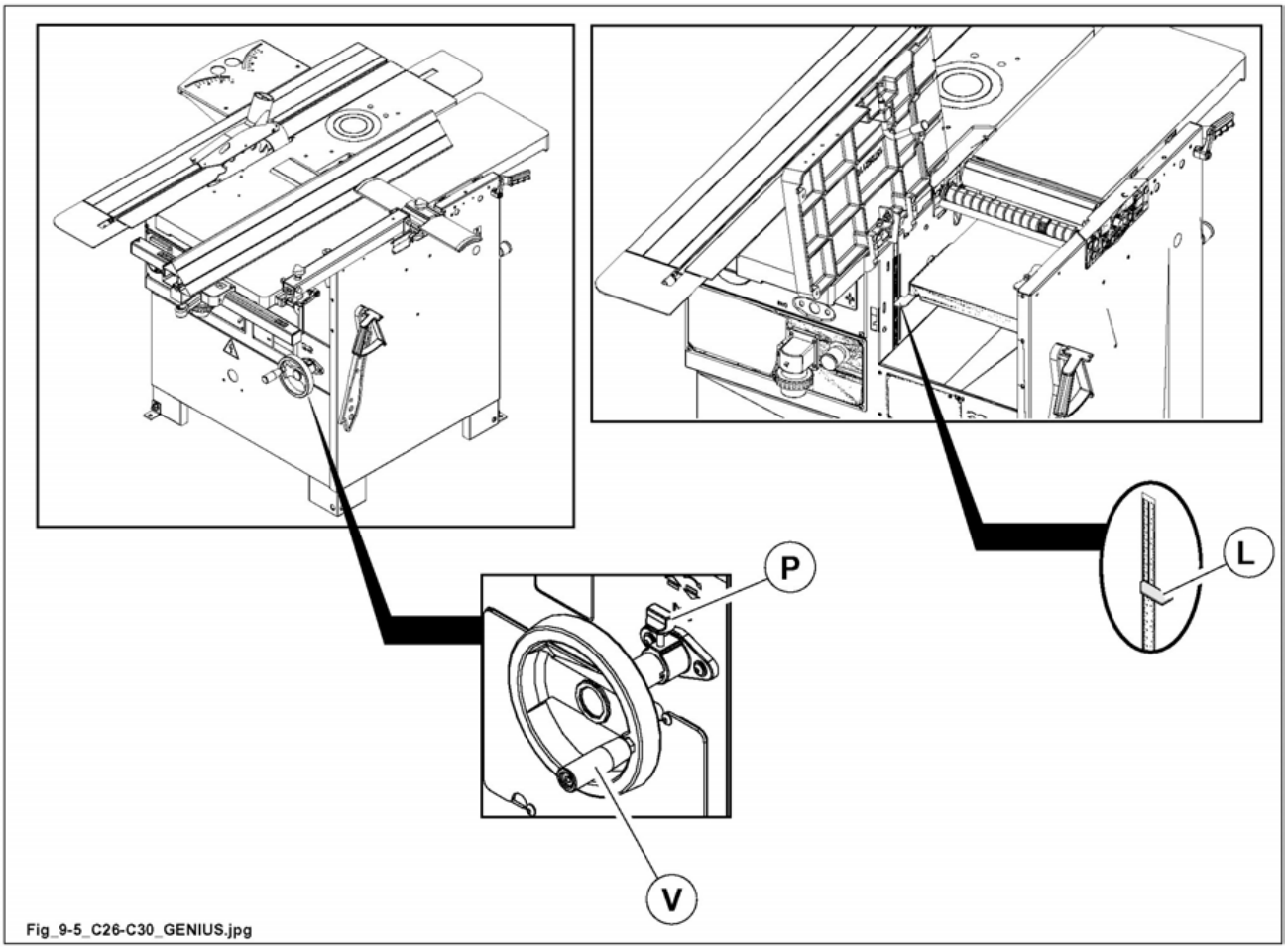

Fig. 9.5

9.9 SAFETY GUARDS

(fs_9-9_0.0)

- Anti-kickback fingers (T fig. 9.9) working with pieces of different thickness prevent the workpiece to be thrown back towards the operator, thus providing an effective protection.
- Before starting the working check that the fingers (T fig. 9.9) can rotate smoothly around their support shafts.
- The presence of chips and dust in position corresponding to anti-kickback fingers (T fig. 9.9) can compromise the good machine operation.
- The opening of anti-kickback fingers (T fig. 9.9) can cause the ejection of splints compromising the operator safety.
- To prevent binding or jamming of some fingers (T fig. 9.9), always keep clean them clean by removing the shavings fitted in the fingers.
- Remove resin residues by washing the unit with a brush and terpentine.
  NEVER OIL OR GREASE THE ANTI-KICK BACK FINGERS.
  Thicknessing can only be carried out if the safety guard is in position (A fig. 9.9).

FORBIDDEN:
the machine use is forbidden if these conditions are not ensured.

SAFETY WARNINGS

- Periodically press emergency button to verify the efficiency.
- DO NOT process wood pieces with clefts, knots etc.
- **DO NOT feed boards with different thickness at the same time.**
- Make sure that the feed rollers are free to rise in the right way.
- Never stay in front of the machine infeed side during the working and do not try to look inside the machine; there is the danger that the splinters are ejected.
- Never put your hands inside the machine to remove chips or splinters when the machine is running.
- **When a workpiece is locked in the machine, stop the cutterblock, lower the table, take off the piece.**
- DO NOT try to carry out depth of cut larger than the one specified.
- It is forbidden to move the table when the machine is running.
- **DO NOT workpieces of too large thickness or lower than 3.0 mm**
- **DO NOT workpieces of length lower than 120 mm**

THIS MANUAL IS PROPERTY OF SCM INDUSTRIA S.P.A - ANY TOTAL OR PARTIAL REPRODUCTION IS STRICTLY FORBIDDEN

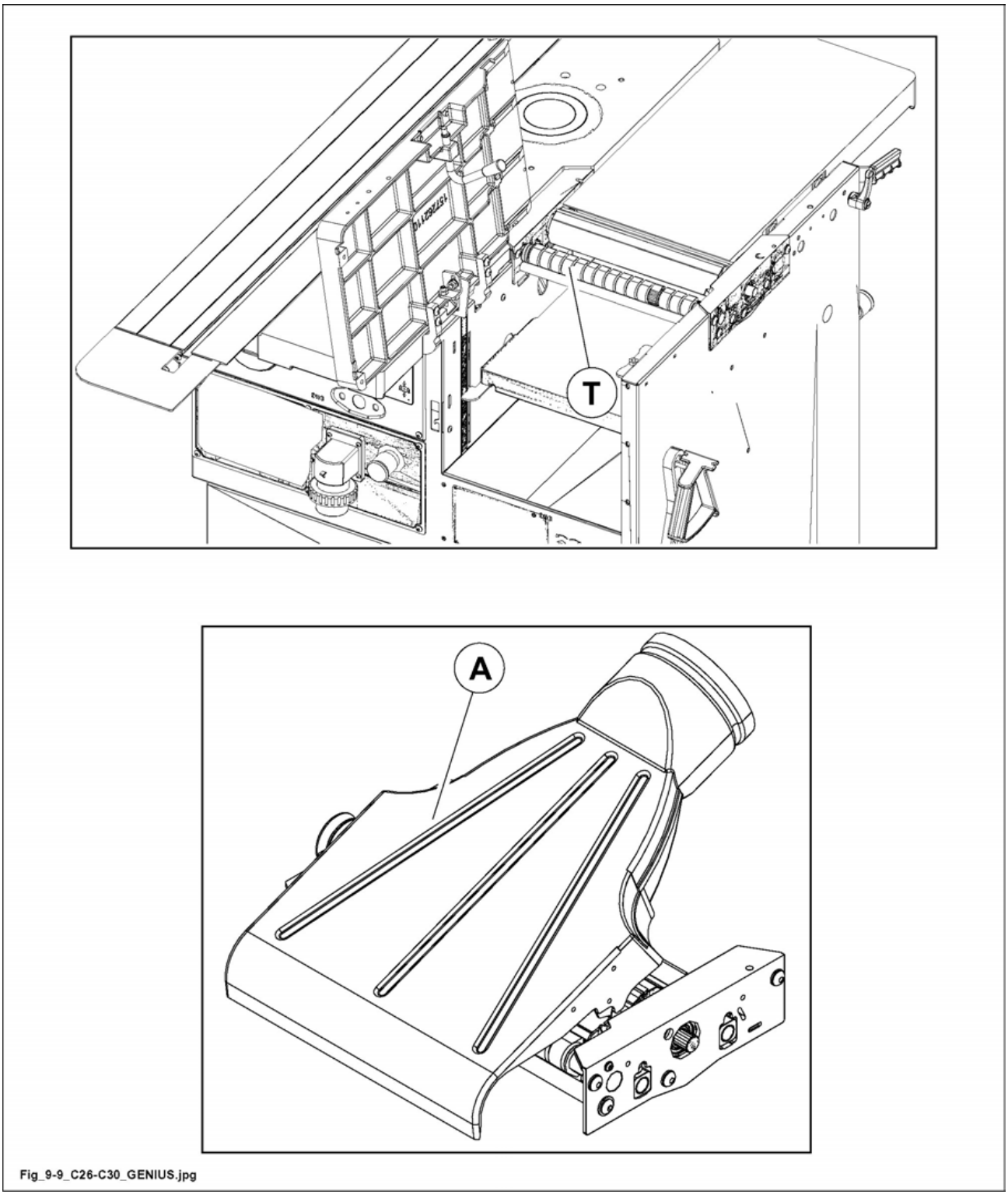

Fig. 9.9

9.10 KNIFE ADJUSTMENT

(fs_9-10_0.0)

DANGER-WARNING
to handle the knives and the cutterblock you shall wear safety gloves.

For adjusting the knife projection see Chapter 7a.

9.11 KNIFE REPLACING

(fs_9-11_0.0)

DANGER-WARNING
to handle the knives and the cutterblock you shall wear safety gloves.

For adjusting the knife projection see Chapter 7a.

9.12 REPLACING THE THROW-AWAY KNIVES

(fs_9-12_0.0)

OPT

DANGER-WARNING
to handle the knives and the cutterblock you shall wear safety gloves.

DANGER-WARNING
do not start planer spindle motor when knives are not fitted.

For adjusting the knife projection see Chapter 7a.

9.12A HELICOIDAL PLANER - TIPS REPLACEMENT

(fs_9-12a_0.0)

OPT

DANGER-WARNING
to handle the knives and the cutterblock you shall wear safety gloves.

See Chapter 7a.

THIS MANUAL IS PROPERTY OF SCM INDUSTRIA S.P.A - ANY TOTAL OR PARTIAL REPRODUCTION IS STRICTLY FORBIDDEN

INDEX

9A Safety notes 3

9A.1 Adjustments 4

9A.1.1 Spindle height adjusting 4

9A.1.1.1 Spindle height adjusting 4

9A.3 Spindle speed selection 6

9A.3.1 Speed change 7

9A.3.1.1 Speed change 8

9A.6 Rule on tenoning table 10

9A.6.1 Rule rotation 10

9A.6.2 To move the rule up to the tool 10

9A.8 Using the tenoning table 12

9A.8.1 Tenoning 14

9A.8.1.1 Clamping arm use 14

9A.8.2 Oblique tenons 16

9A.8.2.1 Clamping arm use 16

9A.33 Adjustable Hood-Fence unit 18

9A.33.1 Adjust spindle moulder hood guide for moulding without removal 20

9A.33.2 Adjust spindle moulder hood for moulding with removal. 22

9A.33.3 Use of hood-fence for small pieces 24

9A.33.5 Working examples 25

9A.44 Tenoning hood 28

9A.44.1 Adjusting 28

THIS MANUAL IS PROPERTY OF SCM INDUSTRIA S.P.A - ANY TOTAL OR PARTIAL REPRODUCTION IS STRICTLY FORBIDDEN

9A.50 Pressure unit for profiling 30

9A.50.1 Adjusting 32

9A.55 Guard for milling at the spindle 34

9A.55.2 Adjusting 34

9A.55.3 Working examples 36

9A.55.4 Maintenance 37

 THIS MANUAL IS PROPERTY OF SCM INDUSTRIA S.P.A - ANY TOTAL OR PARTIAL REPRODUCTION IS STRICTLY FORBIDDEN

9A SAFETY NOTES

(sic_toupie)

SAFETY OVER ALL

DANGER-WARNING
remove the saw guard and lower the blade completely beneath the table.

Always fit the spindle moulder guard suitable for the intended machining task, as indicated in the following paragraphs.

It is forbidden to fit tools with a diameter greater than indicated;
(the dimensions are given in section 3.2 "Technical Data").

Before lowering the tool below the table always make sure that its diameter does not exceed 145 mm (MAXIMUM SIZE OF TOOL WITHDRAWN UNDER TABLE Ø 145 X 35).

Machining tasks with the spindle moulder hood must be carried out by keeping the two support tables as closed as possible to stop the tool dragging the workpiece.

Before proceeding with machining adjust the spindle moulder hood and hold-downs as indicated in section 9A.33.

THIS MANUAL IS PROPERTY OF SCM INDUSTRIA S.P.A - ANY TOTAL OR PARTIAL REPRODUCTION IS STRICTLY FORBIDDEN

9A.1 ADJUSTMENTS

(cu_9a-1_0.0)

DANGER-WARNING:
ensure that during shaft movement there is no interference with machine parts.

9A.1.1 SPINDLE HEIGHT ADJUSTING

(cu_9a-1-1_0.0)

It adjusts the tool to the worktable.

DANGER-WARNING:
the tool adjusting must be carried out with machine off.

9A.1.1.1 SPINDLE HEIGHT ADJUSTING

(cu_9a-1-1-1_0.0)

- Loosen the knob (B fig. 9.1-1-1).
- The spindle height adjusting occurs by means of handwheel (A fig. 9.1-1-1).
- After any adjusting tighten knob (B fig. 9.1-1-1).

DANGER-WARNING:
to take up slack you have to reach the right height always with motion upwards.
Every turn of the handwheel corresponds to a 2mm shifting.

THIS MANUAL IS PROPERTY OF SCM INDUSTRIA S.P.A - ANY TOTAL OR PARTIAL REPRODUCTION IS STRICTLY FORBIDDEN

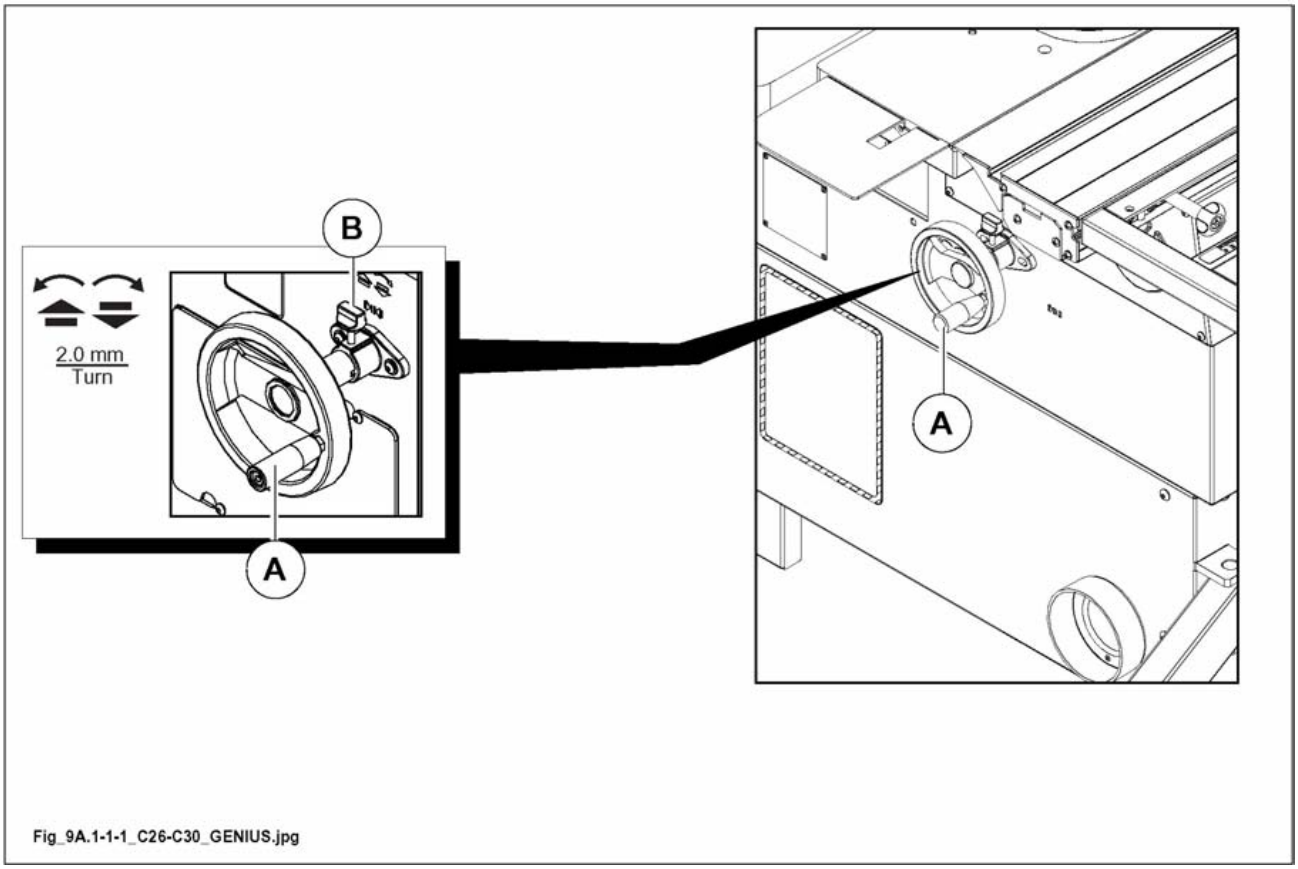

Fig. 9.1-1-1

9A.3 SPINDLE SPEED SELECTION

(cu_9a-3_0.0)

Select the spindle speed according to the tool, the wood and the working (see fig. 9.3A).

DANGER-WARNING:
tenoning must exclusively be carried out with a spindle rotation speed of 5000 rpm (50 Hz) - 6000 rpm (60 Hz).

DANGER-WARNING:
do not select values different from the ones indicated in diagramm (fig. 9.3A), or rotation speed higher than the speed indicated on the tool.
There is the risk of piece kickback or tool rupture.

DANGER-WARNING:
in case of more tools fitted to the spindle, the lowest maximum rotation speed tool is to be considered as a reference. (e.g.: never exceed 6000 rpm, if you use 2 tools, one tool with max. speed 8000 rpm the other tool with max. speed 6000 rpm).

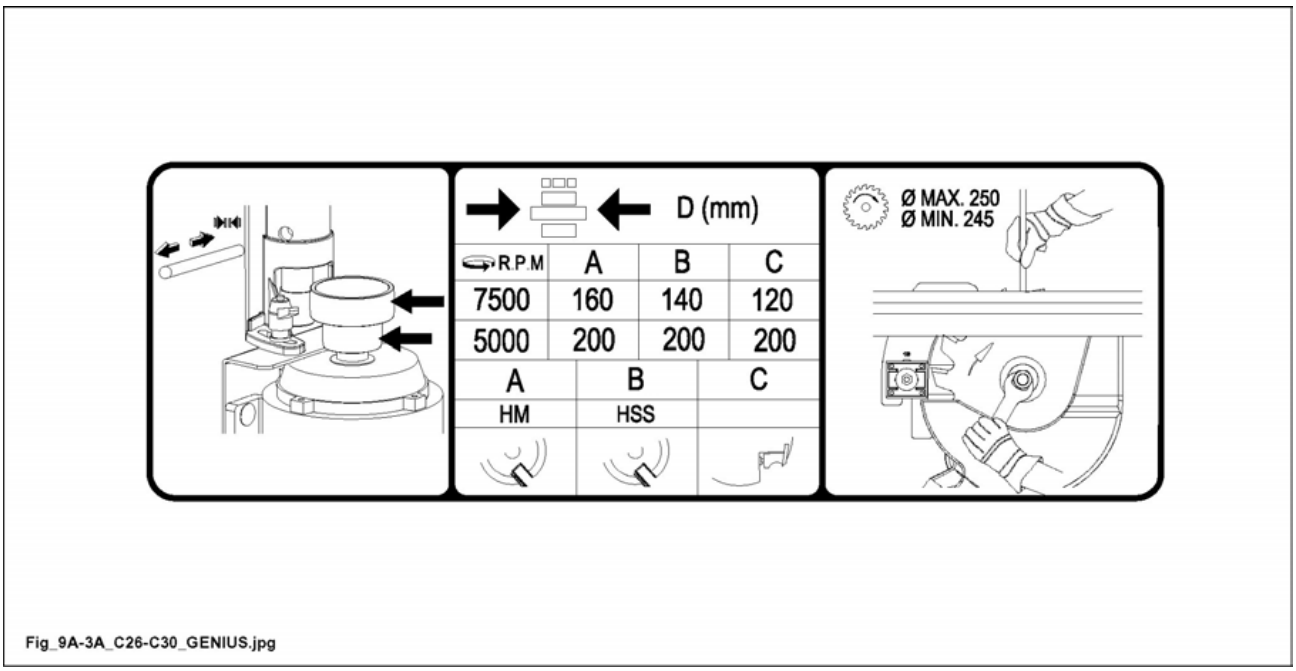

Fig. 9.3A

DANGER-WARNING:
it is prohibited to exceed the speed obtained from the plate (fig. 9.3A).

 THIS MANUAL IS PROPERTY OF SCM INDUSTRIA S.P.A - ANY TOTAL OR PARTIAL REPRODUCTION IS STRICTLY FORBIDDEN

9A.3.1 SPEED CHANGE

(cu_9a-3-1_0.0)

The spindle speeds are (50 Hz): 5000 - 7500 rpm - (60 Hz): 6000 - 8500 rpm.

Positions and relative speed are given on the plate (B fig. 9.3-1).
To select the speed move the motor belt into the proper race corresponding to the speed desired, proceeding as follows.

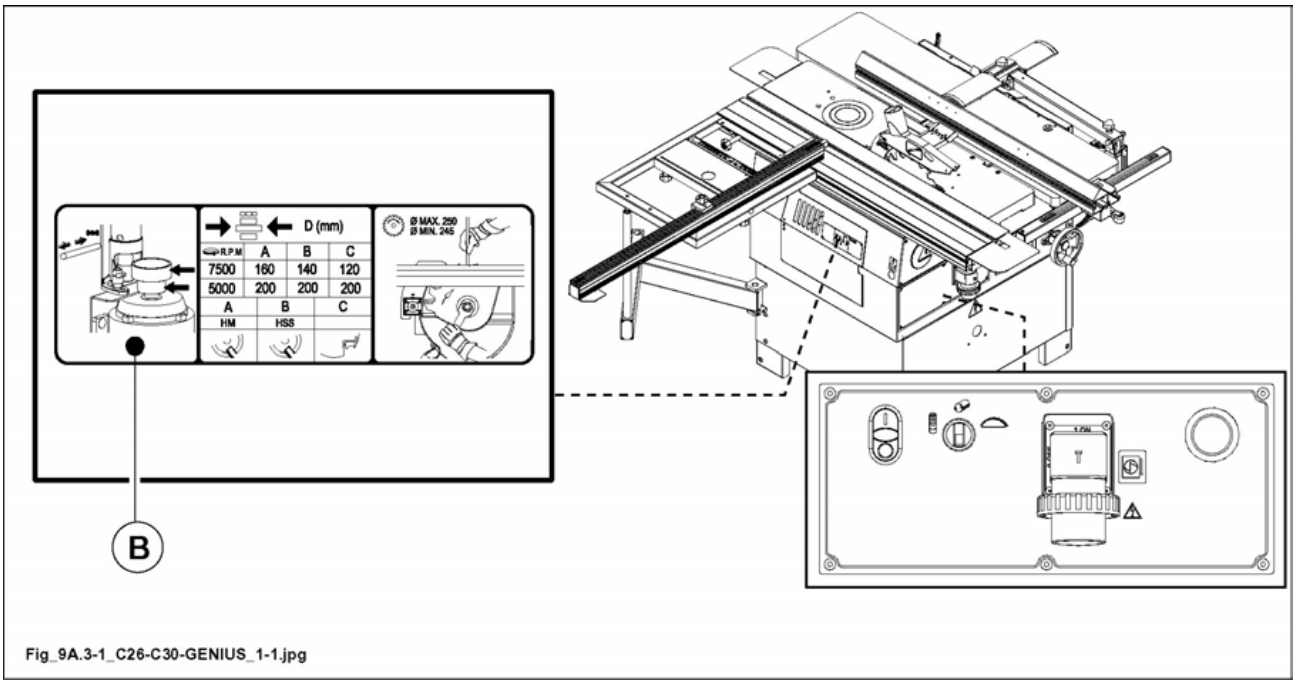

Fig. 9.3-1

DANGER-WARNING:
before starting the machine make sure that the rotation speed you have selected is proper for the working, the wood type and for the tool used on the machine.

9A.3.1.1 SPEED CHANGE

(cu_9a-3-1-1_0.0)

DANGER-WARNING:
before carrying out any of the operations make sure to cut the main electric power and disconnect socket (T fig. 9.3-1-1) from plug (S fig. 9.3-1-1).

- Open the door (V fig. 9.3-1-1) (activates a microswitch which prevents the motor from starting).
- Loosen the handle (A fig. 9.3-1-1).
- Push the motor. The belt (C fig. 9.3-1-1) is now loosened.
- Change the seat of the belt, positioning it depending on the speed to be obtained, referring to the plate (B fig. 9.3-1-1).
- Operate the motor, moving the two pulleys away and tightening the handle (A fig. 9.3-1-1).

CAUTION:
an excessive belt tightening will cause both functioning failures and belts wear beforehand.

- Close the door (V fig. 9.3-1-1).

To view speed, look at the position of the belt through door (V fig. 9.3-1-1).
Positions and speed values are shown on the data plate (B fig. 9.3-1-1).

DANGER-WARNING:
before starting the machine make sure that the rotation speed you have selected is proper for the working, the wood type and for the tool used on the machine.

DANGER-WARNING:
use of tenoner hood Ø 200 mm is enabled only at speed of 5000 rpm.

THIS MANUAL IS PROPERTY OF SCM INDUSTRIA S.P.A - ANY TOTAL OR PARTIAL REPRODUCTION IS STRICTLY FORBIDDEN

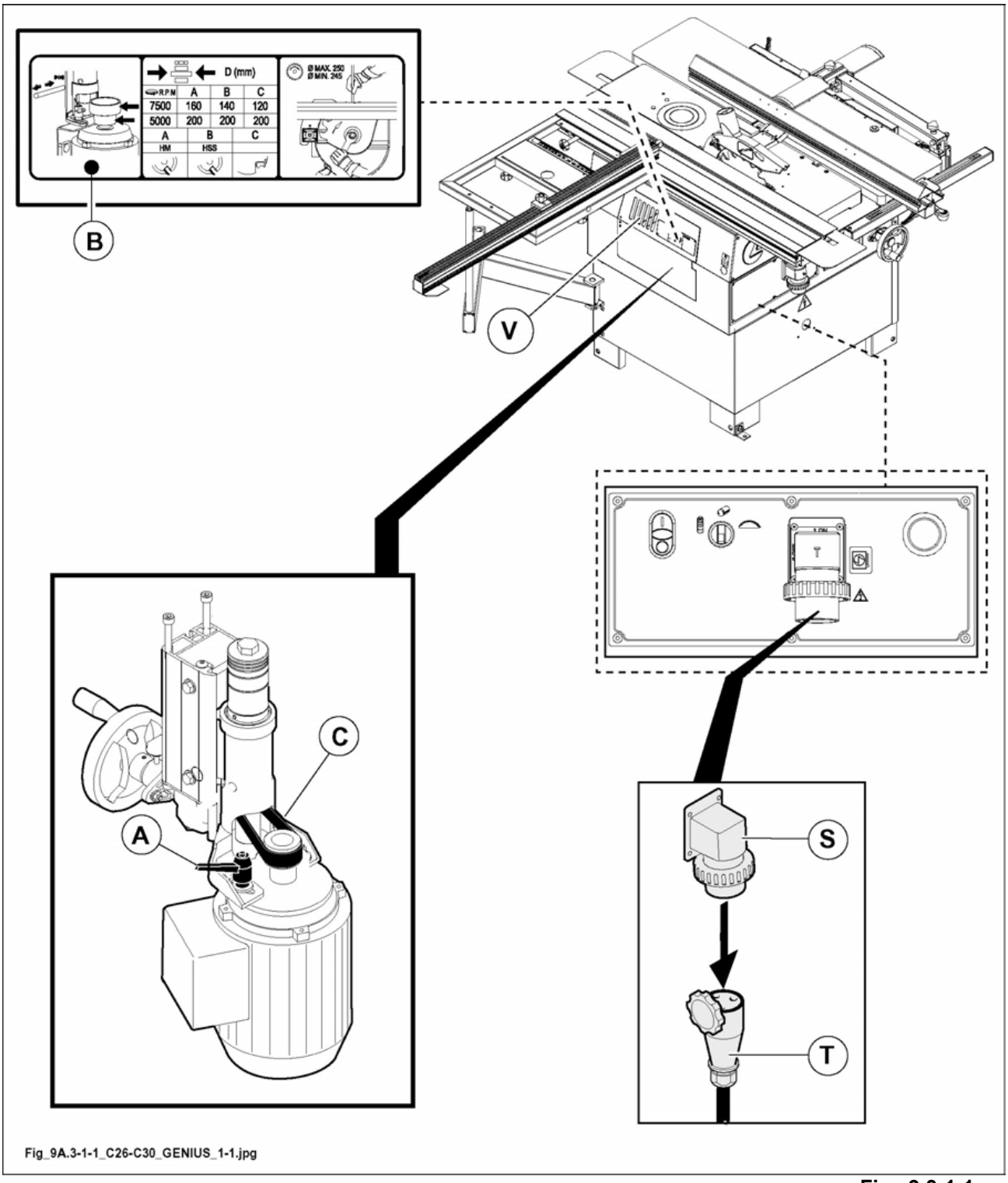
D (mm)
R.P.M
A
B
C
7500
160
140
120
5000
200
200
200
A
B
C
HM
HSS
Ø MAX. 250
Ø MIN. 245
B
V
C
A
S
T
Fig_9A.3-1-1_C26-C30_GENIUS_1-1.jpg

Fig. 9.3-1-1

9A.6 RULE ON TENONING TABLE

(genius_9a-6_0.0)

OPT

NOTE-INFORMATION:
the splinter guard is fixed to the rule with screws (V fig. 9.6).
If the splinter guard becomes worn, move it towards the tool by slackening the securing screws.
If you need to replace it, see Chapter 20.

9A.6.1 RULE ROTATION

(cu_9a-6-1_0.0)

A

1) Loosen the knob (F fig. 9.6).
2) For use, position the ruler referring to the plate (P fig. 9.6).
3) Tighten the knob (F fig. 9.6).

9A.6.2 TO MOVE THE RULE UP TO THE TOOL

(cu_9a_6-2_0.0)

B

1) Loosen the knob (F fig. 9.6).
2) Loosen grub screw (G fig. 9.6).
3) Position the ruler (R fig. 9.6) at the right distance from the tools (U fig. 9.6).
4) Tighten grub screw (G fig. 9.6) again.
5) Tighten the knob (F fig. 9.6).

 THIS MANUAL IS PROPERTY OF SCM INDUSTRIA S.P.A - ANY TOTAL OR PARTIAL REPRODUCTION IS STRICTLY FORBIDDEN

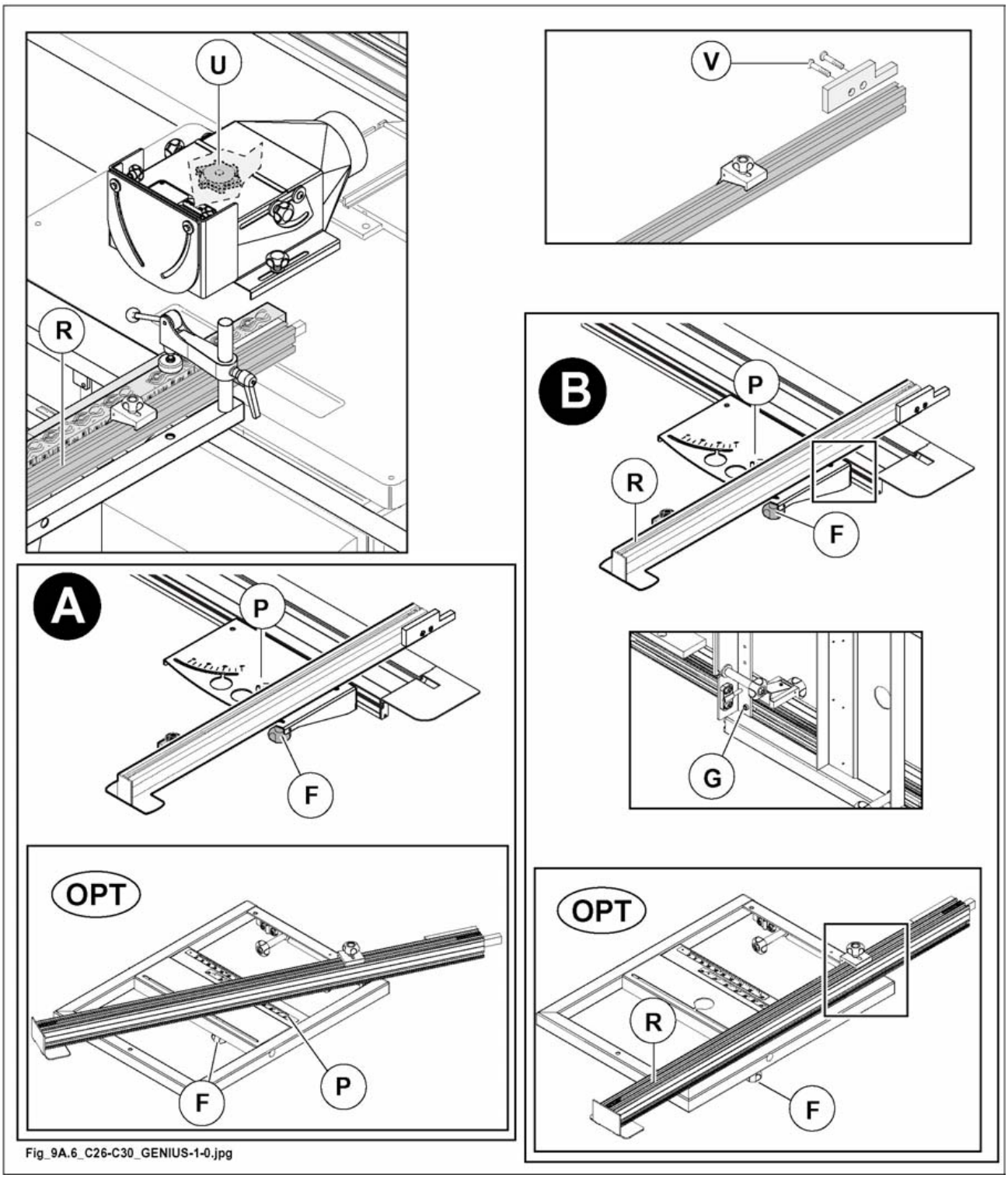

Fig. 9.6

9A.8 USING THE TENONING TABLE

(cu_9a-8_0.0)

OPT

Tenoning is a head milling operation (against the grain) which is carried out to obtain joints between male tenons (A fig. 9.8) and female tenons (B fig. 9.8).
Carry out this operation with sliding table after fitting additional table OPT (O fig. 9.8) and positioning fence (P fig. 9.8) with the chip shield as shown in section 4.3.24.2.

DANGER-WARNING:
always lock the piece using the presser provided;
tenoning must exclusively be carried out with a spindle rotation speed of 5000 rpm (50 Hz) - 6000 rpm (60 Hz).

For a better assembly:
- *adjust the tenon depth 0,5 mm less than the jamb width (X fig. 9.8);*
- *adjust the slot depth 0,5 mm less than the crosspiece width (Y fig. 9.8).*

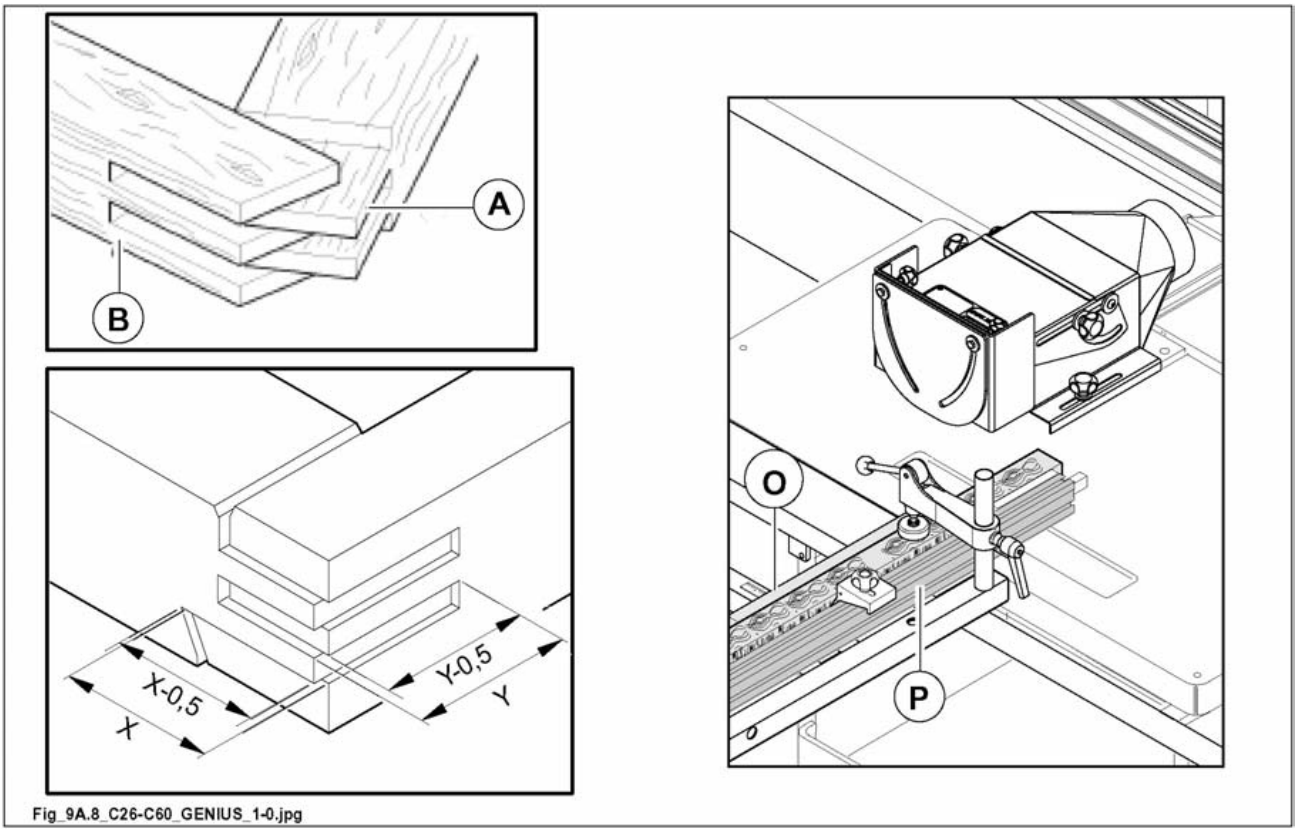

Fig. 9.8

 THIS MANUAL IS PROPERTY OF SCM INDUSTRIA S.P.A - ANY TOTAL OR PARTIAL REPRODUCTION IS STRICTLY FORBIDDEN

(vuota_cu_02)

9A.8.1 TENONING

(cu_9a-8-1_0.0)

- Fit the tenoning hood and set it as described in paragraph 9.44.
- Position the ruler in such a way that the pin (E fig. 9.8-1) fits into place against the device (S fig. 9.8-1). To move the rule loosen knob (M fig. 9.8-1).
- Rest the workpiece against rule (G fig. 9.8-1), so that its projection to the tool is larger than the tenoning depth.

DANGER-WARNING:
make sure that no contact between tenoning table and tool is possible.

- Clamp the workpiece with the presser foot (P fig. 9.8-1) by lowering the lever (D fig. 9.8-1).

9A.8.1.1 CLAMPING ARM USE

(cu_9a-8-1-1_0.0)

- For height adjusting loosen handle (C fig. 9.8-1).
- By means of lever (D fig. 9.8-1) lower foot (P fig. 9.8-1) to clamp the piece.

DANGER-WARNING:
always lock the piece using the presser provided.

 THIS MANUAL IS PROPERTY OF SCM INDUSTRIA S.P.A - ANY TOTAL OR PARTIAL REPRODUCTION IS STRICTLY FORBIDDEN

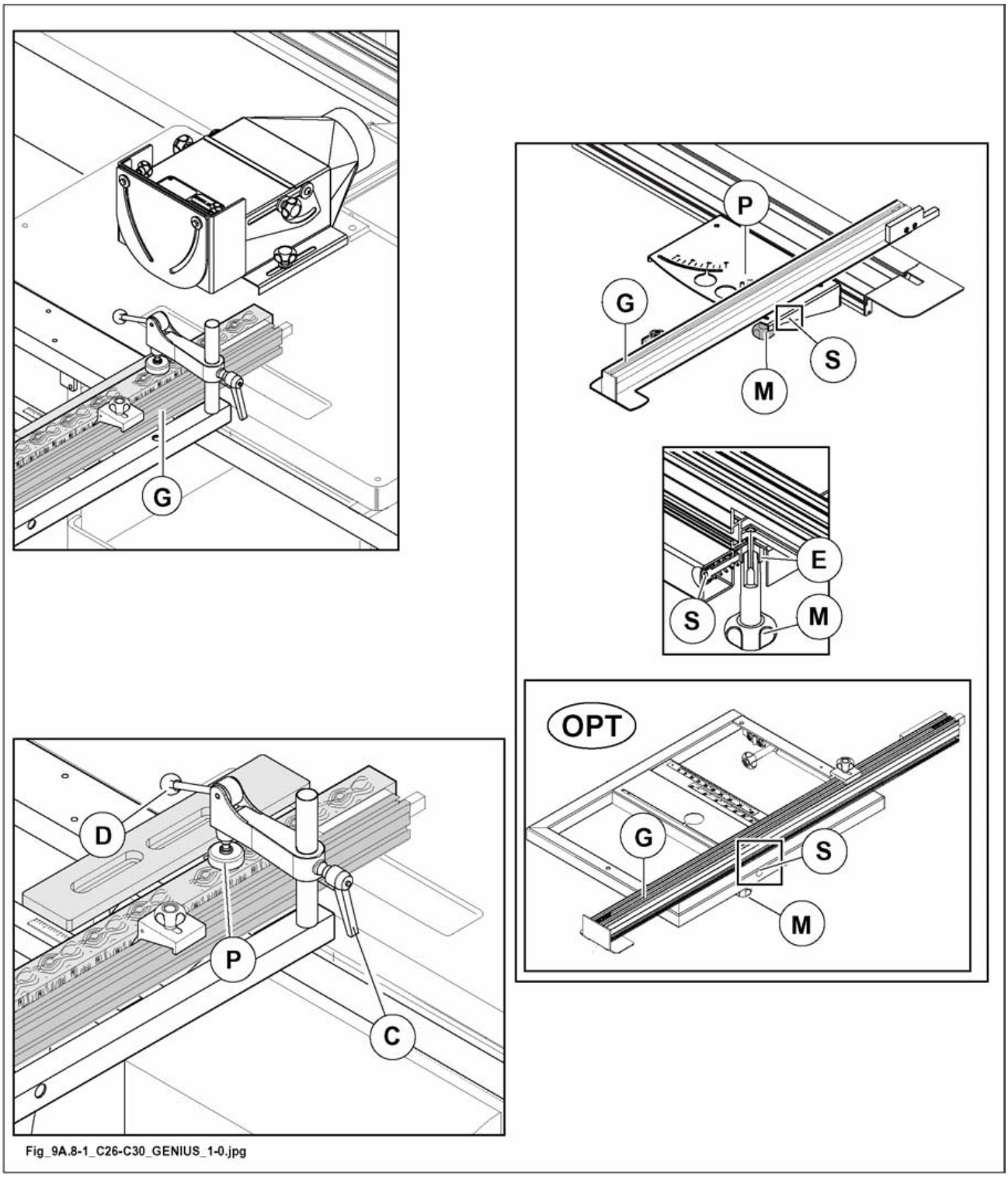

Fig. 9.8-1

9A.8.2 OBLIQUE TENONS

(cu_9a-8-2_0.0)

The working of oblique tenons is quick, because it is sufficient to turn rest rule (G fig. 9.8-2) clockwise.

- Loosen the knob (F fig. 9.8-2).
- Turn the rule to the desired angle clockwise (+ / index 1) then read the value directly on scale (T fig. 9.8-2) applied on the table.
- Tighten the knob (F fig. 9.8-2).

The rule (G fig. 9.8-2) can slide if the knob (F fig. 9.8-2) is released.
This adjustment may be needed to suit the various cutter diameters.

9A.8.2.1 CLAMPING ARM USE

(cu_9a-8-2-1_0.0)

- For height adjusting loosen handle (C fig. 9.8-2).
- By means of lever (D fig. 9.8-2) lower foot (P fig. 9.8-2) to clamp the piece.

DANGER-WARNING:
always lock the piece using the presser provided.

 THIS MANUAL IS PROPERTY OF SCM INDUSTRIA S.P.A - ANY TOTAL OR PARTIAL REPRODUCTION IS STRICTLY FORBIDDEN

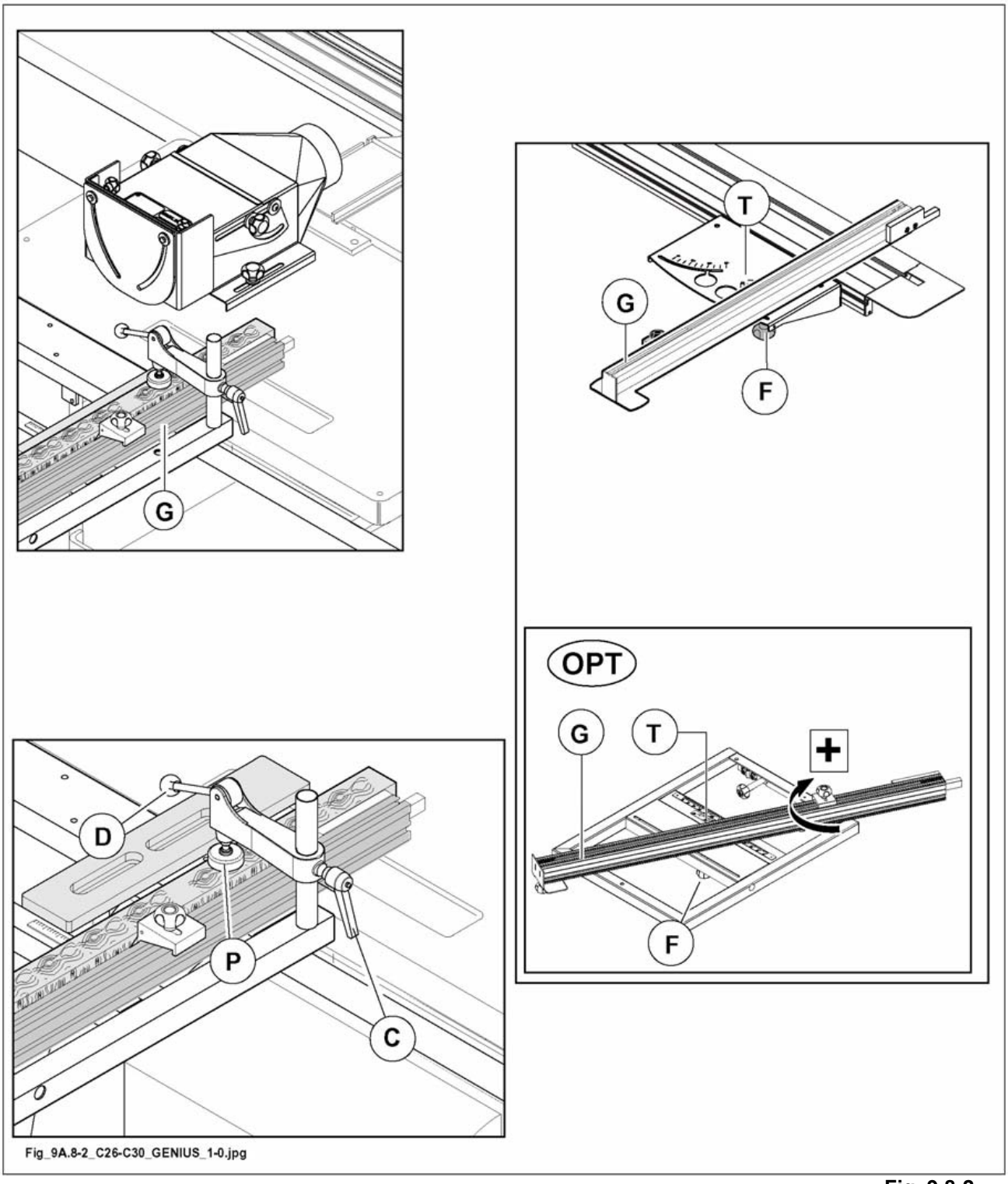

Fig. 9.8-2

9A.33 ADJUSTABLE HOOD-FENCE UNIT

(cu_9-33_0.0)

SAFETY OVER ALL

DANGER-WARNING:
all adjusting operations shall be carried out with standstill spindle.

DANGER-WARNING:
Check that the spindle speed does not excede the max. speed permitted for the used tool. Otherwise see paragraph about speed change.

The tool shall rotate in the right direction.

The operator shall make sure that the spindle can rotate in the direction desired and that the piece feed occurs in the direction contrary to the spindle rotation one.

Use roller conveyors or extension tables (not supplied by SCM***) when machining very long pieces.***

Before working always adjust vertical and horizontal pressure shoe to form a protection of the hands and against eventual ejection of splits and tool parts (see paragraph 9.50).

Before starting the machine make sure that the tools do not touch the parts of the machine.

After every adjustment always close the top cover of moulder hood.

It is prohibited to mount tools with a diameter greater than indicated in Chap. 3.

Machining with the router fence hood should be carried out while keeping the two support tables in their closest possible position, to prevent the tool from carrying the workpiece along. Before proceeding with machining, adjust the router hood and the pressers as indicated (Par. 9A.33).

 THIS MANUAL IS PROPERTY OF SCM INDUSTRIA S.P.A - ANY TOTAL OR PARTIAL REPRODUCTION IS STRICTLY FORBIDDEN

The positioning and adjustment of the spindle moulder fence changes according to the type of operation to be carried out.

When profiling the entire side of workpiece half-fence (B) shall be alignad with tool (1 fig. 9.33A)

If profiling is not done on the entire side, but only on a part, the two fences A and B must be aligned (2 fig. 9.33A)

Adjust the guides A and B on the basis of the processing as indicated as follows.
Position the hood on the working table and screw the two knobs (C,G fig. 9.33A) into their special holes.

DANGER-WARNING:
the two fences must be adjusted so the workpiece is stable at both infeed and outfeed.

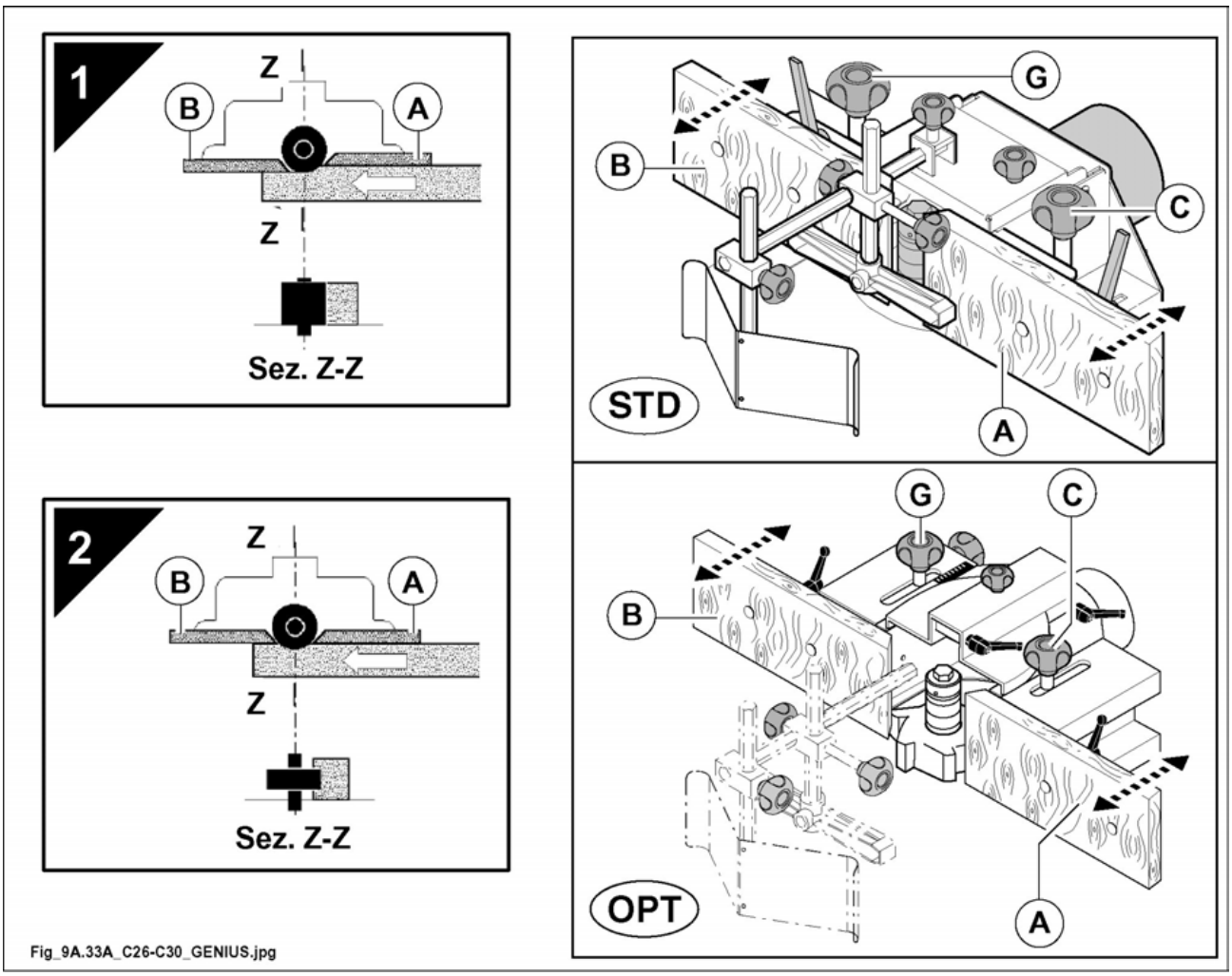

Fig. 9.33A

9A.33.1 ADJUST SPINDLE MOULDER HOOD GUIDE FOR MOULDING WITHOUT REMOVAL

(cu_9a-33-1_0.0)

Simultaneous adjustment of the guides A and B (fig. 9.33-1).

- Adjust fence (A fig. 9.33-1) by means of knob (E fig. 9.33-1) after loosening knob (C fig. 9.33-1).
- Adjust fence (B fig. 9.33-1) by means of knob (E fig. 9.33-1) after loosening knob (G fig. 9.33-1).

- The fence halves (A and B fig. 9.33-1) must be as near the tool as possible (about 2-3 mm). To make this adjustment loosen handles (D fig. 9.33-1) behind the fence halves.

NOTE-INFORMATION:
for this operation the fence halves shall be aligned with one another.
Read the deviation between the two tables on index (H fig. 9.33-1). When the index is positioned on "0", the fences are aligned.

- When the adjustment has been carried out, tighten the knobs C and G (fig. 9.33-1).

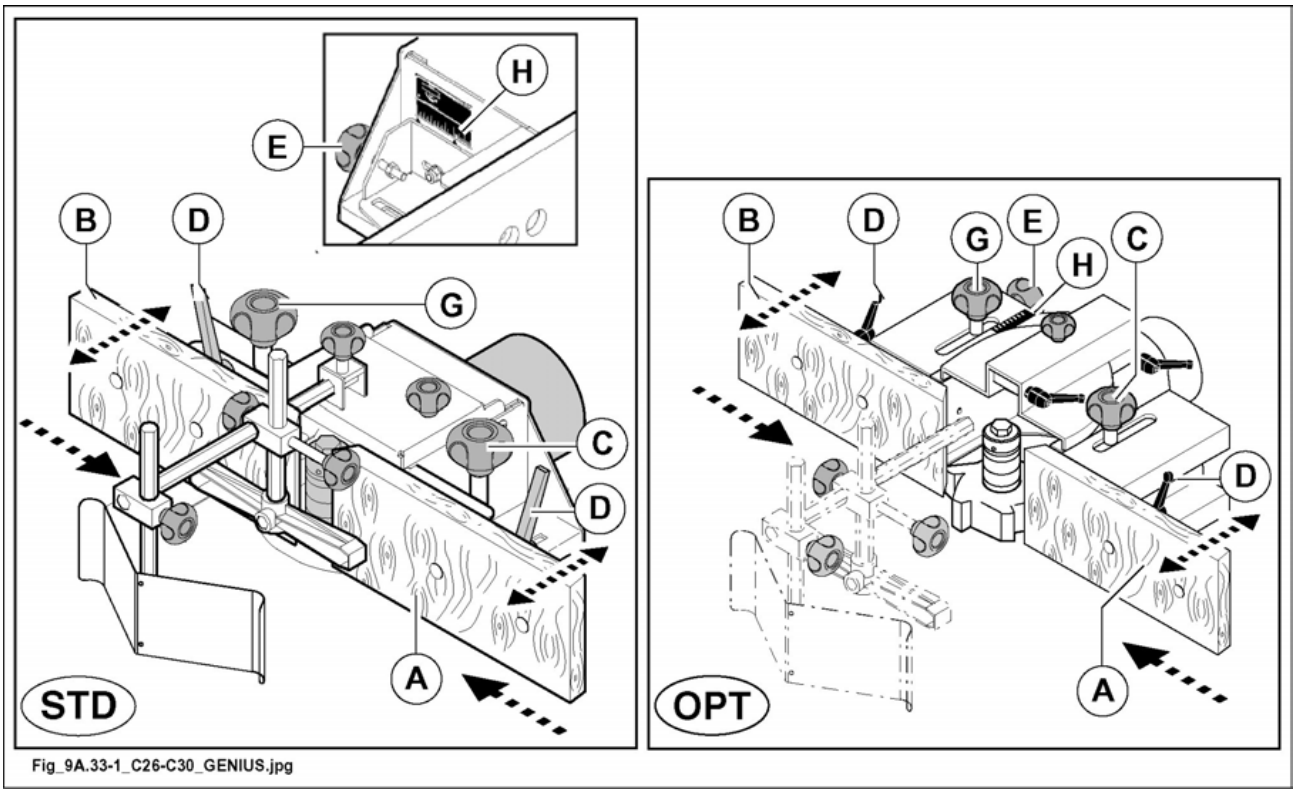

Fig. 9.33-1

 THIS MANUAL IS PROPERTY OF SCM INDUSTRIA S.P.A - ANY TOTAL OR PARTIAL REPRODUCTION IS STRICTLY FORBIDDEN

(st_09_03)

9A.33.2 ADJUST SPINDLE MOULDER HOOD FOR MOULDING WITH REMOVAL.

(cu_9a-33-2_0.0)

- After loosening knobs (G, C fig. 9.33-2) move the entire hood- fence unit to the most suitable position for the depth of cut required, then tighten the knobs.

- The fence halves (A and B fig. 9.33-2) must be as near the tool as possible (about 2-3 mm). To make this adjustment loosen handles (D fig. 9.33-2) behind the fence halves.

For further micrometric adjustment of the depth of cut set the fence half (A fig. 9.33-2) as follows:

- slacken the knob (C fig. 9.33-2).
- Turn knob (E fig. 9.33-2) to find the correct position: indicator (H fig. 9.33-2) indicates the adjusting measure.
- When the adjustment has been carried out, tighten the knob (C fig. 9.33-2).

For micrometric adjustment of fence half (B fig. 9.33-2):

- slacken the knob (G fig. 9.33-2).
- Turn knob (E fig. 9.33-2) and with a bar check the alignment of the fence half with the tool.
- When the adjustment has been carried out, tighten the knob (G fig. 9.33-2).

NOTE-INFORMATION:
Read the deviation between the two tables on index (H fig. 9.33-2). When the index is positioned on "0", the fences are aligned.

 THIS MANUAL IS PROPERTY OF SCM INDUSTRIA S.P.A - ANY TOTAL OR PARTIAL REPRODUCTION IS STRICTLY FORBIDDEN

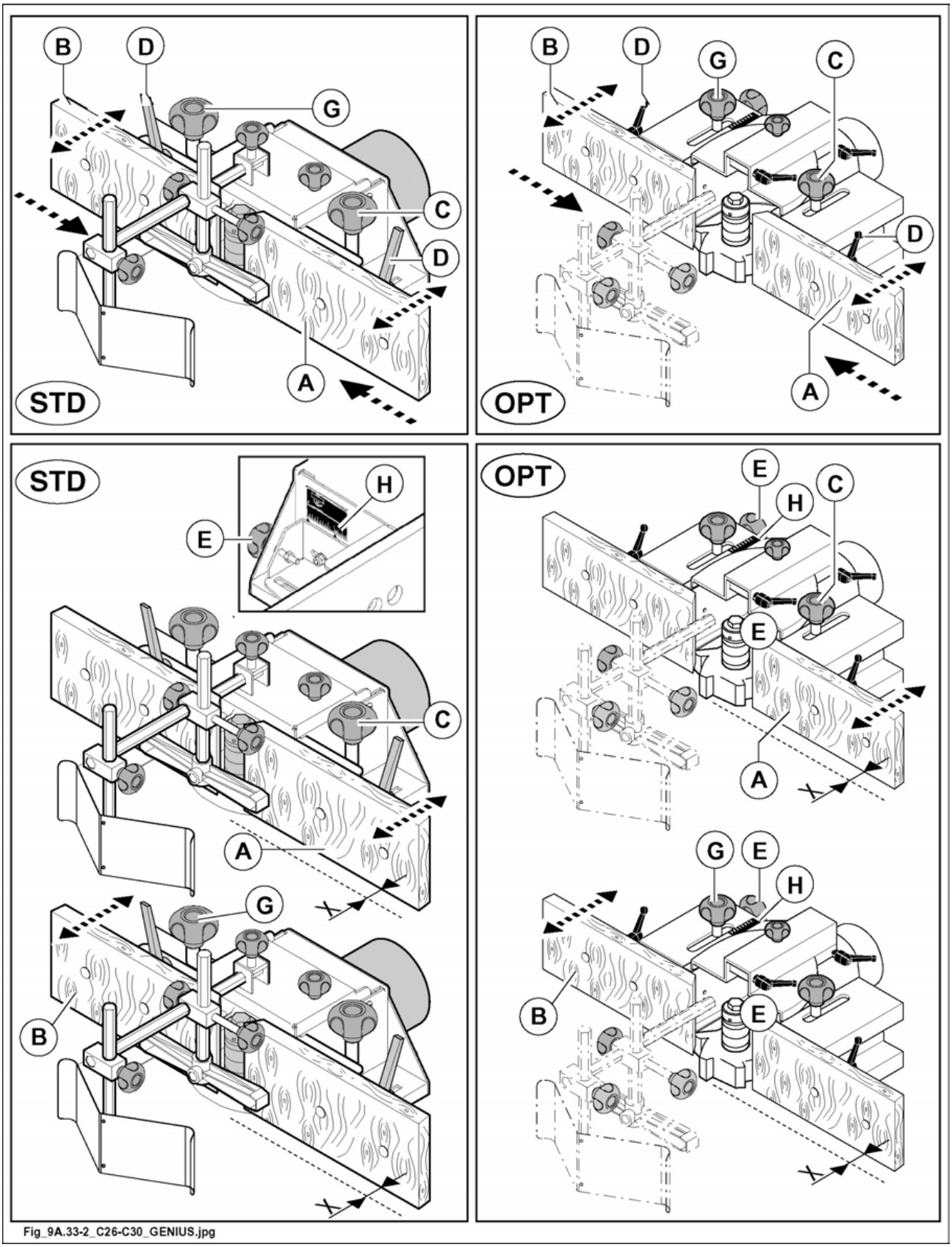
B
D
G
C
D
A
STD
B
D
G
C
D
A
OPT
STD
H
E
C
A
G
B
OPT
E
H
C
E
A
G
E
H
B
E
Fig_9A.33-2_C26-C30_GENIUS.jpg

Fig. 9.33-2

9A.33.3 USE OF HOOD-FENCE FOR SMALL PIECES

(cu_9a-33-3_0.0)

When repetitive or special operations must be carried out, it is recommended to make a counterfence to be applied to the router hood, opened to let the tool through. The counterguide must be secured to the two tables by means of the 2 convex-head screws and 2 m8 nuts (fig. 9.33-3).

To mill the passage opening proceed in this way:

- **set horizontal pressure shoe (C fig. 9.33-3) in order to protect the operator against eventual ejection of splits and tool parts.**
- **Move the entire hood-fence unit backwards very slowly, up to opening of passage.**

DANGER-WARNING:
do not use inserts with openings larger than the tool thickness.

DANGER-WARNING:
after each adjustment, always remember to close the upper cover on the moulder hood and position the pressers unit (see par. 9.50).

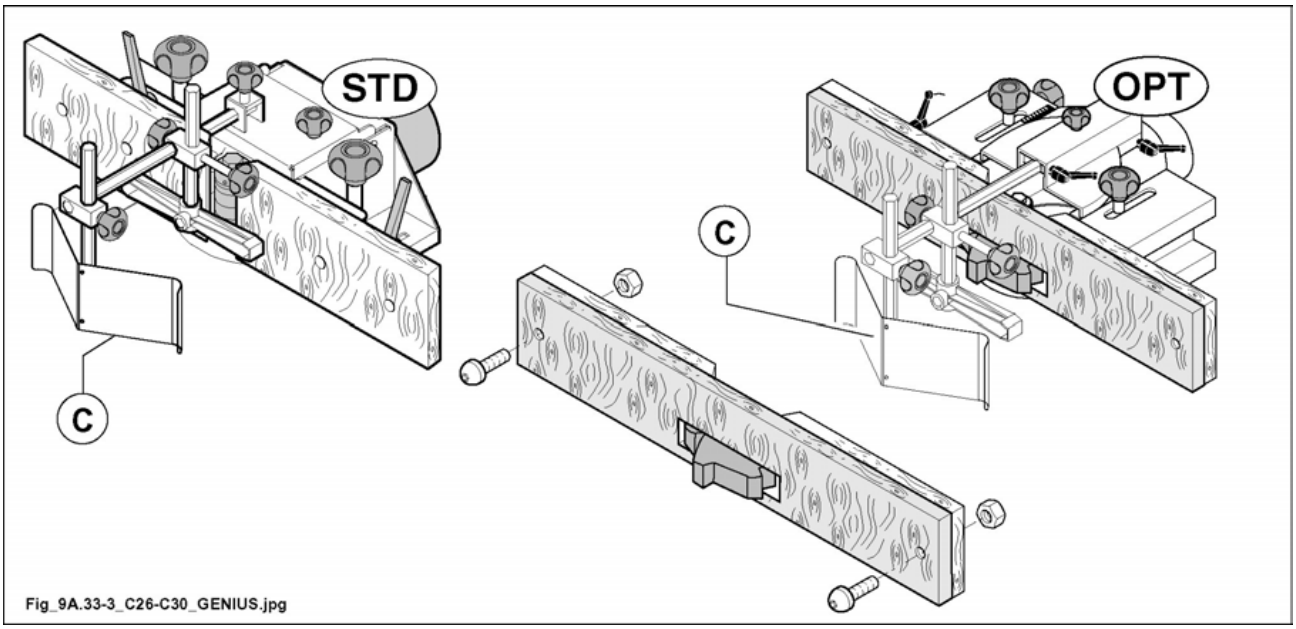

Fig. 9.33-3

 THIS MANUAL IS PROPERTY OF SCM INDUSTRIA S.P.A - ANY TOTAL OR PARTIAL REPRODUCTION IS STRICTLY FORBIDDEN

9A.33.5 WORKING EXAMPLES

(cu_9a-33-5_0.0)

Profiling

It is carried out along the wood grain on straight pieces. During the feed motion the entire workpiece shall be in contact with both half-fences of the moulder fence.

CAUTION:
before proceeding with machining, adjust the router hood and the pressers as indicated in paragraph 9A.33.
Before starting work check the various fittings.
Connect fitting (4 fig. 9.33-5A) to the suction system.

DANGER-WARNING:
the piece being machined must always be fed using the wood thrust provided (A fig. 9.33-5A).

Start the system and machine asample workpiece. Check the profile height and depth using a gauge. A good finishing requires a milling with constant feed.

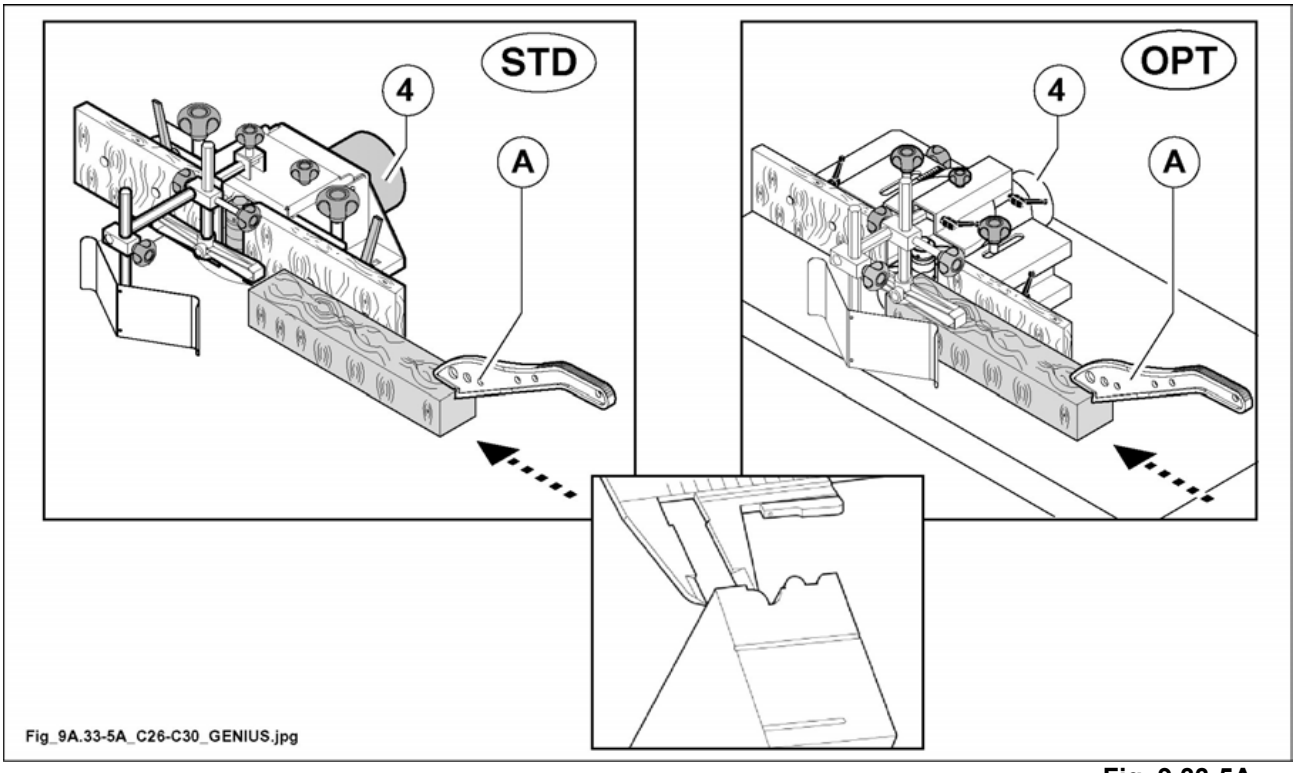

Fig. 9.33-5A

For dead milling cuts (H fig. 9.33-5D) and the machining of short pieces, it is necessary to fi t the stops (A fig. 9.33-5D) and (B fig. 9.33-5D) (not supplied) onto the input fence and the half–fence.
The stops must be fastened ontothe fences (D fig. 9.33-5D) by means of the screws (C fig. 9.33-5D).

To perform the machining, proceed as follows:
- prepare the machine;
- start the moulder shaft;
- rest the wood piece against the stops (A fig. 9.33-5D) and push it against the milling cutter;
- move the piece forward to the stop (B fig. 9.33-5D).

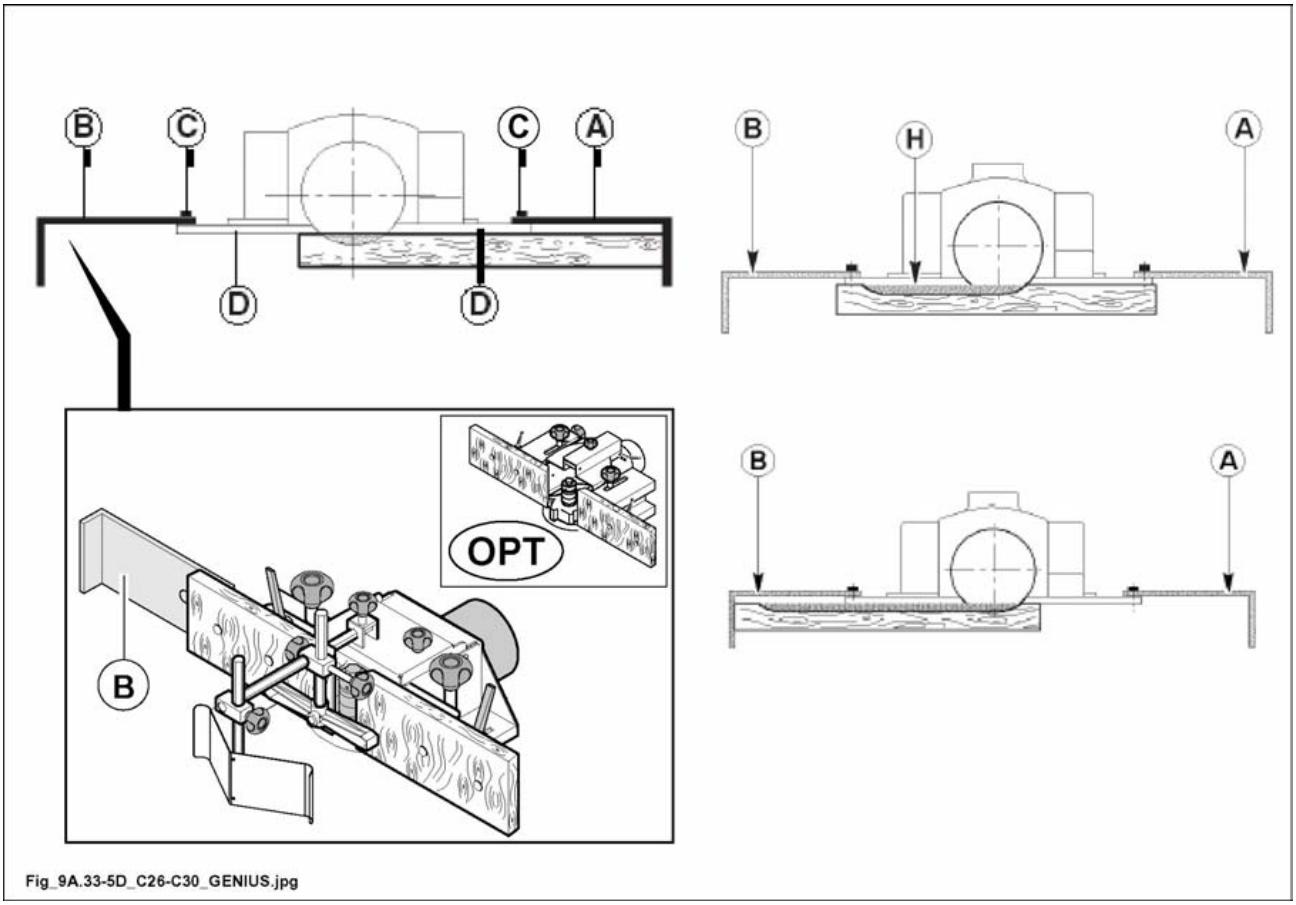

Fig. 9.33-5D

 THIS MANUAL IS PROPERTY OF SCM INDUSTRIA S.P.A - ANY TOTAL OR PARTIAL REPRODUCTION IS STRICTLY FORBIDDEN

Rabbeting

It is the external profiling (P fig. 9.33-5F) of a frame. This operation may be carried out with the workpiece on the machine table and against the moulder fence or clamped to the sliding table.

It is better to begin from a crosspiece then turn the frame 90° every time in order to eliminate the chipping obtained in the previous stroke, then work the jamb in the wood grain direction (1 fig. 9.33-5F).

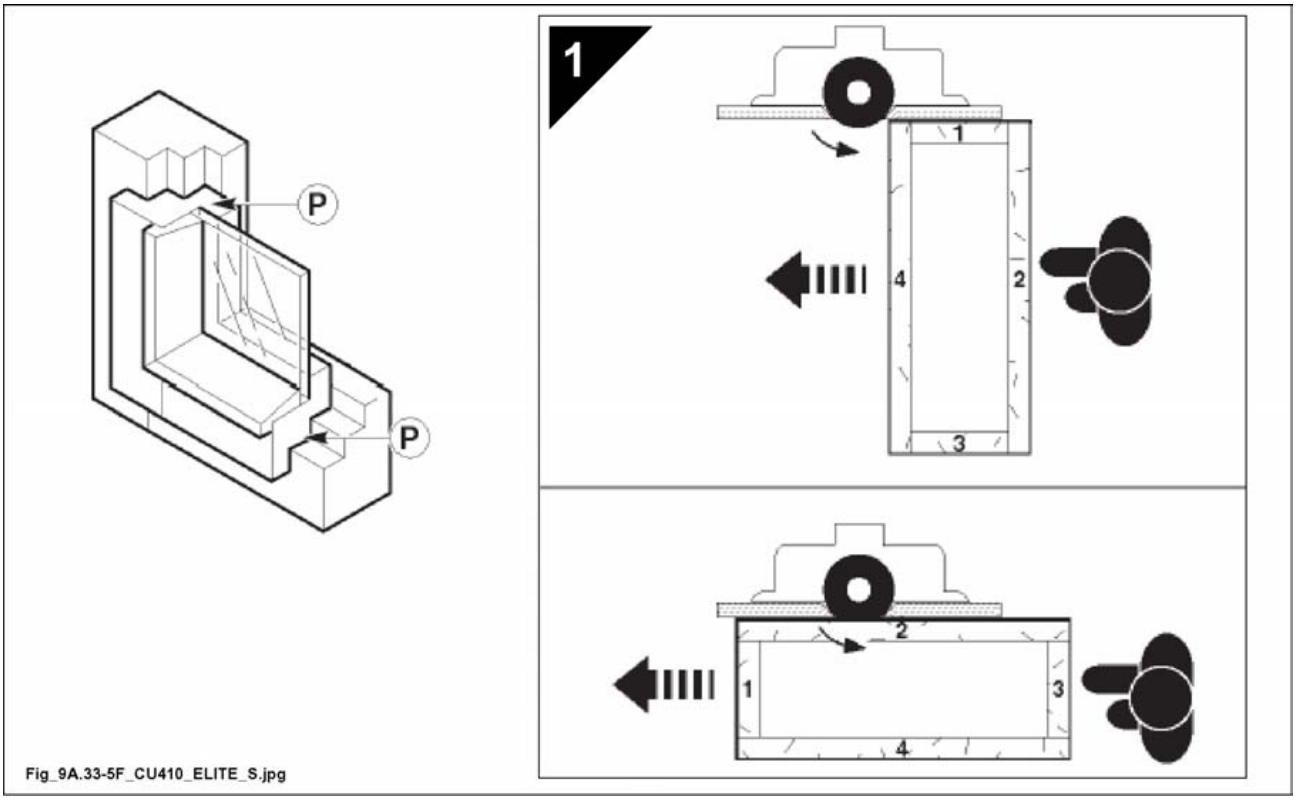

Fig. 9.33-5F

9A.44 TENONING HOOD

(cu_9a-44_0.0)

OPT

COMPONENTS

(1 fig. 9.44) - Knobs for locking the hood on the table

(2 fig. 9.44) - Knobs for locking the shield

(3 fig. 9.44) - Cover

(4 fig. 9.44) - Ø 120 mm suction pipe

(5 fig. 9.44) - Shield

(6 fig. 9.44) - Knobs for locking the cover

9A.44.1 ADJUSTING

(cu_9a-44-1_0.0)

OPT

- Rest the hood on the table in the position proper for the milling depth required, the fasten it by tightening knobs (1 fig. 9.44).
- To protect the upper part of the tool adjust the upper part of the hood by turning the knobs (6 fig. 9.44).

DANGER-WARNING:
before starting the machine close cover (3 fig. 9.44).
Make sure that the tools do not touch any machine part.

THIS MANUAL IS PROPERTY OF SCM INDUSTRIA S.P.A - ANY TOTAL OR PARTIAL REPRODUCTION IS STRICTLY FORBIDDEN

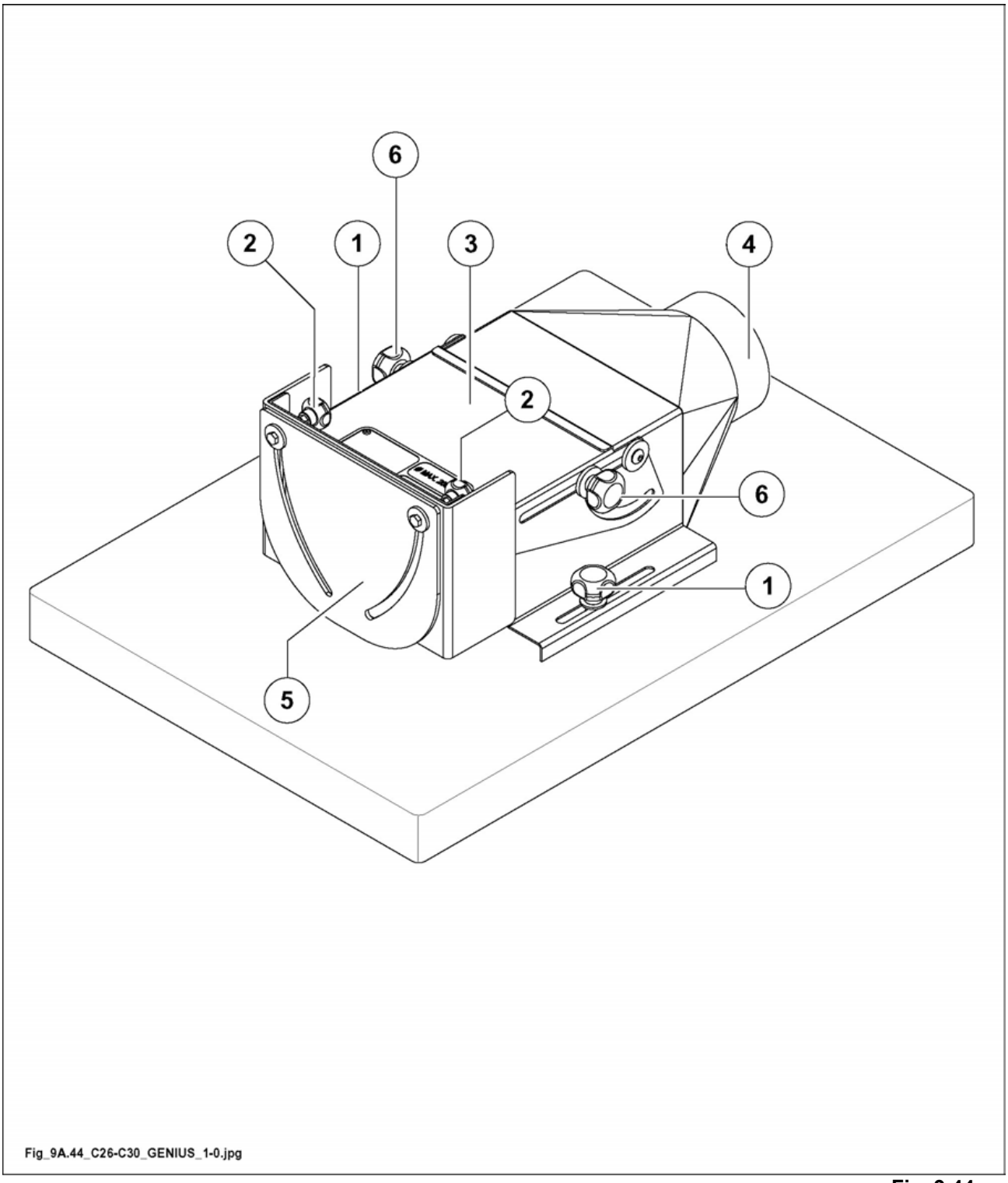

Fig. 9.44

9A.50 PRESSURE UNIT FOR PROFILING

(cu_9a-50_0.0)

Components (fig. 9.50):

1) - Horizontal pressure shoe

2) - Vertical pressure shoe

3) - Support

4) - Knobs for presser adjusting

5) - Knobs for presser adjusting

6) - Knobs for presser adjusting

7) - Pusher

8) - Handle for presser adjusting

DANGER-WARNING:
the vertical and horizontal pressure shoes , fastened to the support, are an efficient protection for the operator's hands and against the eventual ejection of splits or tool parts.

DANGER-WARNING:
all adjustments must be carried out with the shaft stopped.

THIS MANUAL IS PROPERTY OF SCM INDUSTRIA S.P.A - ANY TOTAL OR PARTIAL REPRODUCTION IS STRICTLY FORBIDDEN

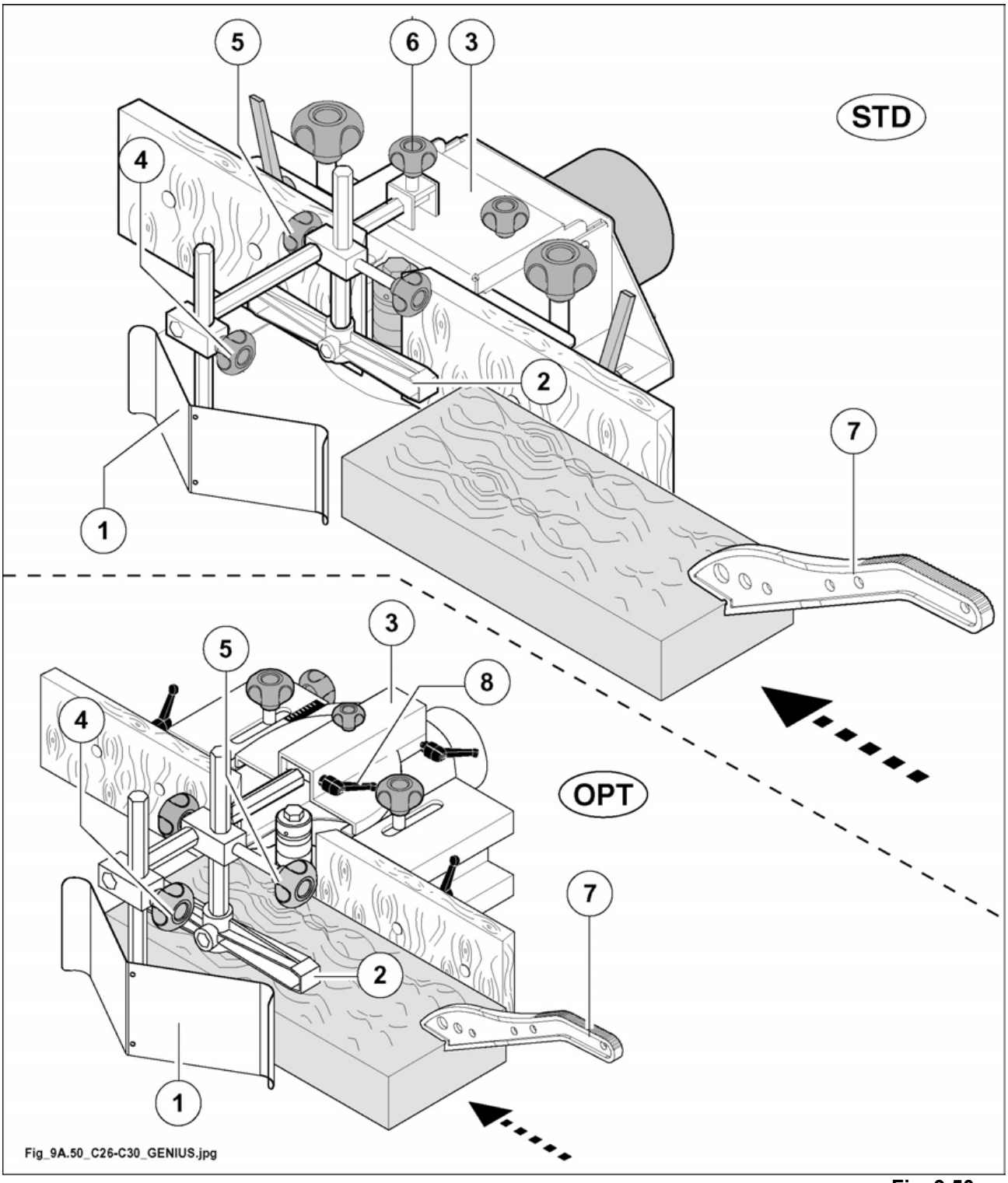

Fig. 9.50

9A.50.1 ADJUSTING

(cu_9a-50-1_0.0)

Before working adjust the pressure exerted by vertical and horizontal pressure shoes.

The workpiece shall easly move without shocks between pressure shoes and fence halves, therefore the pressure shall be not too strong.

- Adjust fence halves (A e B fig. 9.50-1) according to the external cutter diameter.

Adjust the position of the horizontal presser (1 fig. 9.50-1) and the vertical presser (2 fig. 9.50-1) resting it on the piece to be machined and proceed as follows:

- slacken the knob (G fig. 9.50-1) and transversally adjust the presser belt (1 fig. 9.50-1) on the basis of the width of the wood to be processed.
- When the adjustment has been carried out, tighten the knob.
- Loosen the knobs (L fig. 9.50-1) and (M fig. 9.50-1) and position the vertical presser (2 fig. 9.50-1) on the wood maintaining it is close as possible to the cutter.
- Lock the knobs (L fig. 9.50-1) and (M fig. 9.50-1) when the adjustment has been completed.

Adjust the pressure shoes in order to protect the operator against eventual ejection of splits or tool parts.

NOTE-INFORMATION:
after every adjustment make sure that the knobs are tight.

DANGER-WARNING:
use flat pusher (9 fig. 9.50-1) to make the piece passage under horizontal pressure shoe (1 fig. 9.50-1) easier.

NOTE-INFORMATION:
the min. section of the workpiece which may be pressed is 8x8 mm on the entire length.

CAUTION:
turn the tool after carrying out all adjustments in order to avoid any contact with machine parts or with the guard.

THIS MANUAL IS PROPERTY OF SCM INDUSTRIA S.P.A - ANY TOTAL OR PARTIAL REPRODUCTION IS STRICTLY FORBIDDEN

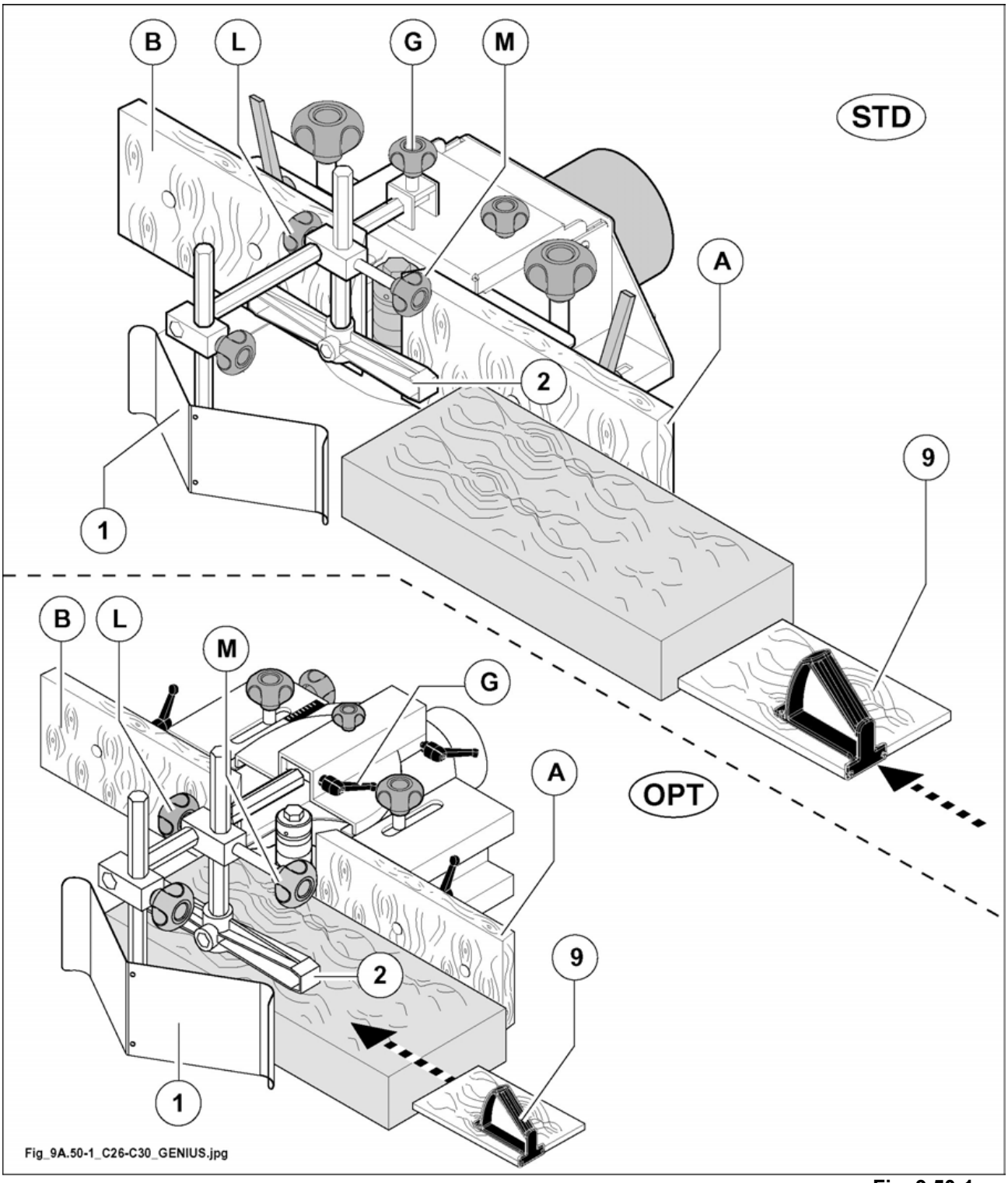

Fig. 9.50-1

9A.55 GUARD FOR MILLING AT THE SPINDLE

(cu_9a-55_0.0)

SAFETY OVER ALL

This device (supplied as a STD accessory) is used for milling pieces with shaped, curved edges or ring-shaped edges.

The right use permits shaping operations in safe conditions.

BEFORE STARTING THE WORKING YOU MUST HAVE ON THE FOLLOWING PERSONAL PROTECTIVE MEANS:

A - Proper aprons, e.g: aprons made of double leather with synthetic fiber cloth insertion (not supplied by SCM) to protect the operator in case of splinters ejection.
B - Glasses or protective shields for your eyes.

9A.55.2 ADJUSTING

(cu_9a-55-2_0.0)

DANGER-WARNING:
all adjusting operations are to be carried out with standstill spindle.

WORKING DEPTH

- loosen the knob (H fig. 9.55-2A) and act on the knob (M fig. 9.55-2A) to make micrometric adjustments;
- tighten the knob (H fig. 9.55-2A).

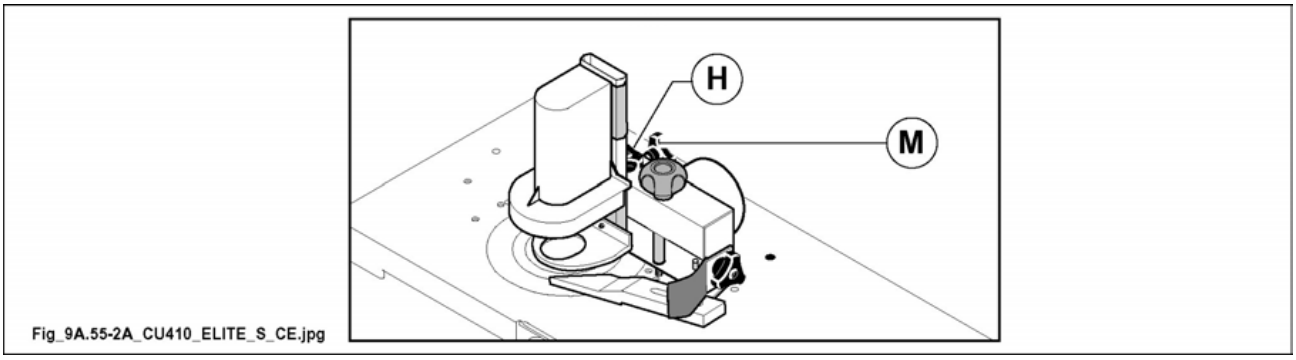

Fig. 9.55-2A

 THIS MANUAL IS PROPERTY OF SCM INDUSTRIA S.P.A - ANY TOTAL OR PARTIAL REPRODUCTION IS STRICTLY FORBIDDEN

TRACER RESTS - HEIGHT ADJUSTMENT

- loosen the knob (C fig. 9.55-2C) or the screws (B fig. 9.55-2C) and adjust the rest (D fig. 9.55-2C) to the desired height;
- relock when adjustment has been completed.

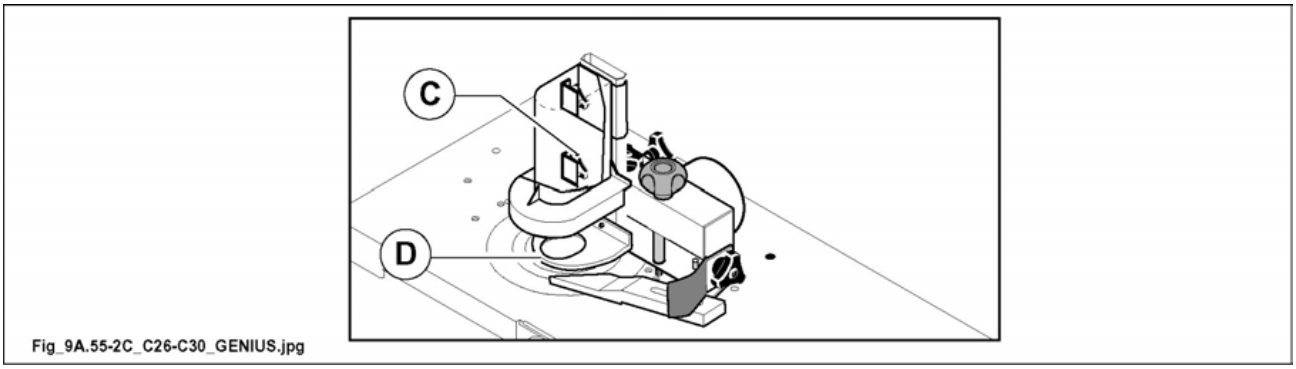

Fig. 9.55-2C

PRESSER

- loosen the knob (E fig. 9.55-2D) or the screws (A fig. 9.55-2D) and adjust the presser (G fig. 9.55-2D) in such a way that it exercises slight pressure on the piece to be machined;
- relock when adjustment has been completed.

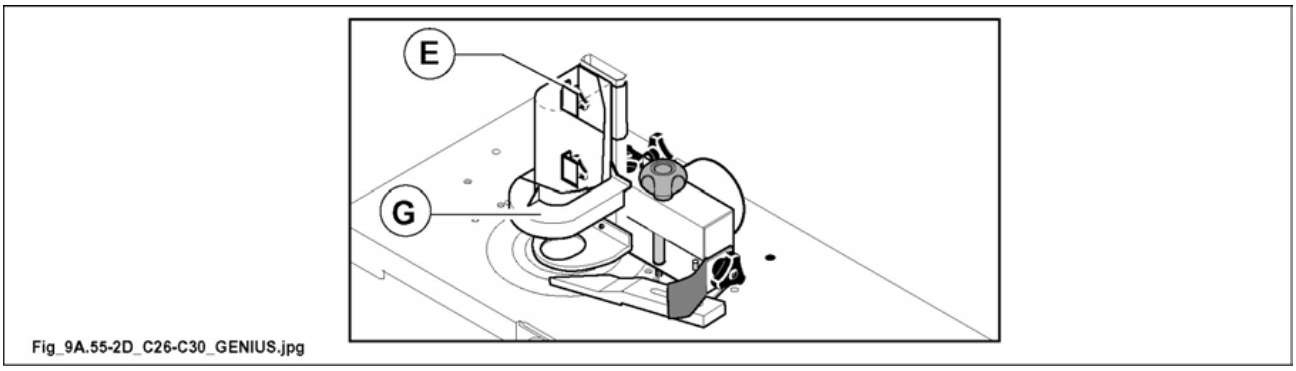

Fig. 9.55-2D

9A.55.3 WORKING EXAMPLES

(cu_9a-55-3_0.0)

This operation is carried out for obtaining profiles along bent lines. The shaping is carried out by means of the milling cutter (A fig. 9.55-3) and the copying ring (D fig. 9.55-3) fitted on the hood (C fig. 9.55-3).

CAUTION:
adjust the hood as indicated in paragraph 9A.55-2.
Before starting work check the various fittings and turn the tool manually to prevent possible contact with fixed parts.
Connect fitting (4 fig. 9.55-3) to the suction system.

For machining proceed by placing the profile on the guide (E fig. 9.55-3), firmly fixed to the support and push it up to the reference (H fig. 9.55-3) stamped on the rest.
Thus progressive attachment is obtained until maximum cutting depth.

The reference (H fig. 9.55-3) indicates the point of maximum cutting depth.

NOTE-INFORMATION:
to obtain regular removal the whole machining process must be carried out in correspondence to the reference (H fig. 9.55-3).
As a material for the template (P fig. 9.55-3) use a multilayer panel; the template shall be equipped with clamps (S fig. 9.55-3).

DANGER-WARNING:
set the clenched fists flat on the piece and push it forward by resting it against fence (E fig. 9.55-3) or against the straight part of the steady rest.

In case of milling against the wood grain or in tranverse direction to the wood grain (dangerous situation), you have to reduce the feed motion to avoid the wood fiber rupture.

 THIS MANUAL IS PROPERTY OF SCM INDUSTRIA S.P.A - ANY TOTAL OR PARTIAL REPRODUCTION IS STRICTLY FORBIDDEN

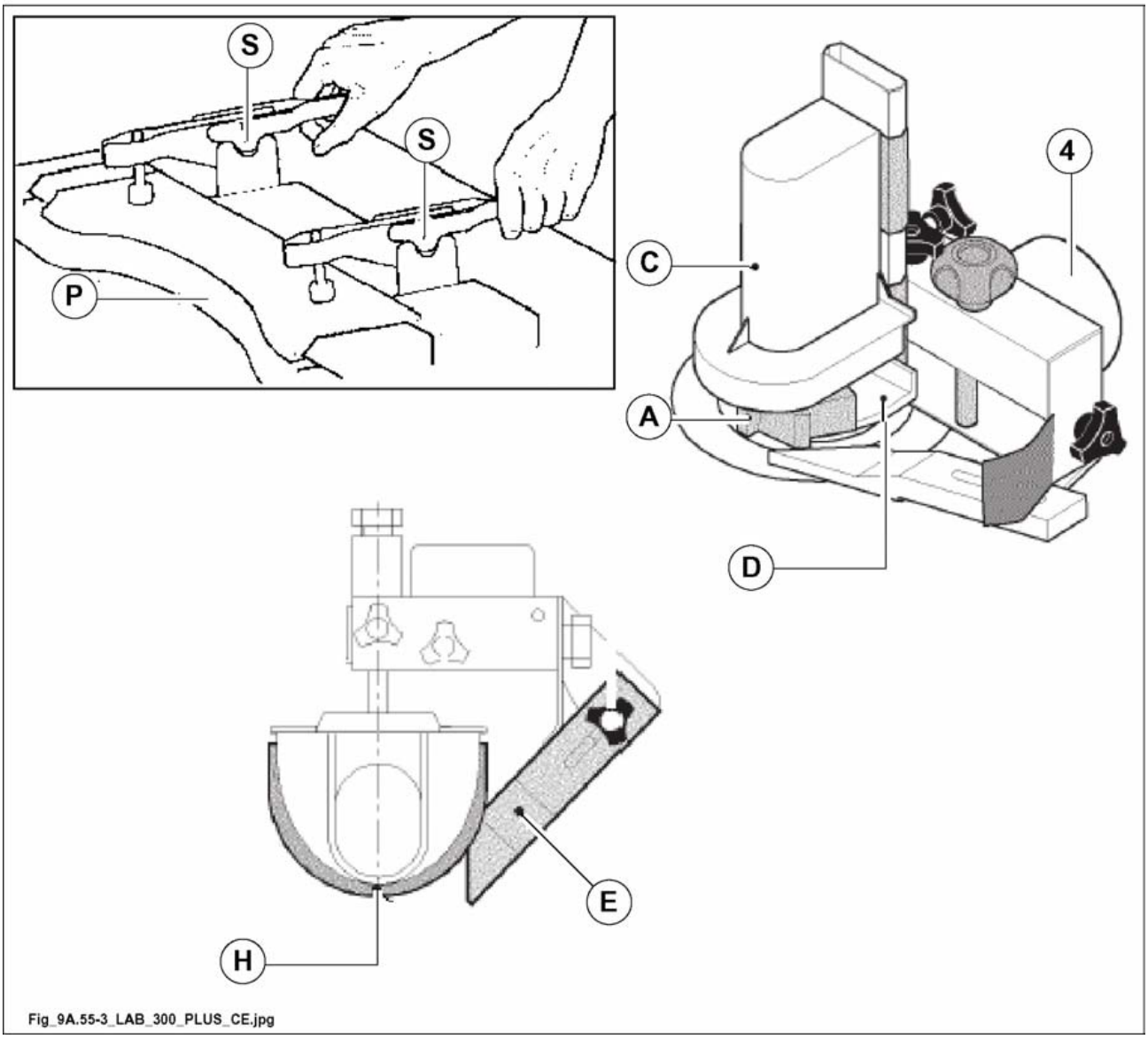

Fig. 9.55-3

9A.55.4 MAINTENANCE

(cu_9a-55-4_0.0)

Replace the worn or damaged parts.

Keep the guard always clean and check its good conditions.

INDEX

10.1 Cutterblock guard 2

10.1.1 Description 2

10.1.2 Guard adjusting 2

10.3 Procedures for safe working 4

10.3.1 Examples 4

10.3.1.1 Surfacing workpieces of thickness less 75 mm 4

10.3.1.2 Straightening 6

10.3.1.3 Surfacing and straightening pieces thicker than 75 mm 8

10.3.1.4 Surfacing pieces of square section 10

10.3.1.5 Surfacing short pieces 11

10.3.1.6 Straightening short pieces 12

10.3.1.7 Chamfering along the fence 13

10.3.1.8 Surfacing workpieces with small section 14

10.3.1.9 Straightening workpieces of small section 15

10.5 Safety notes 16

10.1 CUTTERBLOCK GUARD

(fs_10-1_0.0)

It protects the cutterblock during the surfacing.

The machine is equipped with two protections on the planer:
A - protection behind the planer guide
B - bridge-type protection

10.1.1 DESCRIPTION

(fs_10-1-1_0.0)

NOTE-INFORMATION:
this protection is easily adjustable on the whole length of the cutterblock.

A - Protection behind the planer guide

This is an articulated protection which always covers the planer shaft in both the guide positions, 90º and 45º respectively.

B - Bridge-type protection

1) Bridge (B fig. 10.1).
2) Bridge locking knob (C fig. 10.1).
3) Height adjusting knob (D fig. 10.1) (max. height which may be reached: 75 mm).
4) Arm (E fig. 10.1).
5) Protection locking lever (F fig. 10.1).

10.1.2 GUARD ADJUSTING

(fs_10-1-2_0.0)

B - Bridge-type protection

To adjust the height, operate the knob (D fig.10.1); the right position is maintained by the shock absorber.

 THIS MANUAL IS PROPERTY OF SCM INDUSTRIA S.P.A - ANY TOTAL OR PARTIAL REPRODUCTION IS STRICTLY FORBIDDEN

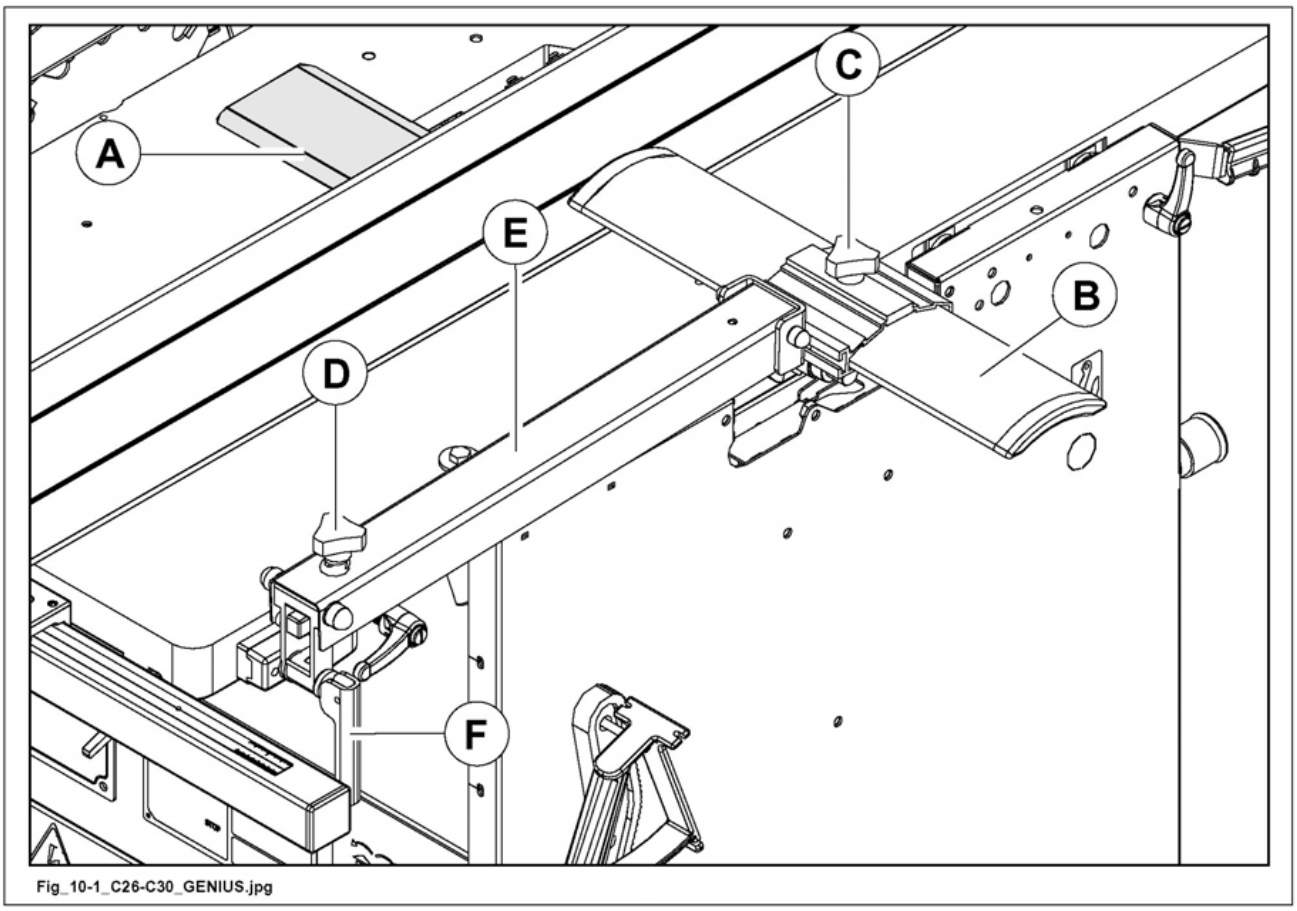

Fig. 10.1

10.3 PROCEDURES FOR SAFE WORKING

(fs_10-3_0.0)

DANGER-WARNING
the guard adjusting shall always be carried out with the motor off.

DANGER-WARNING:
do not machine workpieces too small or too big for the machine.
See relative paragraph 3.1 "Dimensions of workpiece to be milled".

DANGER-WARNING:
adjust the guard so that it covers the planer spindle completely.

DANGER-WARNING:
never put your hands near the cutterblock. Never forget to move the protection to its right position, to protect the tool-holder shaft between two working phases.

10.3.1 EXAMPLES

(fs_10-3-1_0.0)

10.3.1.1 SURFACING WORKPIECES OF THICKNESS LESS 75 MM

(fs_10-3-1-1_0.0)

- Loosen knob (C fig.10.3-1-1) and rest bridge (A fig.10.3-1-1) against fence (G fig. 10.3-1-1); lift bridge (A fig.10.3-1-1) by means of knob (B fig.10.3-1-1) at the height equal to the workpiece thickness.
- Rest the workpiece against the fence and move it forwards with the right hand in order to fit it under the bridge (1 fig.10.3-1-1).
- Push the workpiece forwards(from the inlet table side)(2 fig.10.3-1-1) by keeping the hands flat on the workpiece, let one hand and then the other hand climb over the guard bridge.
- As soon as possible press both hands on the workpiece on the outlet table side to continue the workpiece feed (3 fig.10.3-1-1).

 THIS MANUAL IS PROPERTY OF SCM INDUSTRIA S.P.A - ANY TOTAL OR PARTIAL REPRODUCTION IS STRICTLY FORBIDDEN

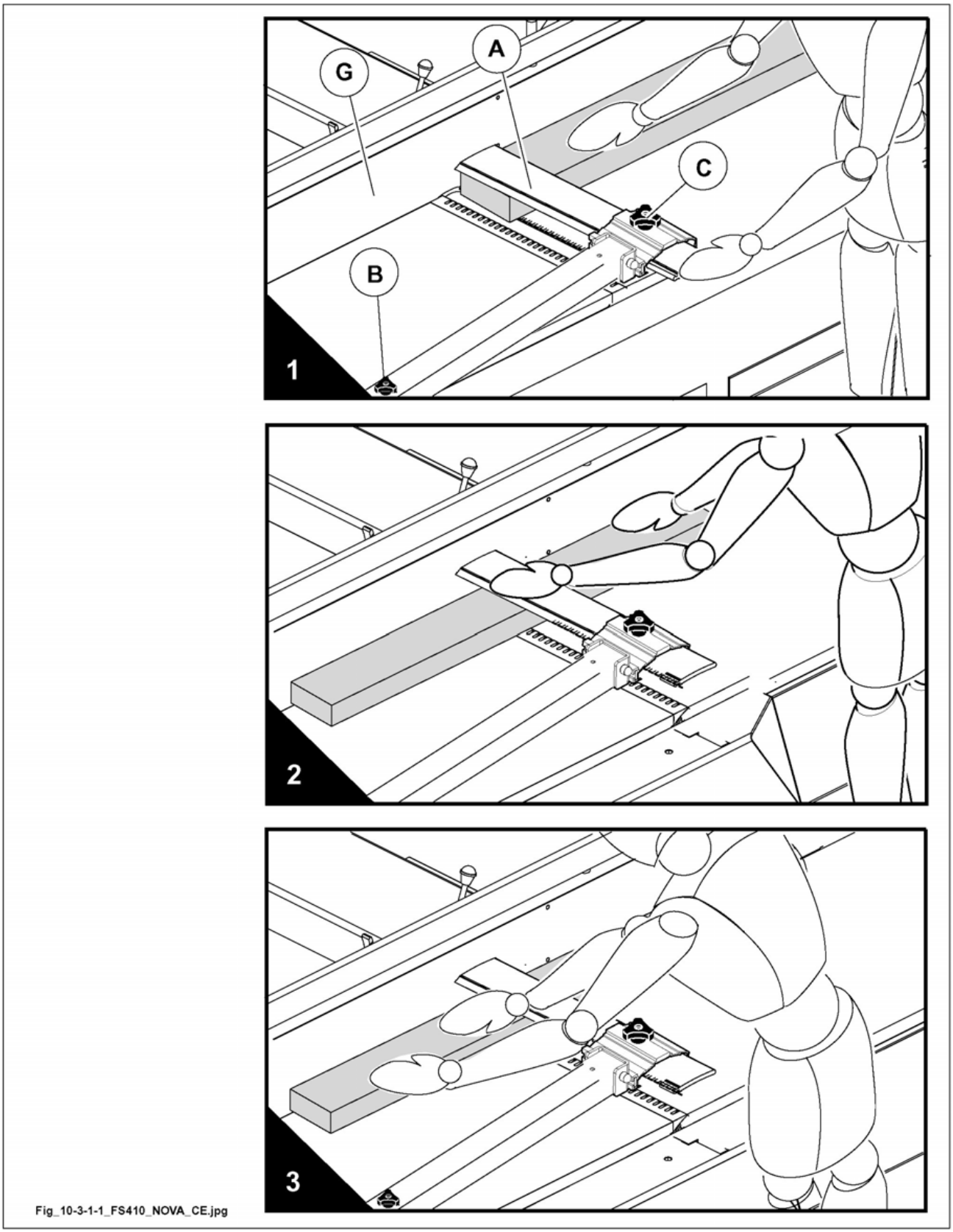

Fig. 10.3-1-1

10.3.1.2 STRAIGHTENING

(fs_10-3-1-2_0.0)

Adjusting the guard for straightening:

the bridge guard must be lowered on the tables and adjusted horizontally relative to the workpiece.

- Rest the bridge onto the table by means of the knob (B fig. 10.3-1-2) and expose the shaft as it is enough to let the piece to be machined pass by pulling the bridge away (A fig. 10.3-1-2), after releasing the knob (C fig. 10.3-1-2) (lock the bridge again, then).

- Press the piece against the fence towards the outlet table by keeping the left hand for example with the clenched fist and the thumb on the piece.
  With the right hand move the piece forwards in order to get a regular motion (for example cleched fist and thumb on the piece) (2 fig. 10.3-1-2).

 THIS MANUAL IS PROPERTY OF SCM INDUSTRIA S.P.A - ANY TOTAL OR PARTIAL REPRODUCTION IS STRICTLY FORBIDDEN

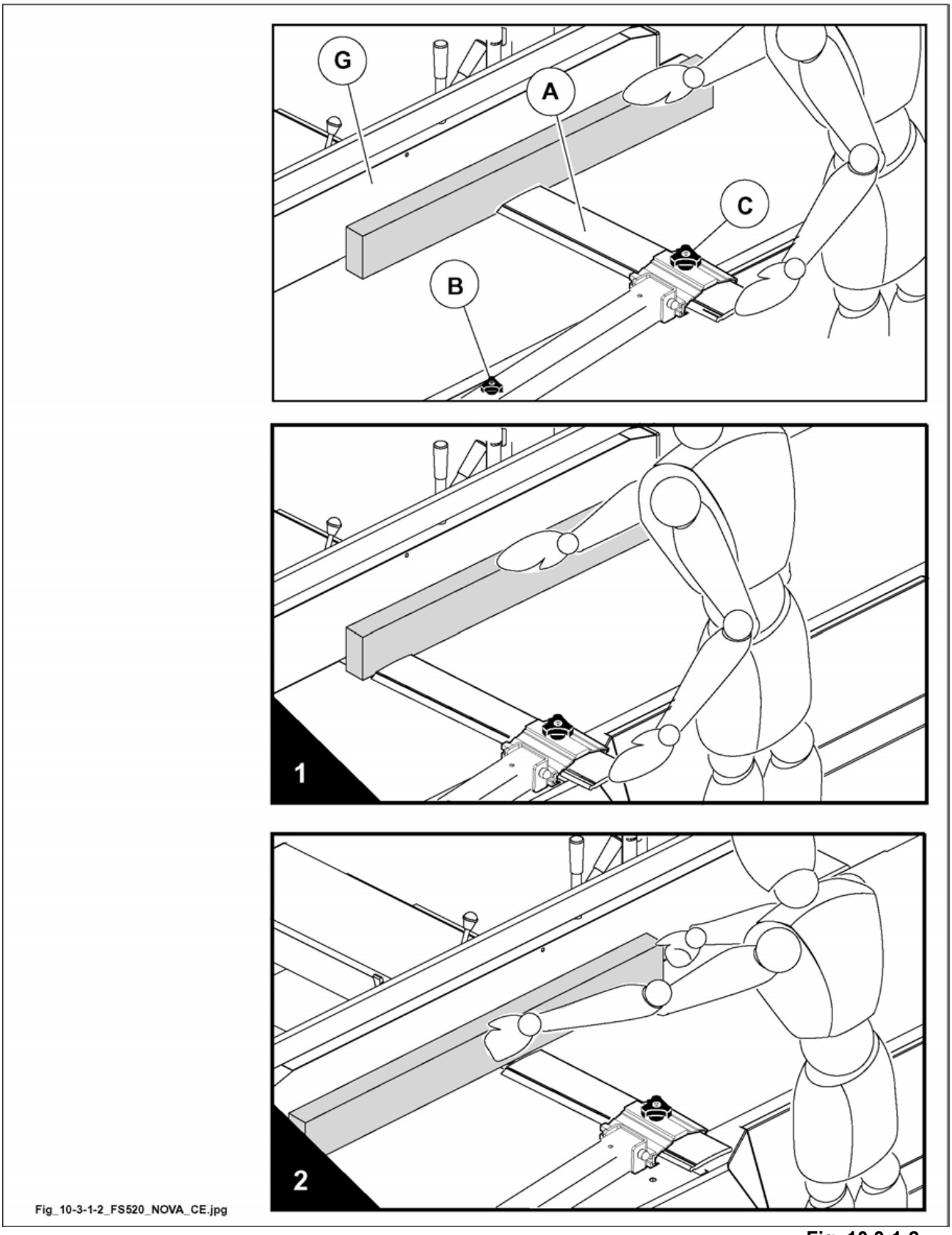

Fig. 10.3-1-2

10.3.1.3 SURFACING AND STRAIGHTENING PIECES THICKER THAN 75 MM

(fs_10-3-1-3_0.0)

The bridge of the guard shall be lower on the tables and horizontally adjusted to the piece.

1 - Rest the bridge onto the table by means of the knob (B fig. 10.3-1-3) and expose the shaft as it is enough to let the piece to be machined pass by pulling the bridge away (A fig. 10.3-1-3), after releasing the knob (C fig. 10.3-1-3) (lock the bridge again, then).
2 - Press the guard so that it rests on the outfeed table (1 fig. 10.3-1-3).

Move the piece along the fence with regular motion by keeping the hands flat on the piece (2 fig. 10.3-1-3).

 THIS MANUAL IS PROPERTY OF SCM INDUSTRIA S.P.A - ANY TOTAL OR PARTIAL REPRODUCTION IS STRICTLY FORBIDDEN

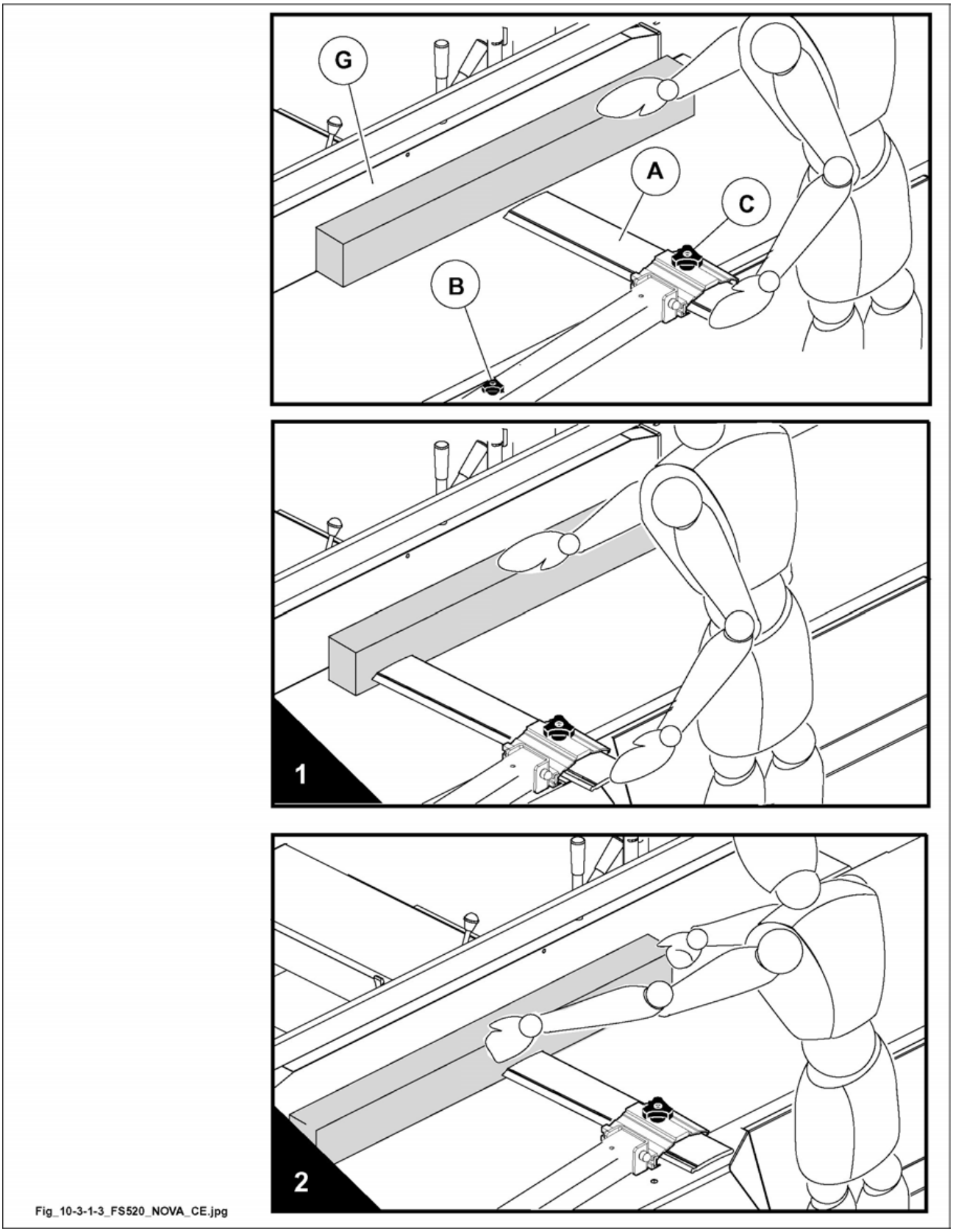

Fig. 10.3-1-3

10.3.1.4 SURFACING PIECES OF SQUARE SECTION

(fs_10-3-1-4_0.0)

NOTE-INFORMATION:
adjust the bridge guard as described in the previous sections.

- the bridge guard must rest on the workpiece (fig. 10.3-1-4) and against the fence.
- Move the piece forwards by keeping the fingers bended.

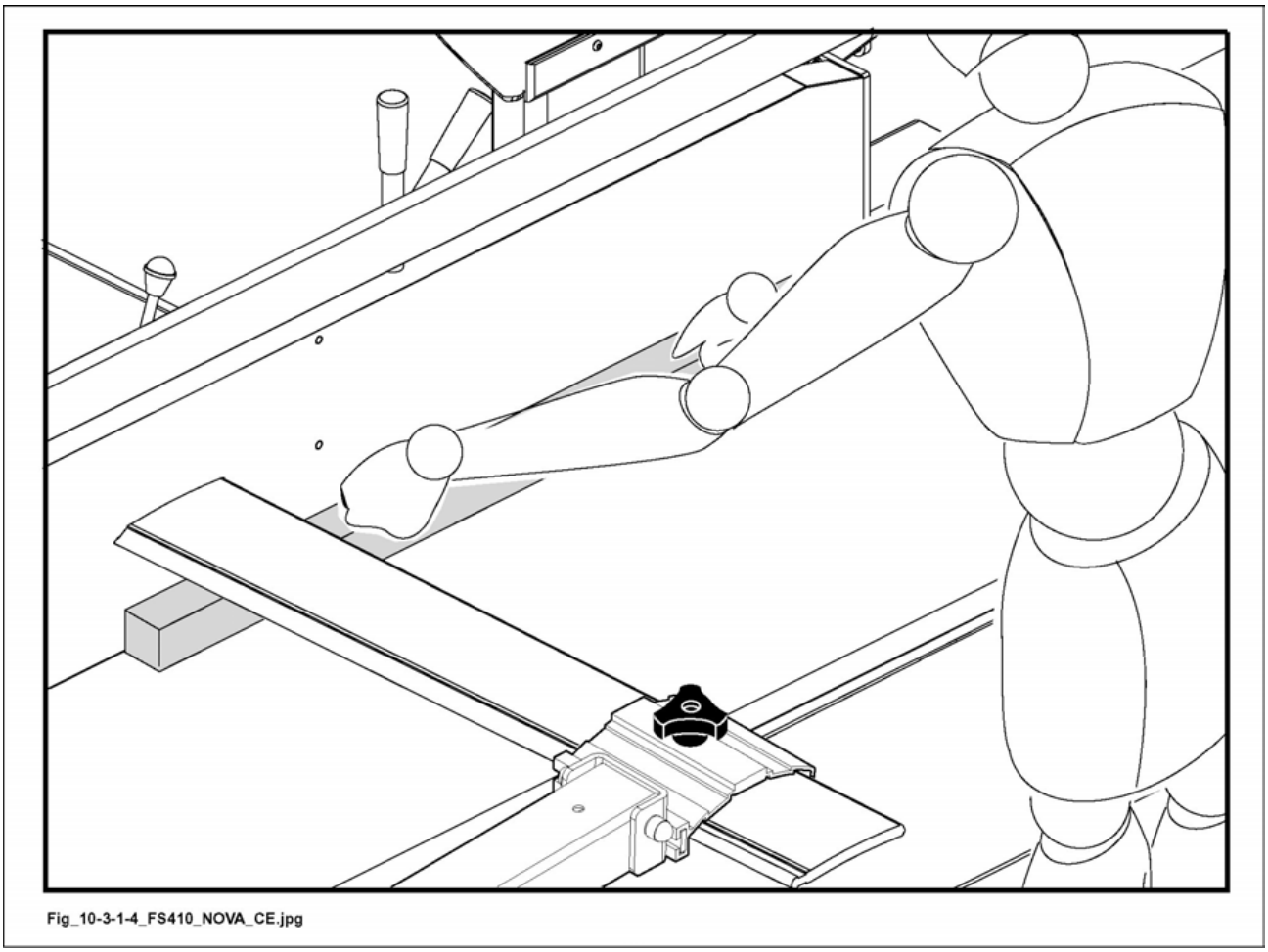

Fig. 10.3-1-4

 THIS MANUAL IS PROPERTY OF SCM INDUSTRIA S.P.A - ANY TOTAL OR PARTIAL REPRODUCTION IS STRICTLY FORBIDDEN

10.3.1.5 SURFACING SHORT PIECES

(fs_10-3-1-5_0.0)

NOTE-INFORMATION:
adjust the bridge guard as described in the previous sections.

- Press the guard bridge on the piece by keeping the hand flat and move the piece forwards with the right hand by using a pusher.
- Rest the left hand on the guard bridge and as soon as the piece rests on the outlet table.
- The pusher shall be thinner than the workpiece.

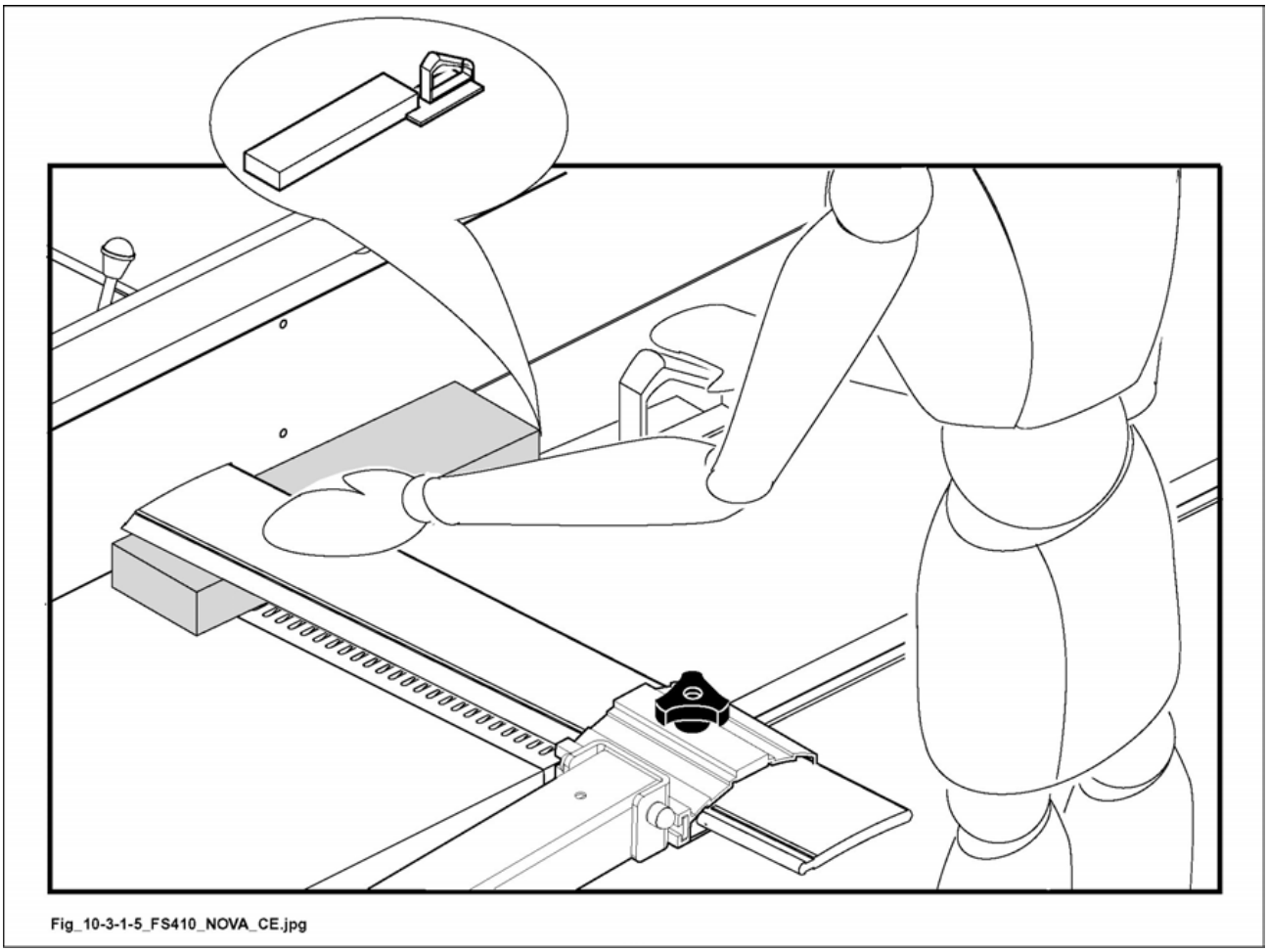

Fig. 10.3-1-5

10.3.1.6 STRAIGHTENING SHORT PIECES

(fs_10-3-1-6_0.0)

NOTE-INFORMATION:
adjust the bridge guard as described in the previous sections.

- Move the piece along the fence and towards the outlet table by keeping the left hand with clenched fist, then with the right hand push the piece by using a pusher.

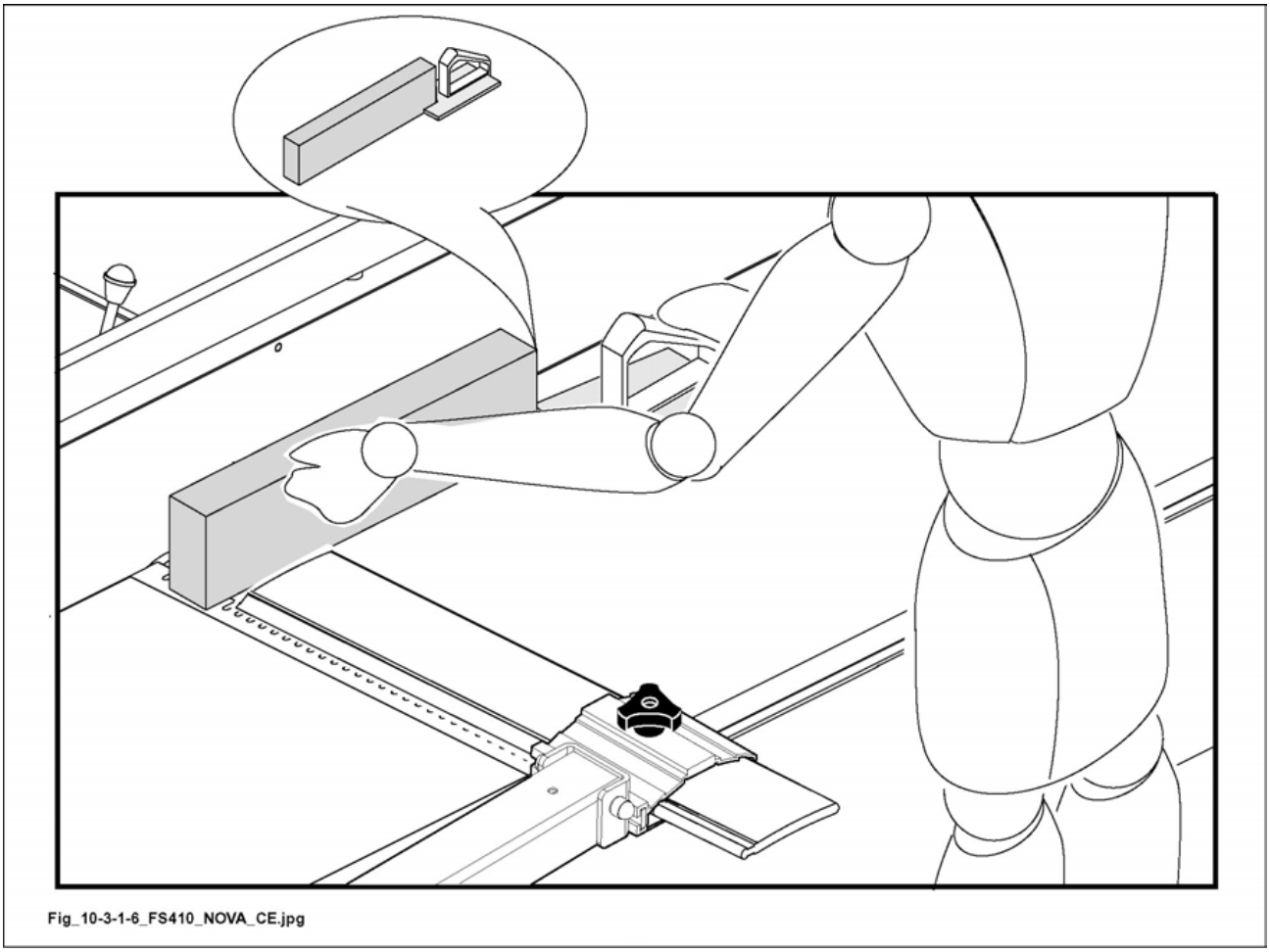

Fig. 10.3-1-6

 THIS MANUAL IS PROPERTY OF SCM INDUSTRIA S.P.A - ANY TOTAL OR PARTIAL REPRODUCTION IS STRICTLY FORBIDDEN

10.3.1.7 CHAMFERING ALONG THE FENCE

(fs_10-3-1-7_0.0)

NOTE-INFORMATION:
adjust the bridge guard as described in the previous sections.

- Rest the piece with the right hand against the slanting fence. Set the piece and the guard: see (1 fig. 10.3-1-7).

- Let the piece feed along the fence towards the outlet table by keeping the hand with clenched fist, push the piece forwards with the clenched right fist (2 fig. 10.3-1-7).

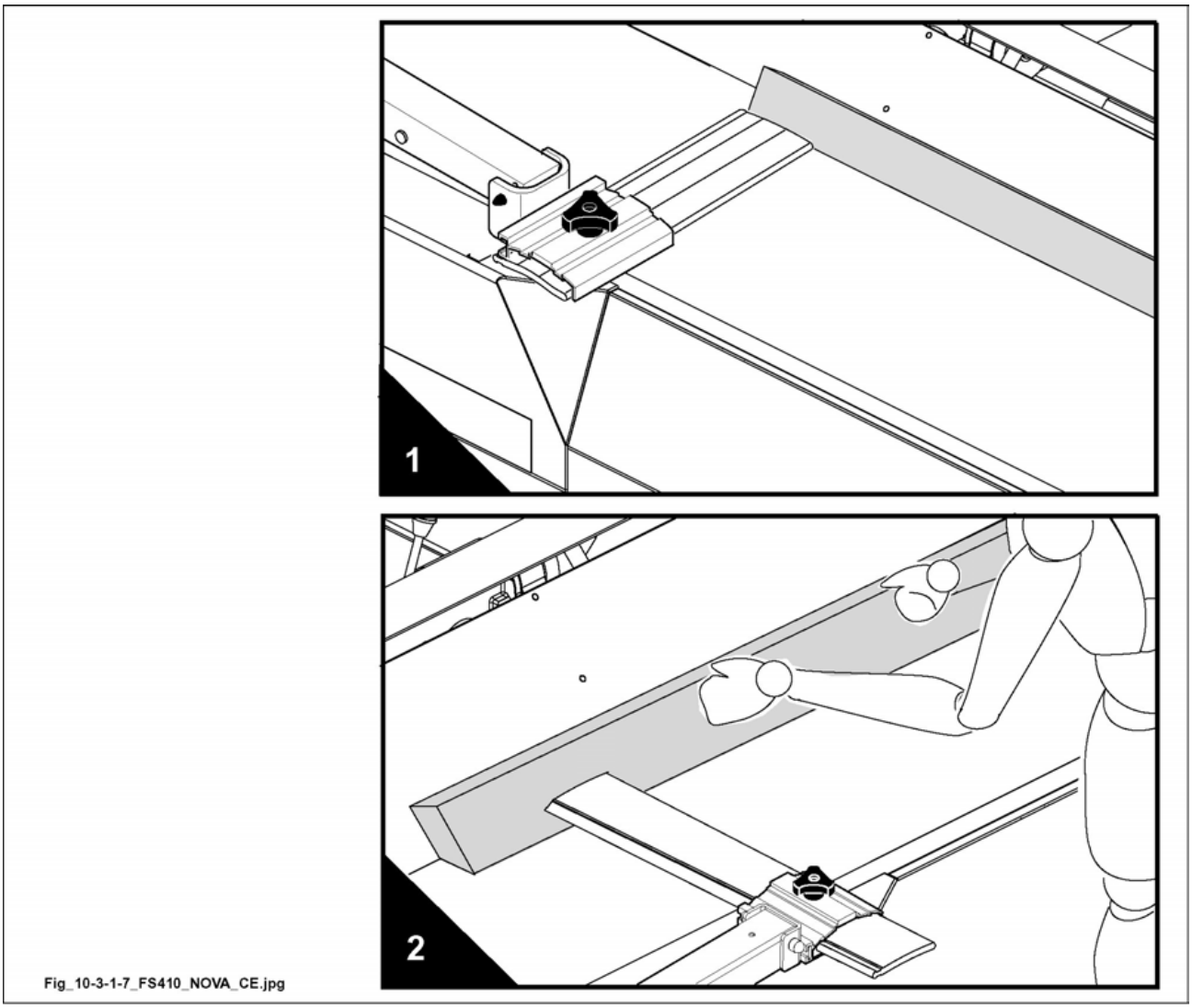

Fig. 10.3-1-7

10.3.1.8 SURFACING WORKPIECES WITH SMALL SECTION

(fs_10-3-1-8_0.0)

NOTE-INFORMATION:
adjust the bridge guard as described in the previous sections.

Push the workpiece forwards with spread hands (fig.10.3-1-8), like in the case of workpieces with thickness lower than 75 mm (see par.10.3.1.1).

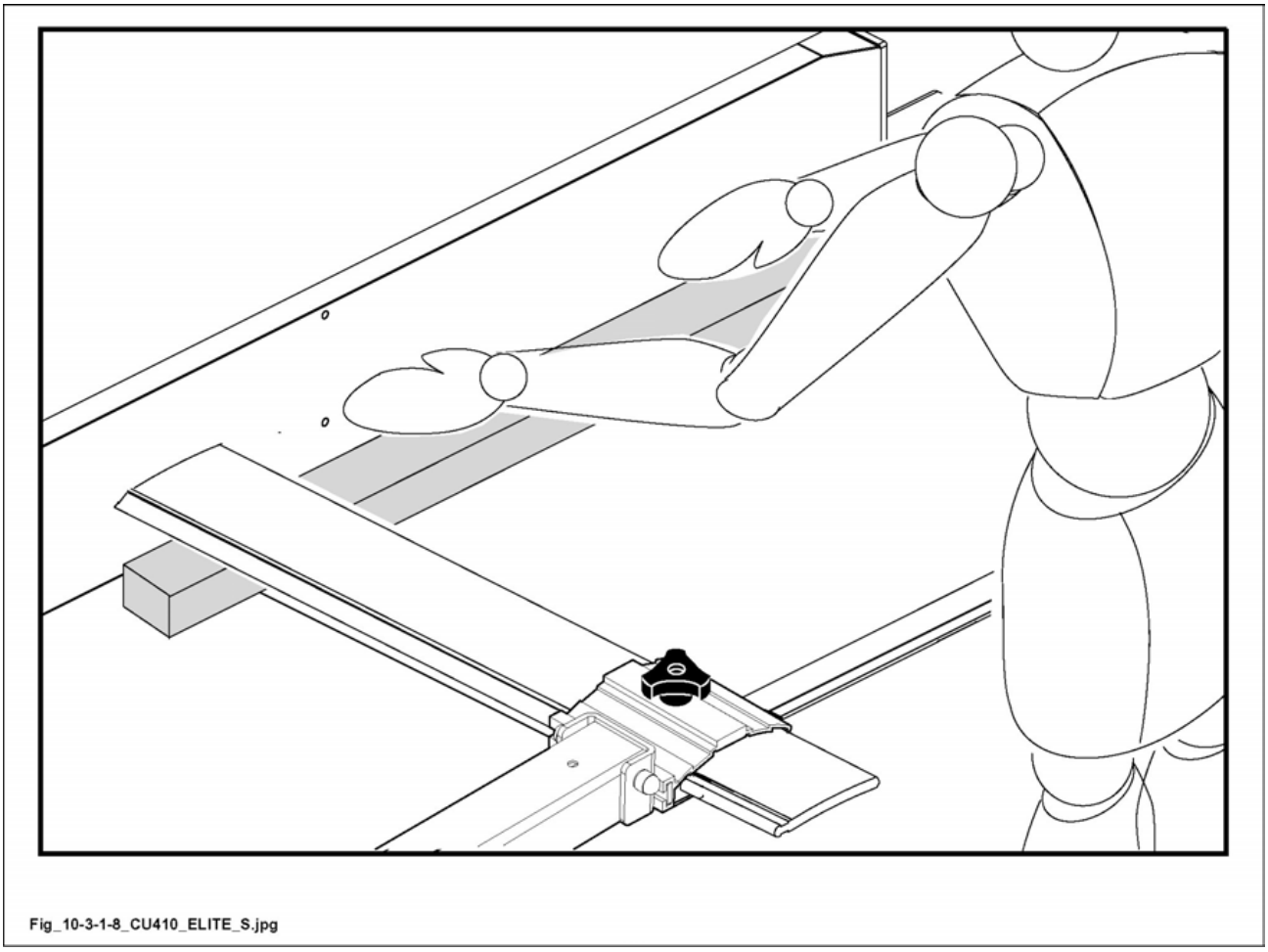

Fig. 10.3-1-8

 THIS MANUAL IS PROPERTY OF SCM INDUSTRIA S.P.A - ANY TOTAL OR PARTIAL REPRODUCTION IS STRICTLY FORBIDDEN

10.3.1.9 STRAIGHTENING WORKPIECES OF SMALL SECTION

(fs_10-3-1-9_0.0)

NOTE-INFORMATION:
adjust the bridge guard as described in the previous sections.

Press the workpiece with the hands (clenched fist) against the rule and the table (fig.10.3-1-9)and push it forwards. The guard is adjusted in horizontal direction against the fence and rests on the workpiece.

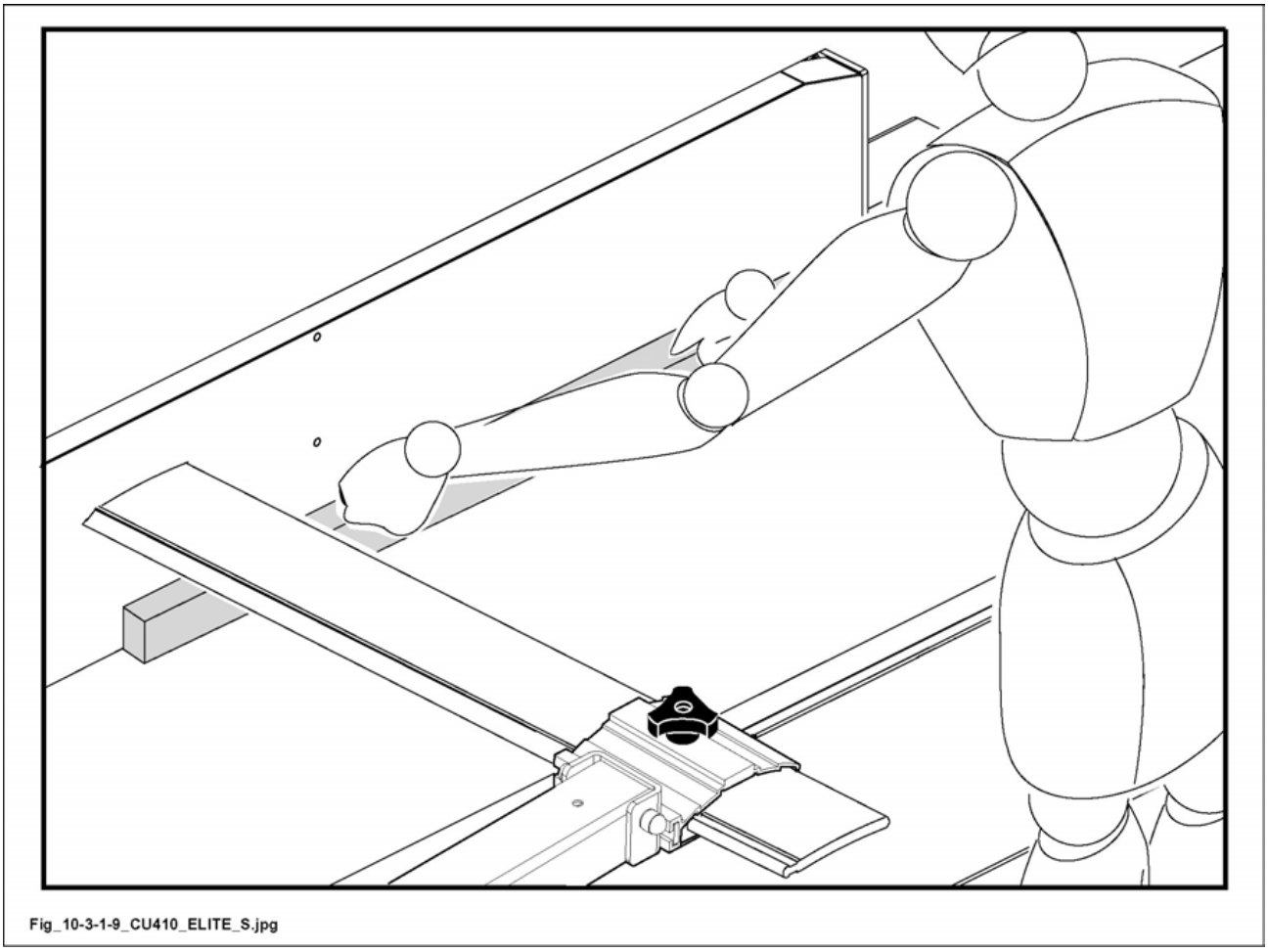

Fig. 10.3-1-9

10.5 SAFETY NOTES

(fs_10-5_0.0)

SAFETY OVER ALL

DANGER-WARNING
keep the machine edges clean and free. Take a safe position to carry out the working.

Remove the chips from the tables by using a wood piece better than your hands.

Set the guard bridge in contact with the tables.

When working the last part, the hand should always be positioned after the plane arbor, on the exit table.

The feed speed of the wood must always be proportionate to the thickness to be removed.

DANGER-WARNING
in case of seepage of chips inside the machine or in the suction hood before intervening switch off the machine and lock the main switch.

DANGER-WARNING
to improve the sliding of the workpieces treat the tables with paraffin or other proper product.

The guard serves as a safety shield, the workpiece is pressed at the outlet table level and not on the guard bridge.

Rest the concave part of the workpiece on the tables and do not machine workpieces with arched shape arcs and other too evident defects (clefts, knots etc.) or foreign bodies (nails, clips etc.).

Make sure that the workpieces are firm and use a support (not supplied by SCM***) positioned behind the the outlet table for long workpieces.***

During the working of workpieces with big thickness (panels) against the fence, lock the guard bridge as near the panel as possible to hinder the panel turnover.

Use the knob. The knob (see Section15) may be applied to pushers of different size, screwing it on with the screws provided.

 THIS MANUAL IS PROPERTY OF SCM INDUSTRIA S.P.A - ANY TOTAL OR PARTIAL REPRODUCTION IS STRICTLY FORBIDDEN

INDEX

15.1 Pusher 2

15.1 PUSHER

(ev_15-1_0.0)

DANGER-WARNING:
when for the execution of a peculiar working, the operator is obliged to put his hands near the tools, for safety reasons a proper pusher shall be used to move the workpiece forwards, to push it against the fence or to remove it after the cutting.

Handle (A fig. 15.1) is supplied for this purpose and can be applied to pushers (D fig. 15.1) of different size by means of screws (B and C fig. 15.1).

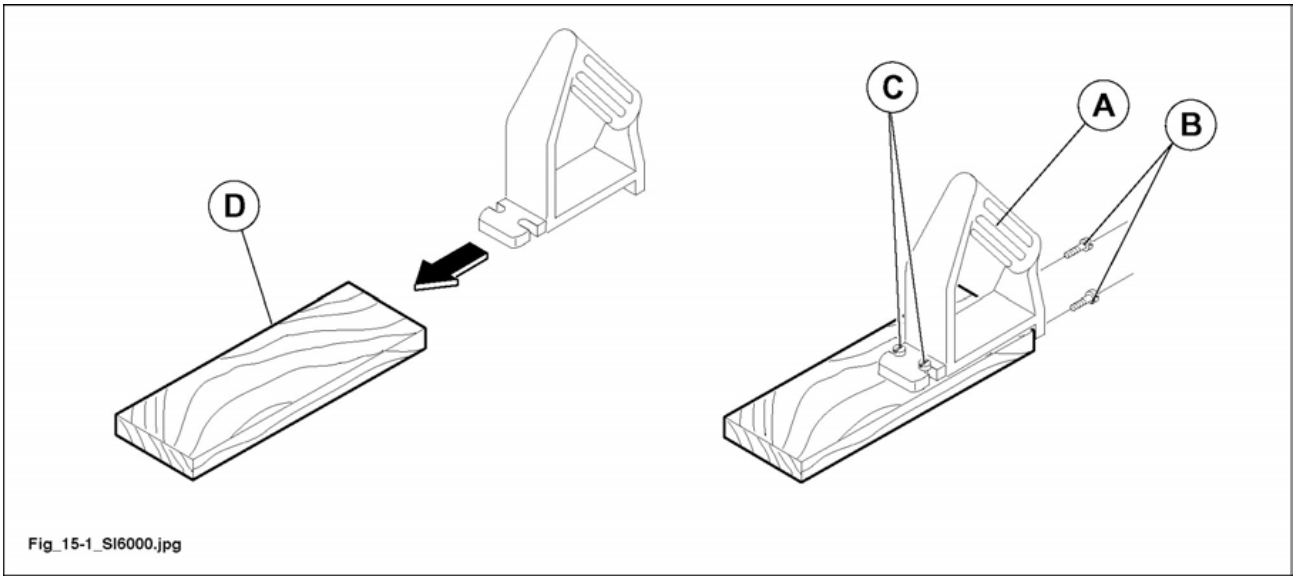

Fig. 15.1

By using a power dust aspirator clean:
- the pusher (H).
- The handle (A).

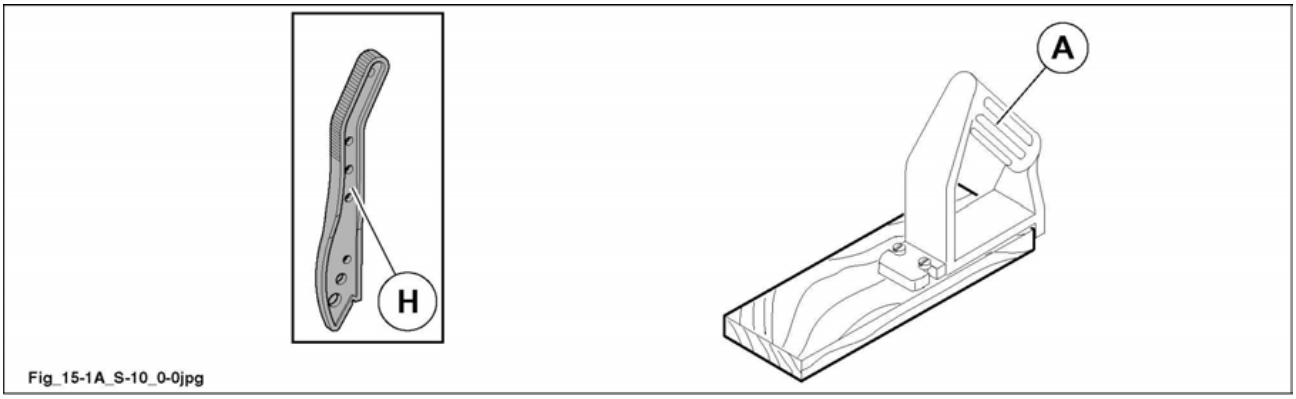

NOTE-INFORMATION:
in case of loss or breakage of the devices contact the manufacturer's SERVICE (Par. 1.3).

 THIS MANUAL IS PROPERTY OF SCM INDUSTRIA S.P.A - ANY TOTAL OR PARTIAL REPRODUCTION IS STRICTLY FORBIDDEN

INDEX


20.1 Machine cleaning 3


20.2 Scheduled maintenance 8


20.3 Lubrication 15


20.7 Check of safety devices 18


20.7.1 Spare parts that affect the operator's health and safety 19


20.18 Replacing the belts 22


20.18.1.A Saw blade spindle 22

20.18.3 Moulder 24


20.18.4 Belts replacing 26


20.23 Belt stretching 28


20.23.1.A Saw blade spindle 28

20.23.3 Moulder 30


20.23.4 Belt tension adjusting 32


20.28 Making the parts which get worn 34


20.28.1 Replacing the chip breaker 34


20.37 Troubles - causes - what to do 35


20.60 Unscheduled maintenance 39

(vuota_20-01)

 THIS MANUAL IS PROPERTY OF SCM INDUSTRIA S.P.A - ANY TOTAL OR PARTIAL REPRODUCTION IS STRICTLY FORBIDDEN

20.1 MACHINE CLEANING

(ev_20-1_0.0)

DANGER-WARNING:
all cleaning operations are to be carried out by the machine operator or by skilled technician.

DANGER-WARNING:
in the switches with electronic brake, even with the motor stopped, the motor is not galvanically disconnected from the mains. The switch supplies the motor with voltage even after it is switched off.

DANGER-WARNING:
before carrying out any of the operations make sure to cut the main electric power and disconnect socket (T fig. 20.1) from plug (S fig. 20.1).

DANGER-WARNING
to handle the knives and the cutterblock you shall wear safety gloves.

FORBIDDEN:
DO NOT USE COMPRESSED AIR; by blowing with a strong air jet (fig. 20.1) chips,dust and dirt of any type may enter into the moving members, so the machine is no more efficient.

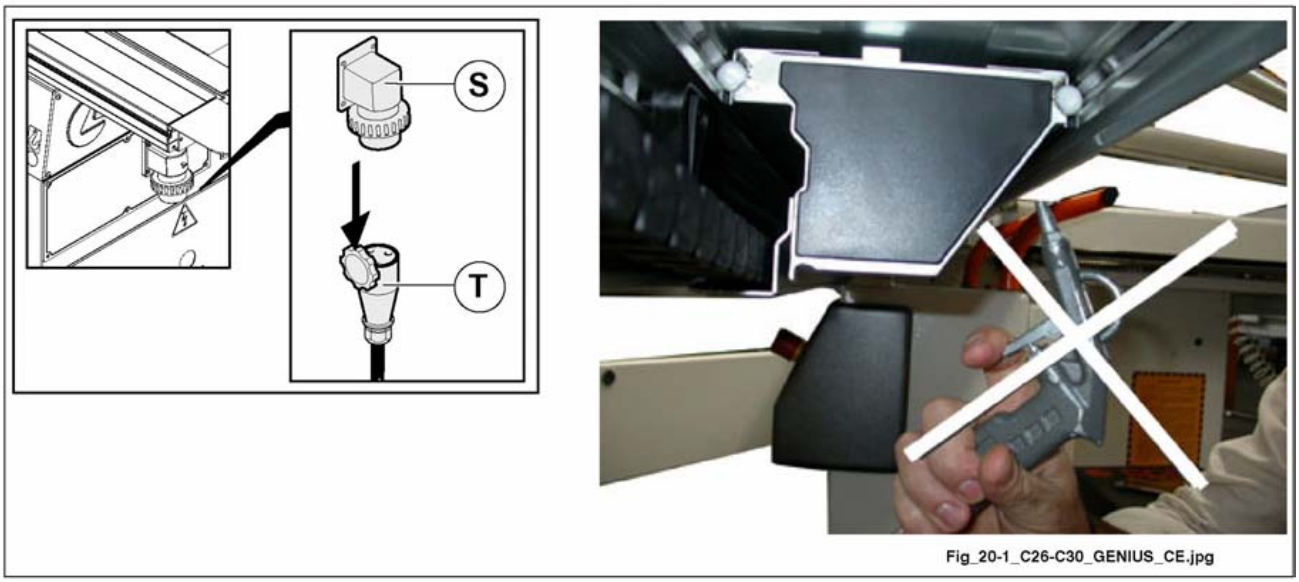

Fig. 20.1

The general cleaning ensures the long life of the machine and is an important safety factor.

NOTE-INFORMATION:
the frequency of cleaning interventions is determined by the room in which the machine is installed and by the machined material.



Fig. 20.1A

Rules for a correct machine cleaning

SAW - MOULDER

By using a power dust aspirator (fig. 20.1A) clean:

- the tables and all cavities where you see chips and dust.
- Suction hoods (T fig. 20.1B) by checking that the are no occlusions.
- With the sliding table in position 1 (totally at entry) fig. 20.1B, then in position 2 (totally at exit), its bottom guides and specially the points indicated by arrows (H fig. 20.1B) for a 15 mm depth.
- Guides (A fig. 20.1B) of squaring frame.
- Rod (L fig. 20.1B) of the fence.
- Slideways (S fig. 20.1B) of the sliding table and (B fig. 20.1B) of the rail.
- Groove (C fig. 20.1B) with a brush or cloth drunken with not dangerous solvent.
- Presser unit sliding rods (G fig. 20.1B).
- Saw unit: slideways (V, F fig. 20.1B).
- Shaper unit: slideways (P, Q fig. 20.1B).

Then by using a cloth or a brush drunken with a proper and not dangerous product,
clean all moving parts specially the ones exposed to the resin and dust.

DANGER-WARNING:
do not oil, do not grease:
- the guides of sliding table (S fig. 20.1B) and of rail (B fig. 20.1B) .

 THIS MANUAL IS PROPERTY OF SCM INDUSTRIA S.P.A - ANY TOTAL OR PARTIAL REPRODUCTION IS STRICTLY FORBIDDEN

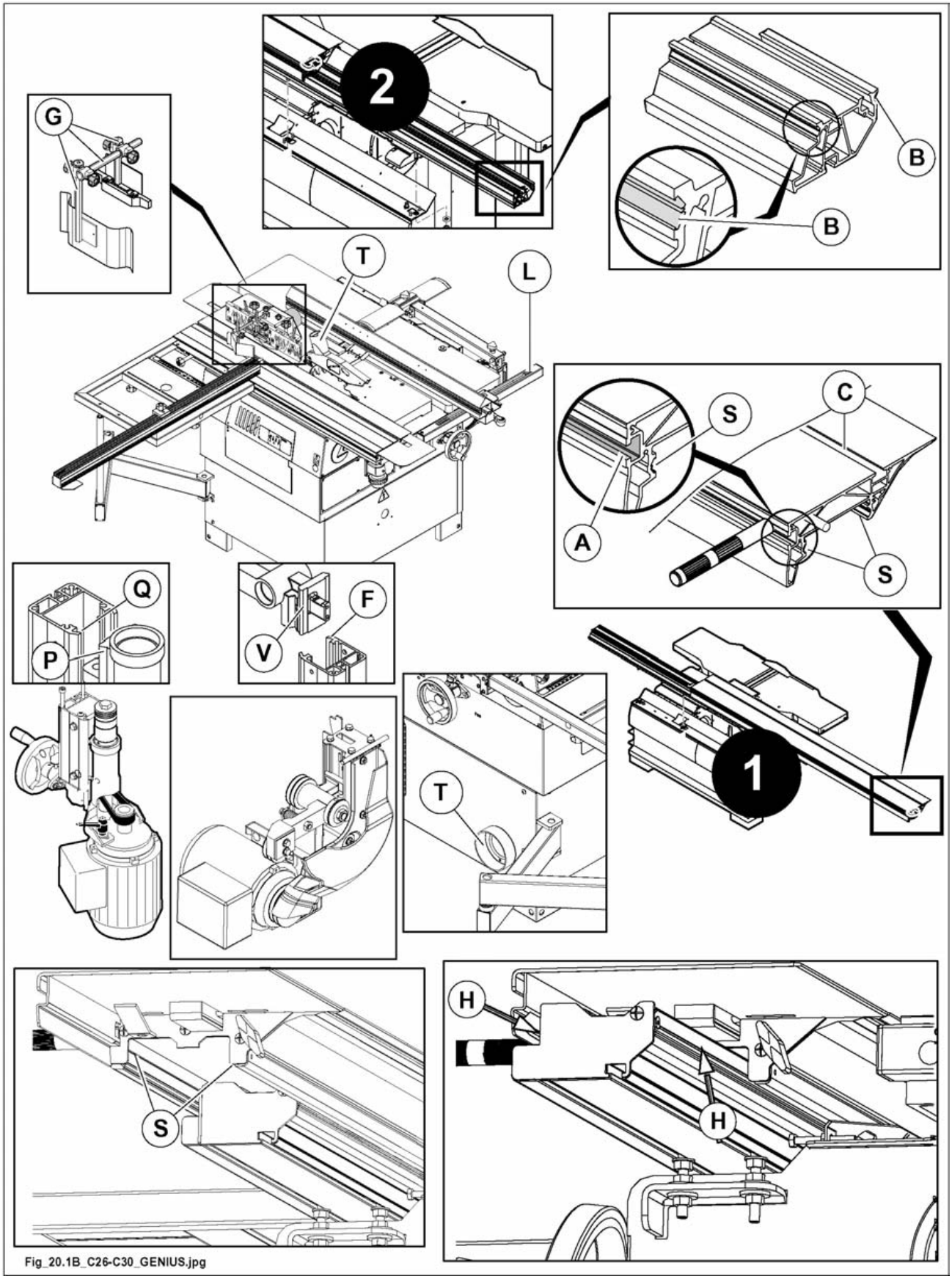

Fig. 20.1B

Rules for a correct machine cleaning

SURFACE PLANING AND THICKNESSING MACHINE

Every evening by using a proper aspirator clean:
- the table, cutterblock, anti kickback fingers and the cavities where you see dust and chips seepage;
- periodically clean the rollers by using not dangerous products; never use acid products;
- suction hoods (C fig.20.1) by checking that there are no occlusions.

Never use acid products.

After sucking chips or dust, with a cloth drunken with a not dangerous solvent clean:
- all moving parts, particularly the ones exposed to the resin and to the dust;
- knives (B fig. 20.1C) of the cutterblock;
- sliding rod (D fig. 20.1C) of planer guide (OPT);
- guides (E fig. 20.1C) for mortiser sliding (OPT);
- sliding rods (P fig. 20.1C) of mortising table (OPT);
- screw (V fig. 20.1C) for (OPT) mortiser height adjusting;
- thicknessing table - Screw (S fig. 20.2) for height adjusting;
- thicknessing table - Sliding cylinder (Z fig. 20.1C).



FORBIDDEN:
NEVER OIL OR GREASE THE ANTI-KICK BACK FINGERS.

 THIS MANUAL IS PROPERTY OF SCM INDUSTRIA S.P.A - ANY TOTAL OR PARTIAL REPRODUCTION IS STRICTLY FORBIDDEN

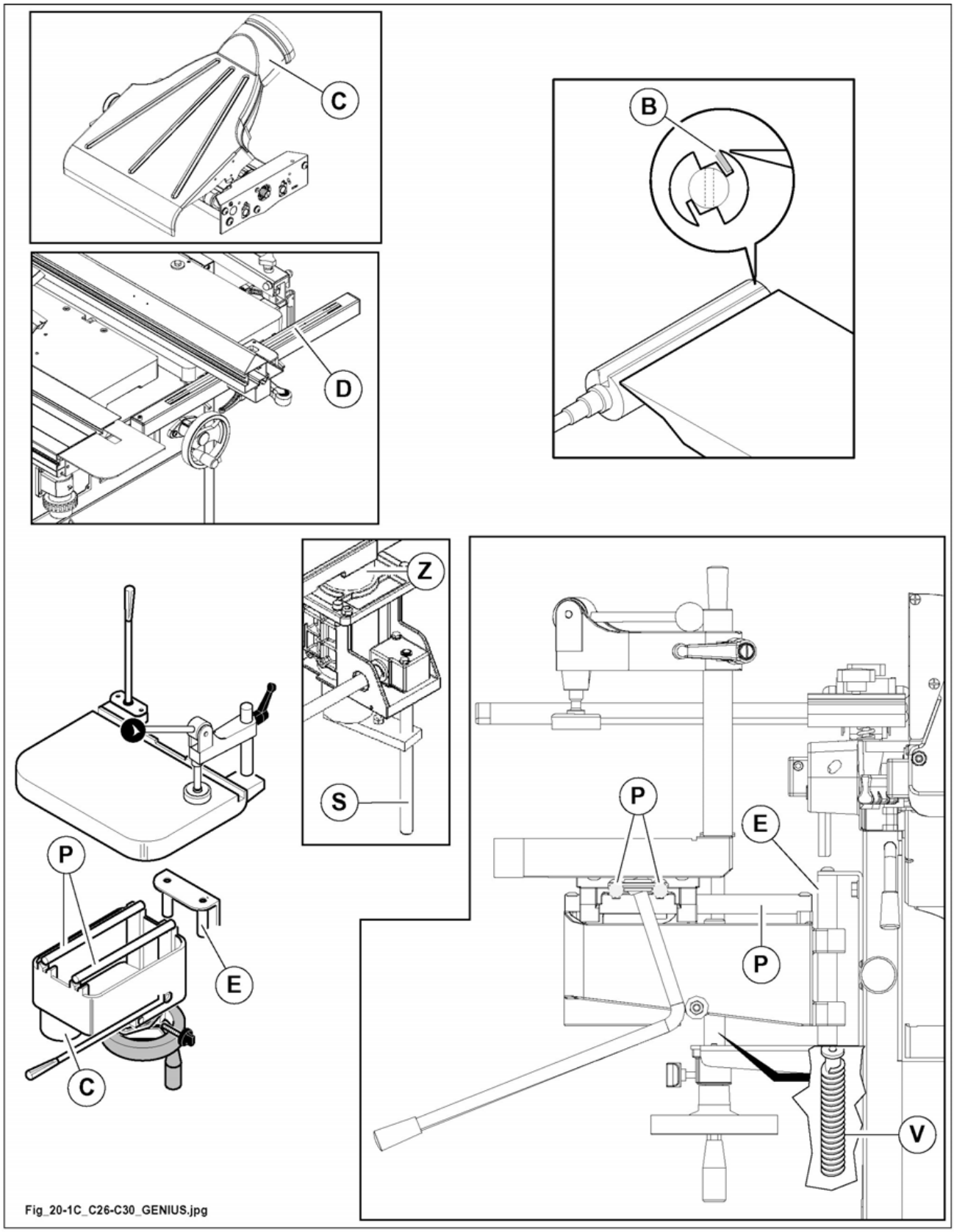

Fig. 20.1C

20.2 SCHEDULED MAINTENANCE

(ev_20-2_0.0)

Scheduled maintenance is of the utmost importance to obtain the best performance as well as a safe operation of the machine.

DESCRIPTION	INSPECTION / FREQUENCY	ACTION
Safety circuit	20 years	Contact the manufacturer

SAW - MOULDER

DESCRIPTION	INSPECTION	FREQUENCY	ACTION
General machine cleaning	Visual inspection	Daily	- By using an aspirator remove dust or chips (Par. 20.1).
Slide guides (S fig. 20.1B) of the wagon	Visual inspection	Weekly	- By using an aspirator remove dust or chips (Par. 20.1). - Clean with a cloth or a brush wetted with a suitable, non-dangerous product. - **Do not oil or grease.**
Guides (A fig. 20.1B) of the squaring frame	Visual inspection	Daily	- By using an aspirator remove dust or chips (Par. 20.1). - Clean with a cloth or a brush wetted with a suitable, non-dangerous product.
Slide guides (B fig. 20.1B) of the rail	Visual inspection	Weekly	- By using an aspirator remove dust or chips (Par. 20.1). - Clean with a cloth or a brush wetted with a suitable, non-dangerous product. - **Do not oil or grease.**
Extraction hood cleaning (T fig. 20.1B)	Visual inspection	Weekly	- Disconnect the flexible tubes from suction hoods, check that there are no occlusions and clean by sucking.
Width guide bar (L fig. 20.1B)	Visual inspection	Daily	- By using an aspirator remove dust or chips (Par. 20.1).. 20.1). - Clean with a cloth or a brush wetted with a suitable, non-dangerous product.
Saw: slide guides (V, F fig. 20.1B)	Visual inspection	Weekly	- By using an aspirator remove dust or chips (Par. 20.1). - Clean with a cloth or a brush wetted with a suitable, non-dangerous product. - **Do not oil or grease.**
Spindle moulder: slide guides (P, Q fig. 20.1B).	Visual inspection	Daily	- By using an aspirator remove dust or chips (Par. 20.1). - Clean with a cloth or a brush wetted with a suitable, non-dangerous product. - **Do not oil or grease.**

 THIS MANUAL IS PROPERTY OF SCM INDUSTRIA S.P.A - ANY TOTAL OR PARTIAL REPRODUCTION IS STRICTLY FORBIDDEN

DESCRIPTION	INSPECTION	FREQUENCY	ACTION
Slide rods (G fig. 20.1B) of hold-down unit	Visual inspection	Daily	- By using an aspirator remove dust or chips (Par. 20.1). - Clean with a cloth or a brush wetted with a suitable, non-dangerous product.
Transmission belts	Check tensioning and wear	Weekly	- Adjust tension correctly and replace if necessary (Par. 20.23 – 20.18).
Safety and emergency devices (Chapter 2)	Visual check and check functioning	Every 2 weeks	- Perform stop tests (Par. 20.4).

SURFACE PLANING AND THICKNESSING MACHINE

DESCRIPTION	INSPECTION	INTERVALS	OPERATIONS
General machine cleaning	Visual inspection	Daily	- By using an aspirator remove dust or chips (Par. 20.1).
Tools (B fig. 20.2) of the planer unit	Visual inspection	Daily	- By using an aspirator remove dust or chips (Par. 20.1). - Clean with a cloth or brush soaked in a suitable product which is not dangerous.
Sliding rod (D fig. 20.2) of planer guide	Visual inspection	Weekly	- By using an aspirator remove dust or chips (Par. 20.1). - Clean with a cloth or brush soaked in a suitable product which is not dangerous. - Lubricate with oil (Par. 20.3).
Cleaning of suction hoods (C fig. 20.2)	Visual inspection	Weekly	- Disconnect the flexible tubes from suction hoods, check that there are no occlusions and clean by sucking.
Guides (E fig. 20.2) for sliding mortiser (OPT)	Visual inspection	Weekly	- By using an aspirator remove dust or chips (Par. 20.1). - Clean with a cloth or brush soaked in a suitable product which is not dangerous. - Lubricate with oil (Par. 20.3).

DESCRIPTION	INSPECTION	INTERVALS	OPERATIONS
Sliding rods (P fig. 20.2) of mortiser table (OPT)	Visual inspection	Weekly	- By using an aspirator remove dust or chips (Par. 20.1). - Clean with a cloth or brush soaked in a suitable product which is not dangerous. - Lubricate with oil (Par. 20.3).
Screw (V fig. 20.2) for motiser height adjusting (OPT)	Visual inspection	Weekly	- By using an aspirator remove dust or chips (Par. 20.1). - Clean with a cloth or brush soaked in a suitable product which is not dangerous. - Lubricate with grease (Par. 20.3).
Thicknessing table (H fig. 20.2)	Visual inspection	Daily	- Clean with a vacuum cleaner.
Cleaning the moving parts, particularly the ones exposed to the resin and to the dust	Visual inspection	Weekly	- Clean with proper detergents.
Table lifting chain	Visual inspection	Weekly	- Clean and lubricate (Par. 20.3).
Thicknessing table - Screw (S fig. 20.2) for height adjusting	Visual inspection	Weekly	- By using an aspirator remove dust or chips (Par. 20.1). - Clean with a cloth or brush soaked in a suitable product which is not dangerous. - Lubricate with grease (Par. 20.3).
Thicknessing table - Sliding cylinder (Z fig. 20.2)	Visual inspection	Daily	- By using an aspirator remove dust or chips (Par. 20.1).
Feed rollers	Visual inspection	Daily	- Clean with proper detergents.
⚠ Anti kickback fingers (L fig. 20.2)	Visual inspection	Daily	- By using an aspirator remove dust or chips (Par. 20.1). Clean with proper detergents. - **Do not oil, do not grease.**

 THIS MANUAL IS PROPERTY OF SCM INDUSTRIA S.P.A - ANY TOTAL OR PARTIAL REPRODUCTION IS STRICTLY FORBIDDEN

DESCRIPTION	INSPECTION	INTERVALS	OPERATIONS
	Visual inspection	After 1 working hour	- **Check that the anti-kick back fingers are efficient.**
Operator units' belts (O fig. 20.2)	Check tensioning and wear	Daily	- Tension correctly (Par. 20.28) or replace (Par. 20.18) if necessary.
Safety and emergency devices (Chapter 2)	Visual check and check functioning	Every 2 weeks	- Perform stop tests (Par. 20.4).

Helicoidal planer with tips (OPT)

DESCRIPTION	INSPECTION	INTERVALS	OPERATIONS
Tools (U fig. 20.2) of the planer unit	Visual inspection	Daily	- By using an aspirator remove dust or chips (Par. 20.1). - Clean with a cloth or brush soaked in a suitable product which is not dangerous. - Rotate or replace tip-tools, if need be (see Par. 7A.5).

 THIS MANUAL IS PROPERTY OF SCM INDUSTRIA S.P.A - ANY TOTAL OR PARTIAL REPRODUCTION IS STRICTLY FORBIDDEN

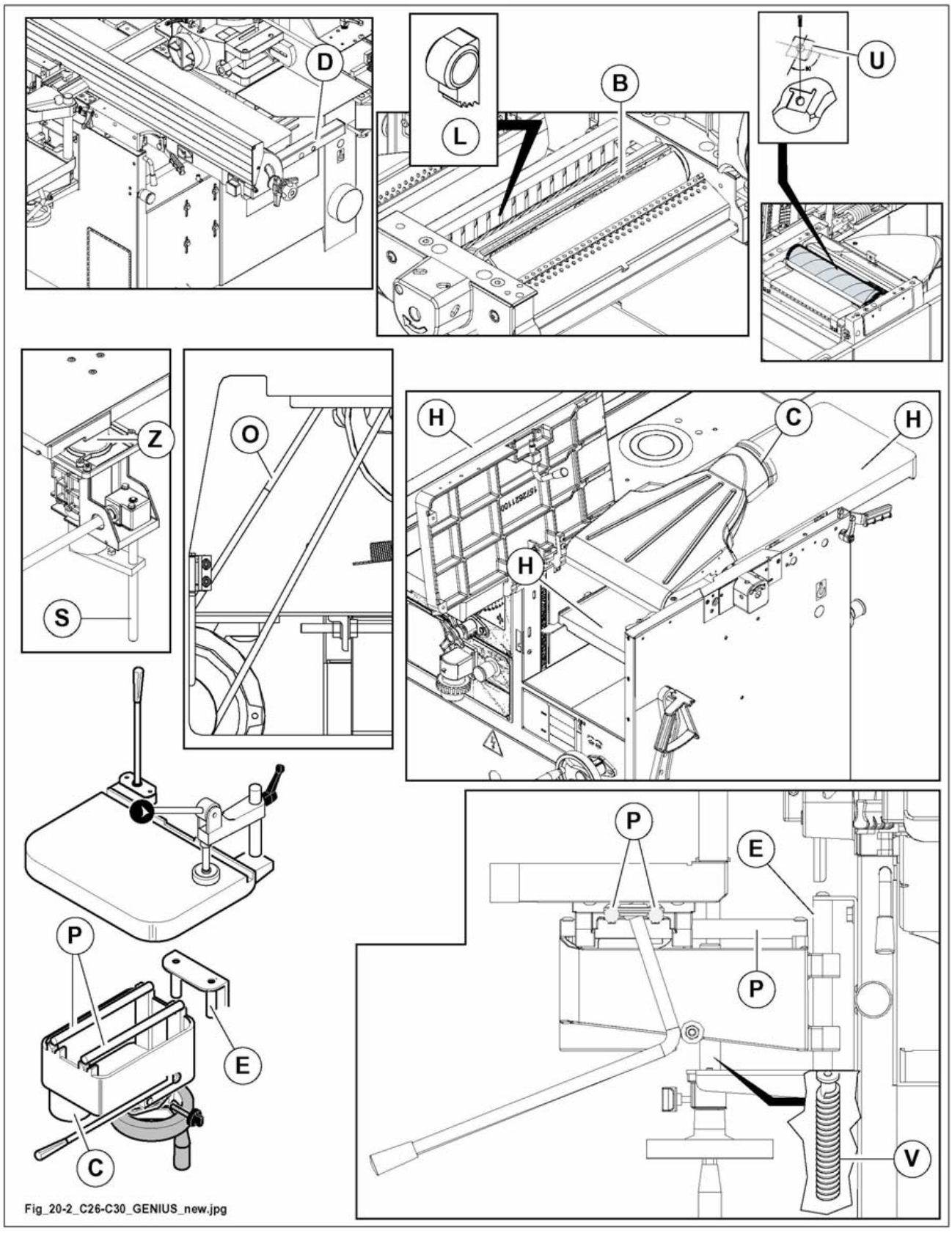

Fig. 20.2

(st-11)

 THIS MANUAL IS PROPERTY OF SCM INDUSTRIA S.P.A - ANY TOTAL OR PARTIAL REPRODUCTION IS STRICTLY FORBIDDEN

20.3 LUBRICATION

(ev_20-3_0.0)

The accurate lubrication ensures the long life as well as the best performance of the machine.

SAW - MOULDER

DANGER-WARNING:
do not oil, do not grease:
- the guides of sliding table (S fig. 20.1B) and of rail (B fig. 20.1B) .

NOTE-INFORMATION:
- as all bearings are sealed and lubrificated-for life, they do not require any maintenance;
- when you have to replace these bearings directly apply to SCM ***spare parts department;***
- bearings of other makes, with corresponding names, are NOT suitable.

NOTE-INFORMATION:
protect all belts and pulleys to avoid contamination with oil.

SURFACE PLANING AND THICKNESSING MACHINE

Weekly lubricate with grease:

Manufacturer	Lubricant name
AGIP	GR MU EP1
ARAL	ARALUB HL1
BP	GREASE LTX1
SHELL	SUPER GREASE EP1
MOBIL	MOBILPLEX 46
KLÜBER	CENTOPLEX 1
ESSO	BEACON EP0

1) worm (V fig. 20.3A) for lifting the mortiser (OPT).
2) Thicknessing table - Screw (S fig. 20.3A) for height adjusting.
3) Transmission chain (A fig. 20.3A) of the motion to the feed rollers.

Lubricate with oil here indicated:

Manufacturer	Lubricant name
AGIP	EXIDIA 220
ARAL	DEGANIT B 220
BP	ENERGOL GHL 220
SHELL	TONNA OIL T220
MOBIL	VACTRA OIL N° 4
KLÜBER	LAMORA SUPER POLADD 220
ESSO	FEBIS K 220

1) sliding rod (D fig. 20.3A) on planer guide.
2) Sliding rods (P fig. 20.3A) of mortiser table (OPT).
3) Guides (E fig. 20.3A) for sliding mortiser (OPT).

NOTE-INFORMATION:
- as all bearings are sealed and lubrificated-for life, they do not require any maintenance;
- when you have to replace these bearings directly apply to SCM ***Ufficio Ricambi;***
- bearings of other makes with corresponding names are NOT suitable.

NOTE-INFORMATION:
protect all belts and pulleys to avoid contamination with oil.

 THIS MANUAL IS PROPERTY OF SCM INDUSTRIA S.P.A - ANY TOTAL OR PARTIAL REPRODUCTION IS STRICTLY FORBIDDEN

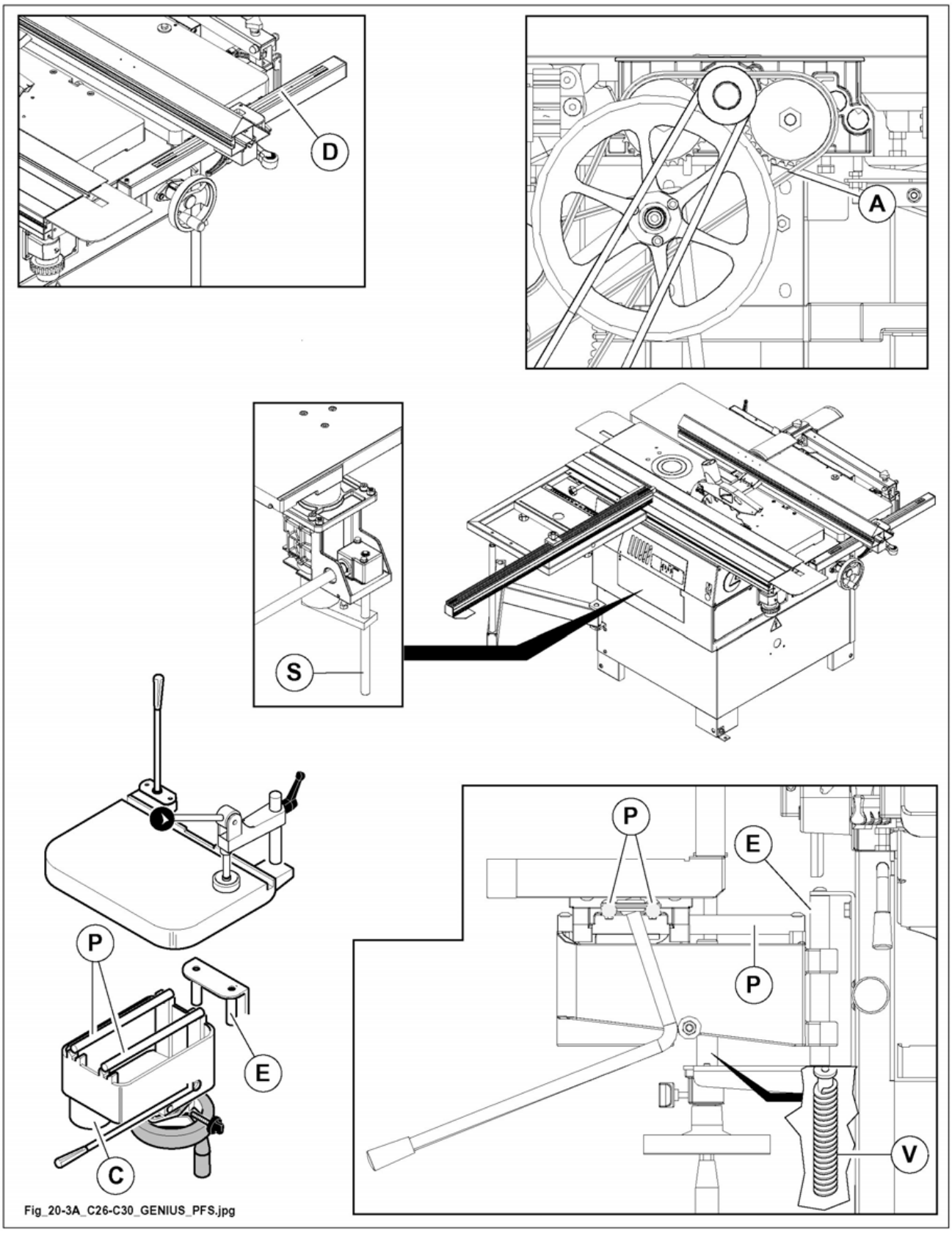

Fig. 20.3A

20.7 CHECK OF SAFETY DEVICES

(ev_20-7_0.0)

The machine is equipped with safety devices described in Chapter 2 which ensure tha safe machine operation.
Every 2 weeks check the controls for emergency stops with a test.
With the machine under normal operating conditions press the emergency buttons arranged on the machine one at a time; the motor shall stop.
Every 2 weeks check that the microswitches are efficient.
With the machine under normal operating conditions, by opening the door of the motor housing the spindle motor shall stop.

Every 2 weeks check that the microswitches are efficient.
Plane microswitch: stops machine when planing tables tip.
Enable the planer operating unit for processing to the thickness if the chip conveyor protection is turned upside down.

NOTE-INFORMATION:
- the belt slackening may cause an increase of the braking time, therefore make sure that the belts are stretched and in good conditions (see par. 20.23) (max. time to stop the motor: 10 sec).

At the beginning of each working shift make sure that the guards on all sides of the machine are efficient and ensure a valid protection.
Periodically check that the guards are efficient and that the plates in particular the ones with yellow ground are in good state.

DANGER-WARNING:

the responsible technician is to be informed about eventual troubles during the test; in that case he shall shut off the machine and apply to Technical Service of SCM ***dealer.***
Every 20 years the safety circuit must be overhauled. Contact the manufacturer.

 THIS MANUAL IS PROPERTY OF SCM INDUSTRIA S.P.A - ANY TOTAL OR PARTIAL REPRODUCTION IS STRICTLY FORBIDDEN

20.7.1 SPARE PARTS THAT AFFECT THE OPERATOR'S HEALTH AND SAFETY

(mmax_20-7-1_0.0)

The previous section "Checking safety devices" indicates the operations which the user must perform and the respective frequency.
Such operations allow early identification of any malfunctions in machine safety systems.

NOTE-INFORMATION:
if a malfunction is detected, the user must contact the Assistance Centre authorised by SCM***.***

FORBIDDEN:
never attempt any work on the devices unless otherwise indicated in this manual.

The SCM assistance centre will identify which safety system component needs substituting and will substitute it (or will provide instructions on how to proceed).

NOTE-INFORMATION:
the user (or a specialised user technician) is only authorised to carry out the work described in this Instruction manual.

NOTE-INFORMATION:
when carrying out any maintenance tasks original spare parts supplied by the SCM ***(manufacturer) must always be used). The manufacturer is not responsible for damages due to the use of not original parts.***

NOTE-INFORMATION:
the entire machine electrical/electronic system is essential to machine safety. Therefore, the user is not authorised to carry out any repair/substitution of electrical or electronic components, except what is indicated in this manual.

DANGER-WARNING:
the user must also comply with the substitution times for the various safety devices, always using the SCM ***Assistance service to identify the correct spare part and to install it (unless otherwise indicated in this manual).***

SPARE PARTS THAT CAN BE INSTALLED BY THE USER

NOTE-INFORMATION:
in the spare parts catalogue the letter "C" indicates the codes of spare parts which affect operator health and safety.

These spare parts can be installed by expert personnel instructed by the user.

DANGER-WARNING:
for all other spare parts contact the Manufacturer's Dealer SERVICE or contact the Manufacturer's SERVICE directly.

THIS MANUAL IS PROPERTY OF SCM INDUSTRIA S.P.A - ANY TOTAL OR PARTIAL REPRODUCTION IS STRICTLY FORBIDDEN

(vuota_cu_20-02)

20.18 REPLACING THE BELTS

(ev_20-18_0.0)

DANGER-WARNING:
check the belt tension after the first 10 hours of machine operation.
Do not overstretch the belts not to overload the bearings.
Overstretching may overheat and destroy the belts.
When the adjustment has been carried out, again check the stopping time.

20.18.1.ASAW BLADE SPINDLE

(he_20.18.1.a_0.0)

DANGER-WARNING:
before carrying out any of the operations make sure to cut the main electric power and disconnect socket T from plug S.

DANGER-WARNING:
WAIT UNTIL THE SAW BLADES ARE STILL.

DANGER-WARNING:
use proper gloves for handling the tools.

Remove the motor panel (A fig. 20.18-1A) to access the belts and proceed as described below:

- Lower the saw blade as far as it will go.
- Push the tensioning rod (B fig. 20.18-1-A) down and extract the belts.
- Fit new belts.
- Close the door (A fig. 20.18-1-A).

NOTE-INFORMATION:
if only one belt is wear, you have to replace all belts.
Correct belt tension is guaranteed by the belt tensioning unit (B fig. 20.18-1-A) and there is no need for adjustments.

FORBIDDEN:
- never couple belts of different make;
- never use a new belt and an old one, because in that case the new belt tramsmits the entire power by itself and so it is damaged in short time.

THIS MANUAL IS PROPERTY OF SCM INDUSTRIA S.P.A - ANY TOTAL OR PARTIAL REPRODUCTION IS STRICTLY FORBIDDEN

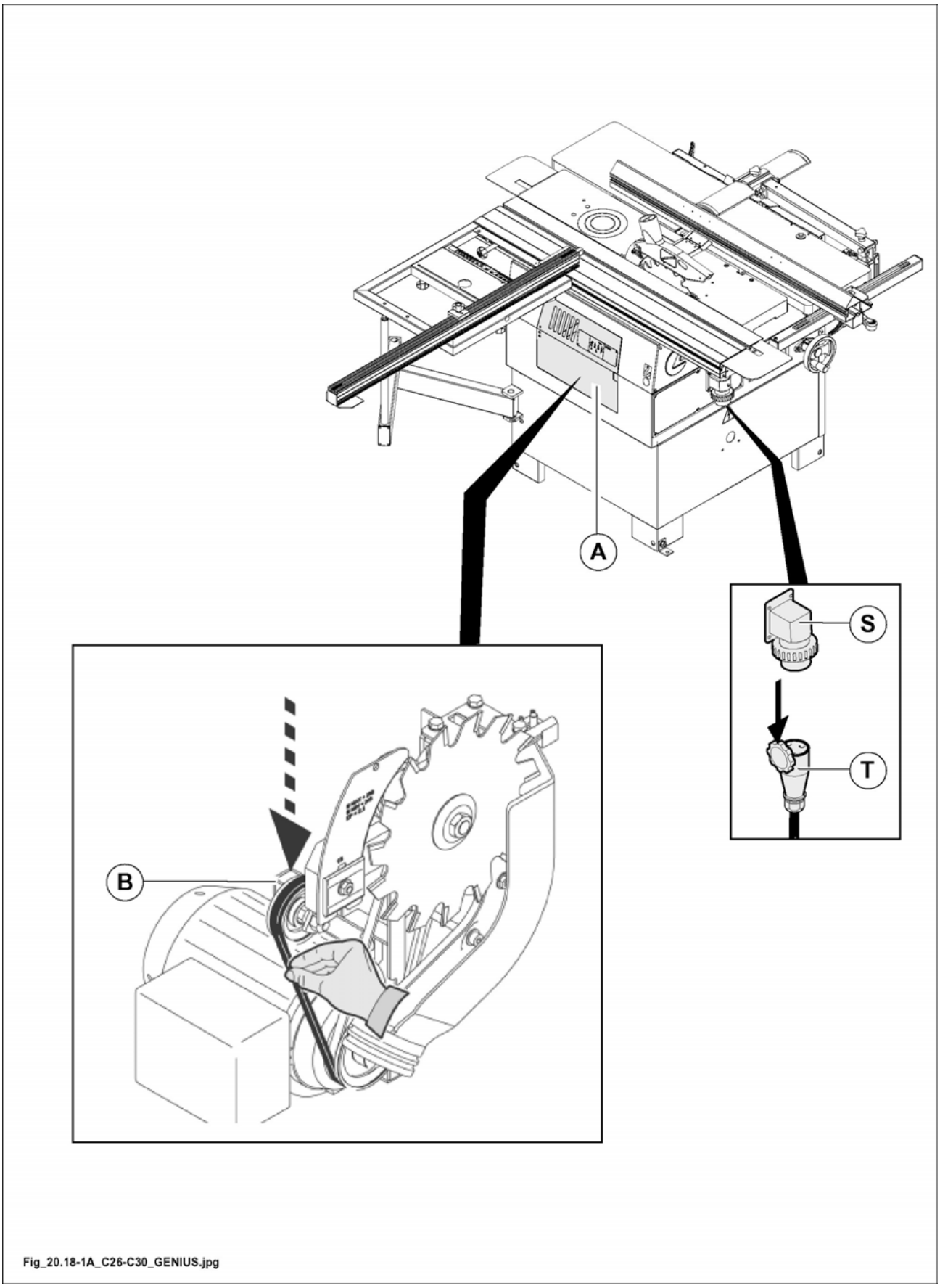

Fig. 20.18-1-A

20.18.3 MOULDER

(cu_20-18-3_0.0)

DANGER-WARNING:
all adjusting operations are to be carried out with standstill spindle.

DANGER-WARNING:
before carrying out any of the operations make sure to cut the main electric power and disconnect socket (T fig. 20.18.3) from plug (S fig. 20.18.3).

DANGER-WARNING:
use proper gloves for handling the tools.

- Open the door (V fig. 20.18.3) (activates a microswitch which prevents the motor from starting).
- Loosen the handle (A fig. 20.18.3).
- Push the motor. The belt (C fig. 20.18.3) is now slackened and can be substituted.
- Insert belt into pulley sheaves on the basis of the speed required, referring to the plate (B fig. 20.18.3).
- Operate the motor, moving the two pulleys away and tightening the handle (A fig. 20.18.3).

CAUTION:
an excessive belt tightening will cause both functioning failures and belts wear beforehand.

- Close the door (V fig. 20.18.3).

DANGER-WARNING:
before starting the machine make sure that the rotation speed you have selected is proper for the working, the wood type and for the tool used on the machine.

 THIS MANUAL IS PROPERTY OF SCM INDUSTRIA S.P.A - ANY TOTAL OR PARTIAL REPRODUCTION IS STRICTLY FORBIDDEN

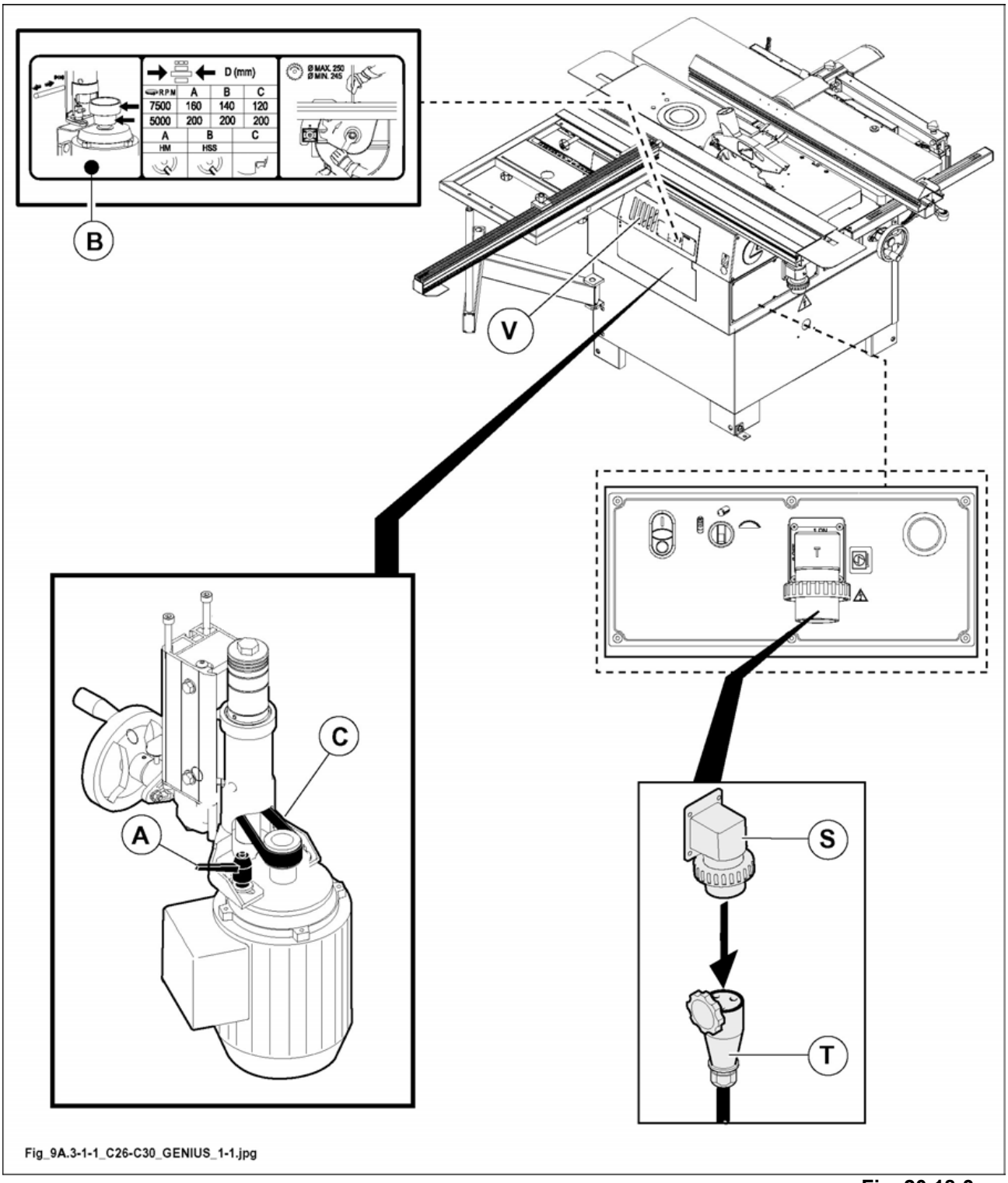
D (mm)
R.P.M
A
B
C
7500
160
140
120
5000
200
200
200
A
B
C
HM
HSS
Ø MAX. 250
Ø MIN. 245
B
V
C
A
S
T
Fig_9A.3-1-1_C26-C30_GENIUS_1-1.jpg

Fig. 20.18-3

20.18.4 BELTS REPLACING

(fs_20-18_0.0)

DANGER-WARNING:
all adjusting operations are to be carried out with standstill spindle.

DANGER-WARNING:
before carrying out any of the operations make sure to cut the main electric power and disconnect socket (T fig. 20.18-4) from plug (S fig. 20.18-4).

DANGER-WARNING:
use proper gloves for handling the tools.

- Raise the thicknesser table using the handwheel (M fig. 20.18.4).
- Open the door (V fig. 20.18.4).
- Slacken the 4 retaining nuts (A fig. 20.18.-4) of the motor support.
- Slacken nut (C fig. 20.18-4).
  Slacken adjustment screw (B fig. 20.18-4) to slacken belt tension.
- Pull pulley (D fig. 20.18-4) out of the cutter block after removing the two grub screws (E fig. 20.18-4).
- Remove the belt
- Insert the new belt (F fig. 20.18-4) into groove of pulley (D fig. 20.18-4).
- Insert pulley (D fig. 20.18-4) into the cutter block and fix it by tightening the two grub screws (E fig. 20.18-4). Ensure that the grub screws are screwed tightly into their respective housings.
- Tighten the belts following the istructions mentioned in Par. 20.23.
- When the adjustment has been made, tighten nuts (A fig. 20.18-4) and (C fig. 20.18-4).

CAUTION:
an excessive belt tightening will cause both functioning failures and belts wear beforehand.

- Close the door (V fig. 20.18.4).

THIS MANUAL IS PROPERTY OF SCM INDUSTRIA S.P.A - ANY TOTAL OR PARTIAL REPRODUCTION IS STRICTLY FORBIDDEN

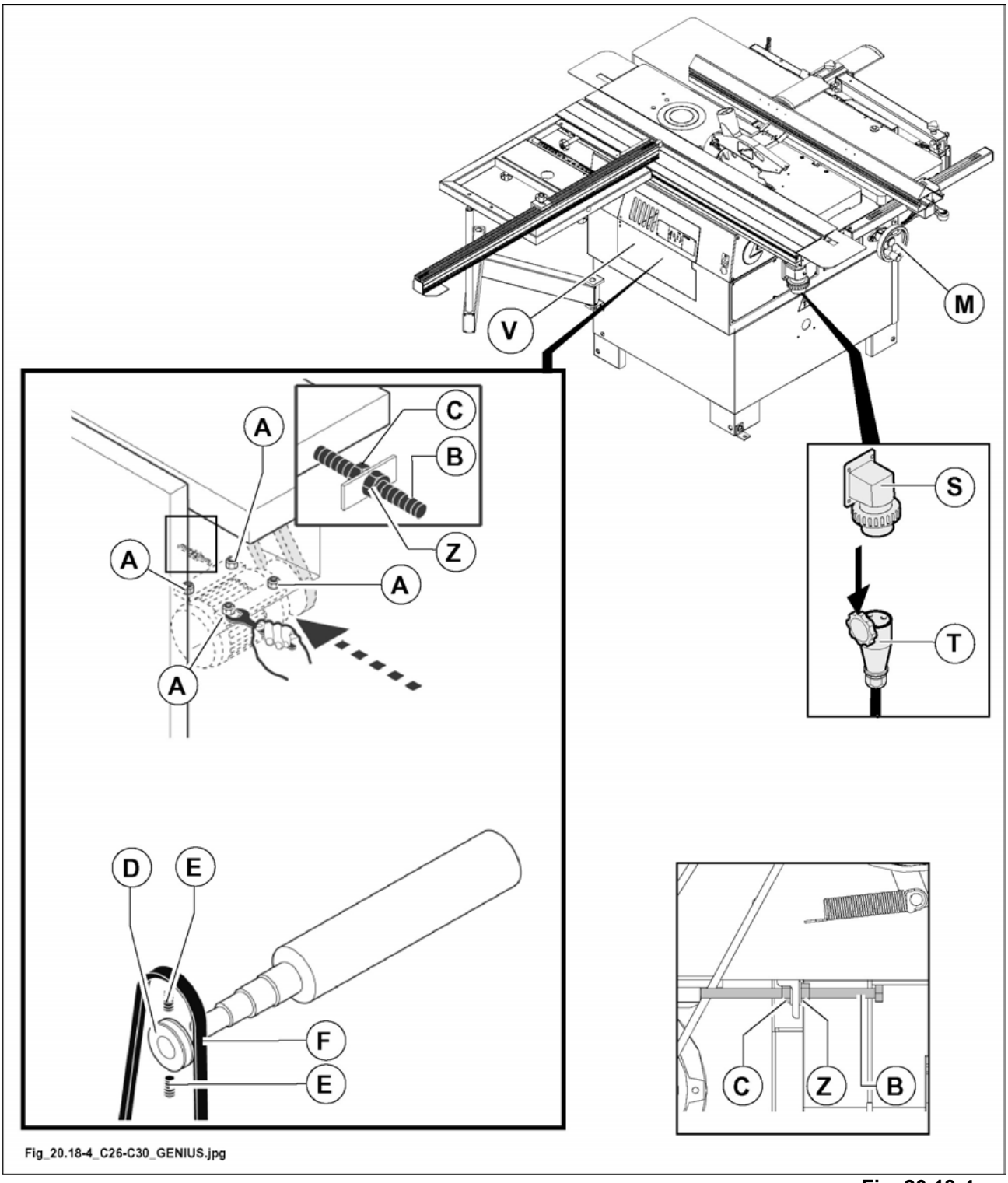

Fig. 20.18-4

20.23 BELT STRETCHING

(ev_20-23_0.0)

DANGER-WARNING:
check the belt tension after the first 10 hours of machine operation.
Do not overstretch the belts not to overload the bearings.
Overstretching may overheat and destroy the belts.
When the adjustment has been carried out, again check the stopping time.

20.23.1.ASAW BLADE SPINDLE

(he_20.23.1a)

NOTE-INFORMATION:
correct belt tension is guaranteed by the belt tensioning unit (B fig. 20.23-1-A) and there is no need for adjustments.

DANGER-WARNING:
use proper gloves for handling the tools.

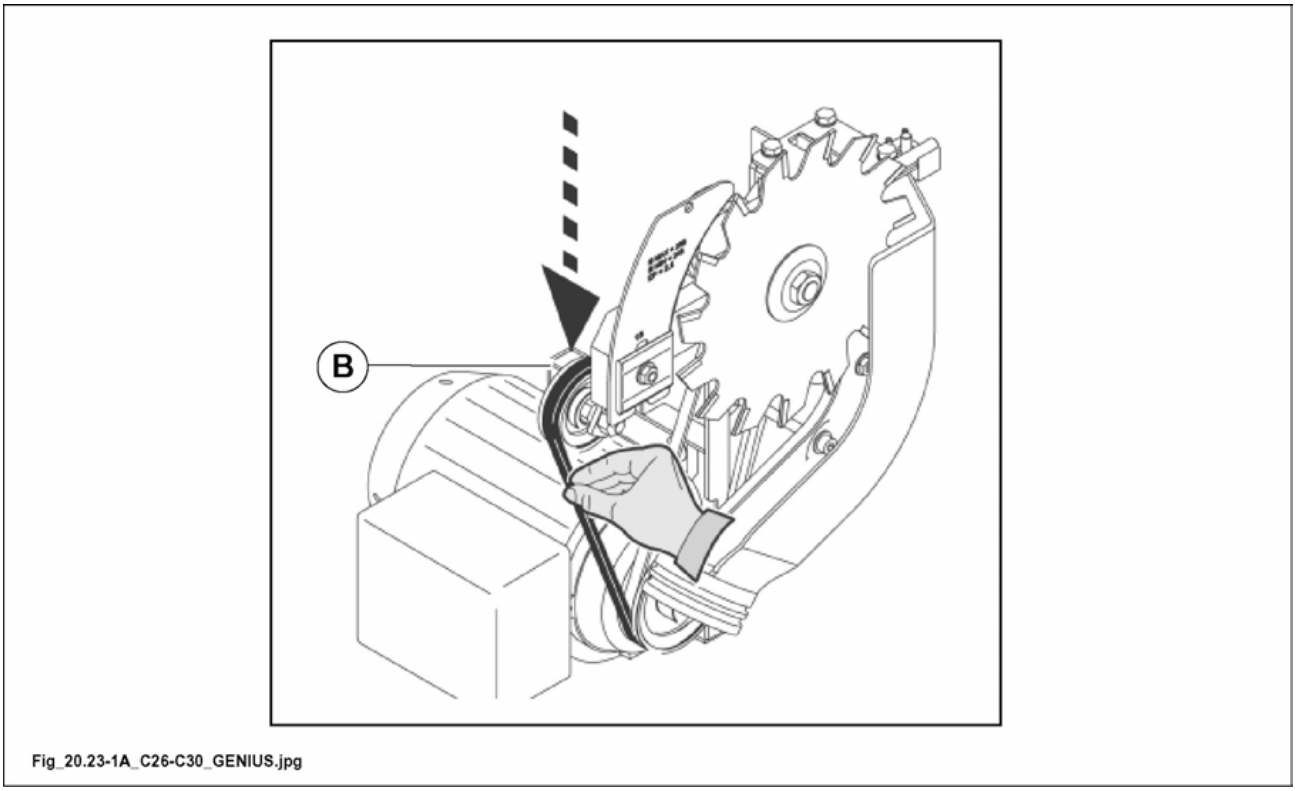

Fig. 20.23-1-A

 THIS MANUAL IS PROPERTY OF SCM INDUSTRIA S.P.A - ANY TOTAL OR PARTIAL REPRODUCTION IS STRICTLY FORBIDDEN

(st-10)

20.23.3 MOULDER

(cu_20-23-3_0.0)

DANGER-WARNING:
all adjusting operations are to be carried out with standstill spindle.

DANGER-WARNING:
before carrying out any of the operations make sure to cut the main electric power and disconnect socket (T fig. 20.23.3) from plug (S fig. 20.23.3).

DANGER-WARNING:
use proper gloves for handling the tools.

- Open the door (V fig. 20.23.3) (activates a microswitch which prevents the motor from starting).
- Loosen the handle (A fig. 20.23.3) and act on the motor to stretch the belt (C fig. 20.23.3).
- Tighten the handle (A fig. 20.23.3) at completion of the adjustment.

- Close the door (V fig. 20.23.3).

Periodically every week check the belt tension.

CAUTION:
an excessive belt tightening will cause both functioning failures and belts wear beforehand.

DANGER-WARNING:
before starting the machine make sure that you have selected the speed of rotation proper for the working to be carried out, for the wood type and for the tool used on the machine.

 THIS MANUAL IS PROPERTY OF SCM INDUSTRIA S.P.A - ANY TOTAL OR PARTIAL REPRODUCTION IS STRICTLY FORBIDDEN

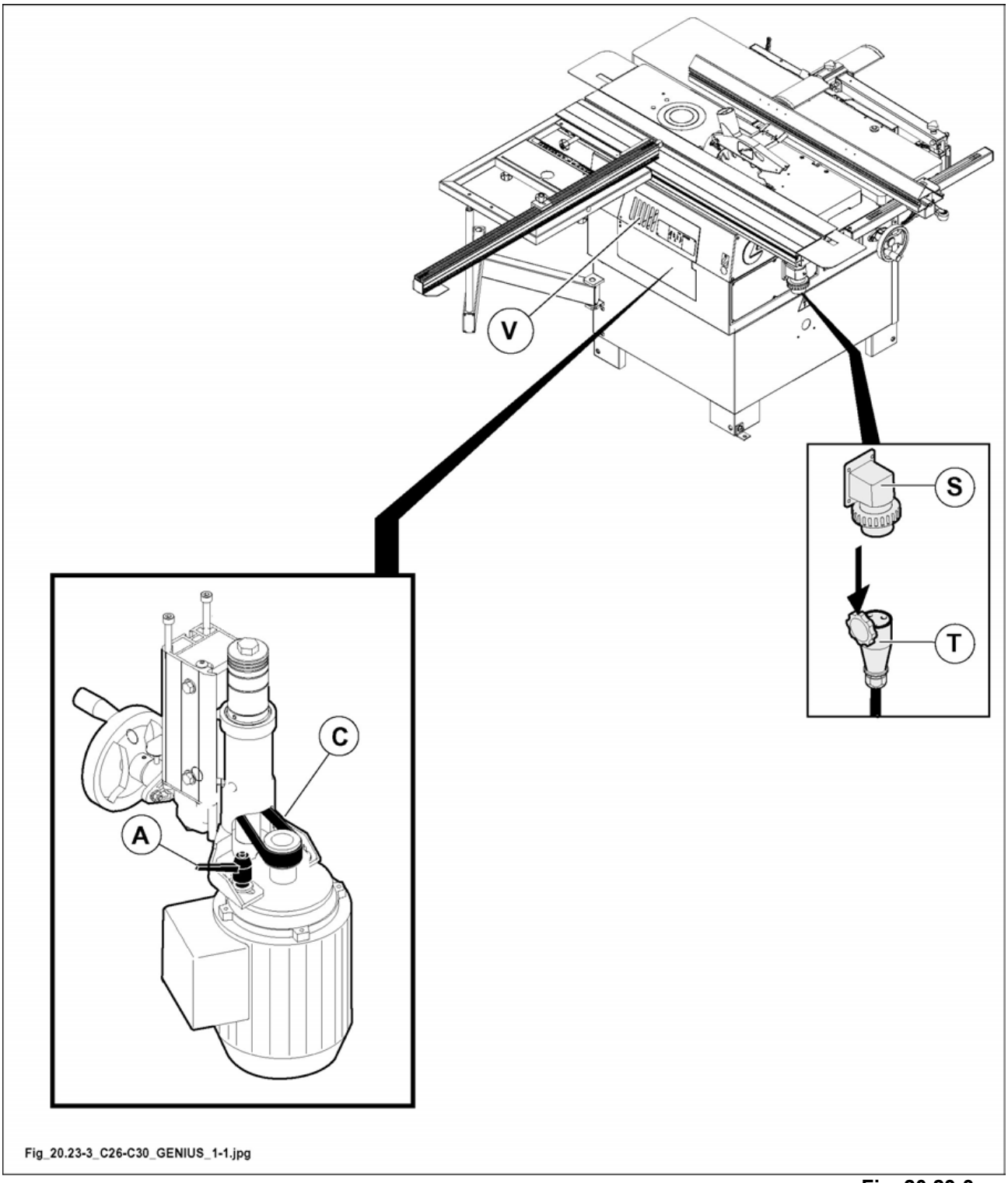

Fig. 20.23-3

20.23.4 BELT TENSION ADJUSTING

(fs_20-28_0.0)

DANGER-WARNING:
all adjusting operations are to be carried out with standstill spindle.

DANGER-WARNING:
before carrying out any of the operations make sure to cut the main electric power and disconnect socket (T fig. 20.23-4) from plug (S fig. 20.23-4).

DANGER-WARNING:
use proper gloves for handling the tools.

DANGER-WARNING
after the first working days or after many working hours the belts get slack; the time required for saw blade stop gets longer.

NOTE-INFORMATION:
every week check the cutterblock belts.

To stretch the belts proceed as follows.
- Raise the thicknesser table using the handwheel (M fig. 20.23-4).
- Open the door (V fig. 20.23-4).
- Slacken the 4 retaining nuts (A fig. 20.23-4) of the motor support.
- Slacken nut (C fig. 20.23-4).
- Tighten the belt screwing down the screw (B fig. 20.23-4).
- When the adjustment has been made, tighten nuts (A fig. 20.23-4) and (C fig. 20.23-4).
- Close the door (V fig. 20.23-4).

CAUTION:
an excessive belt tightening will cause both functioning failures and belts wear beforehand. By exerting a force P in the middle of a belt, the latter must have a yielding f as shown in the table.

Force P		Yielding f (mm)
N	Kp	
24 ÷ 26	2,4 ÷ 2,6	9 ÷ 10

 THIS MANUAL IS PROPERTY OF SCM INDUSTRIA S.P.A - ANY TOTAL OR PARTIAL REPRODUCTION IS STRICTLY FORBIDDEN

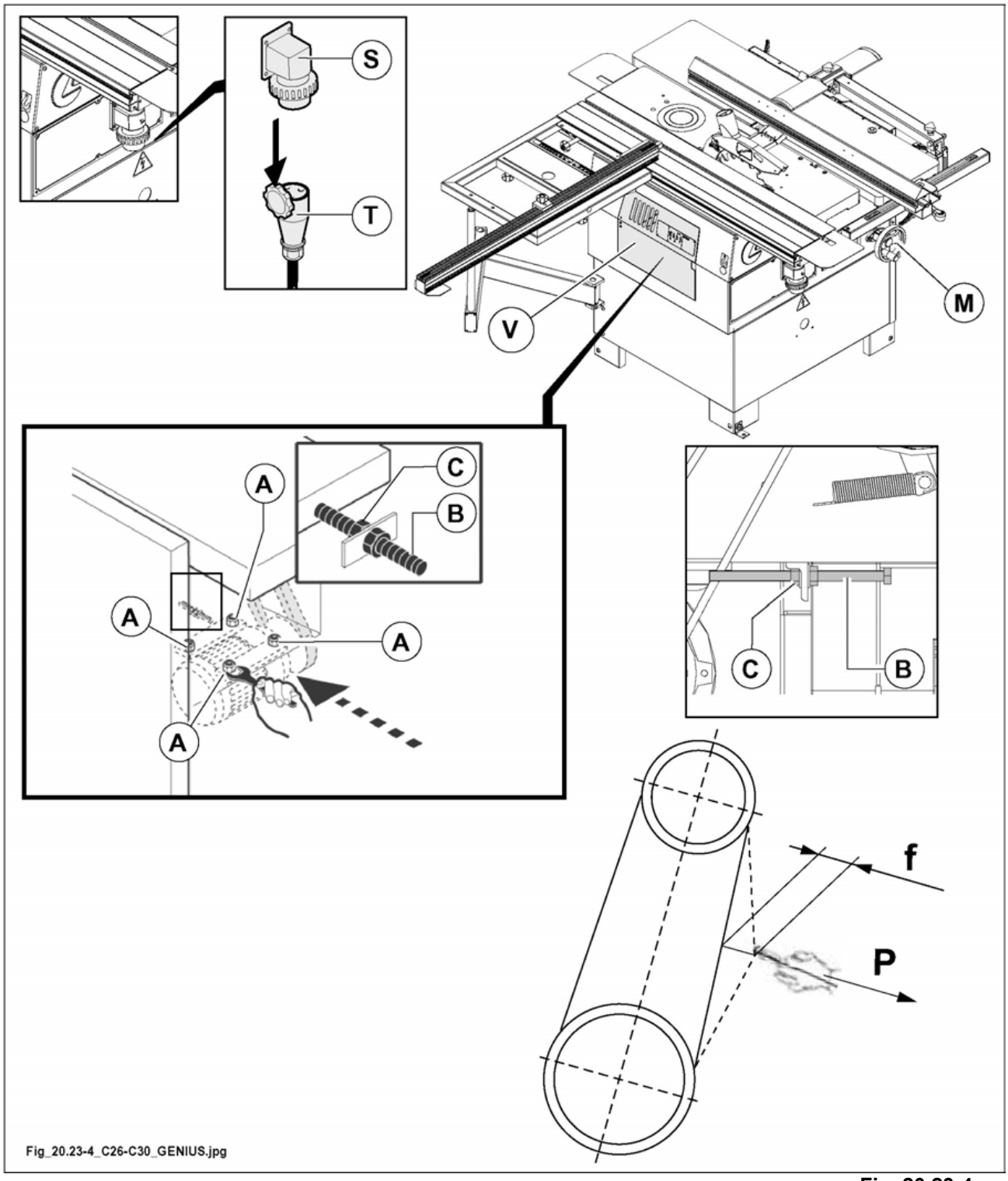

Fig. 20.23-4

20.28 MAKING THE PARTS WHICH GET WORN

(ev_20-28_0.0)

20.28.1 REPLACING THE CHIP BREAKER

(ev_20-28-1_0.0)

Rule for 90°-cuts

If you have to replace wood part (M fig. 20.28-1), request it:

- to SCM dealer;
- or to SCM Spare Parts Department,

or make it by using beech; figure 20.28-1 indicates the measures.

To replace the worn splinter guard, use the screws (X fig. 20.28.1).
Reassemble the new splinter guard and tighten the screws (X).

NOTE-INFORMATION:
for the adjustments see sect. 7.1.3.

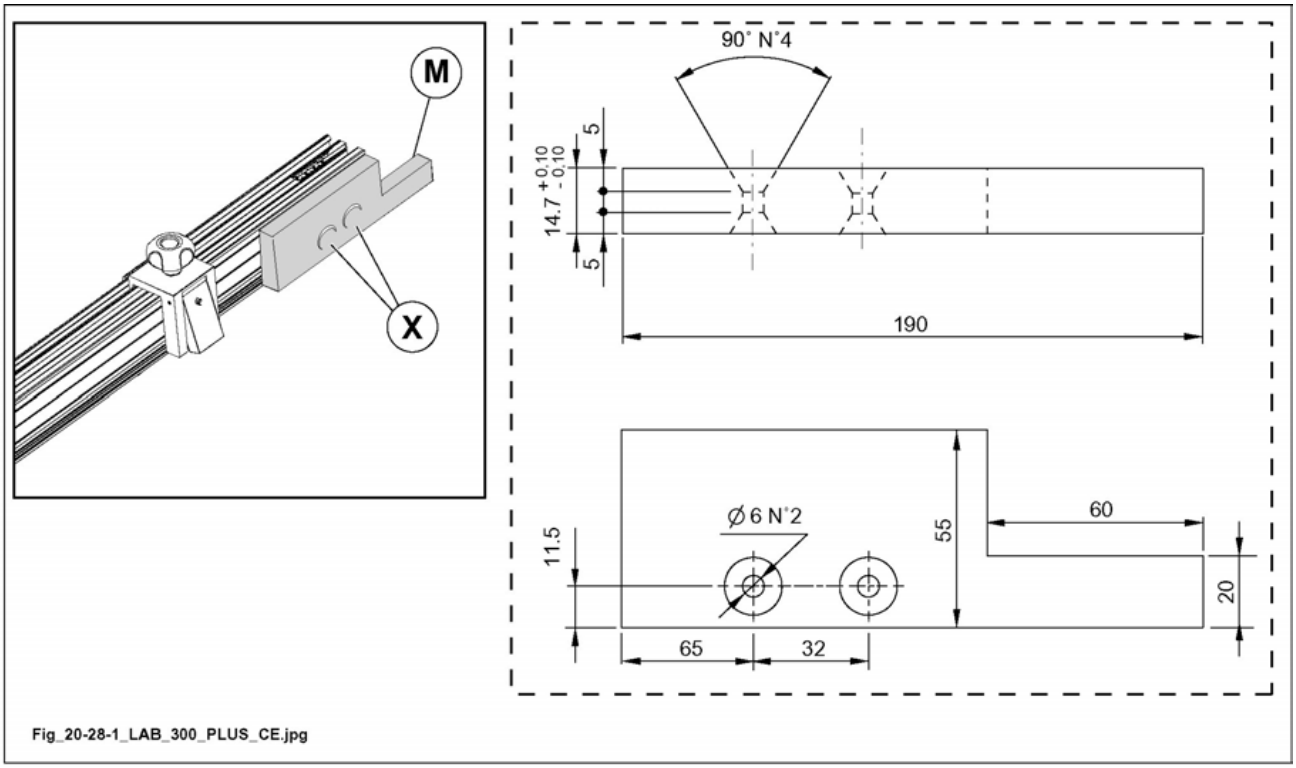

Fig. 20.28-1

 THIS MANUAL IS PROPERTY OF SCM INDUSTRIA S.P.A - ANY TOTAL OR PARTIAL REPRODUCTION IS STRICTLY FORBIDDEN

20.37 TROUBLES - CAUSES - WHAT TO DO

(ev_20-37_0.0)

This section indicates how to solve problems which may rise during the machine use.

Carry out interventions only after carefully reading all that concerns the problem indicated in this handbook.

For problems not described in the handbook apply to SCM Technical Service.

PROBLEM	CAUSE	REMEDY
The machine does not start		
	No electrical energy on one or more phases of the line.	Check with a tester there is voltage in the three phases.
	The fuses of the auxiliary circuit are interrupted or the fuse block cover is open.	Close the fuse block cover (located inside electric cabinet). If the machine does not start: 1- Open the fuse block cover. 2- Check the integrity of fuse, if necessary, replace them.
	Emergency on.	Switch off the button by turning it.
	Guards not in right position.	Check that the guards are in right position: - planer: all tables closed and tipper open. - thicknesser: tipper closed. - (**S** fig. 20.37A) the blade and spindle access guard door is closed.
	Overload switch (**A** fig. 20.37A) triggered because of: - an excessive absorption of current due to improper machine use (task too heavy for power of machine) - insufficient cable size for power of machine (see electrical connection references in chap. 4) - voltage failure due to excessive power supply cable length - short circuit in electrical system.	Solve the problem, wait for the overload switch to cool down and restart the machine.
The machine stops during machining.		
	No electrical energy on one or more phases of the line.	Check with a tester there is voltage in the three phases.
	The fuses of the auxiliary circuit are interrupted or the fuse block cover is open.	Close the fuse block cover (located inside electric cabinet). If the machine does not start: 1- Open the fuse block cover. 2- Check the integrity of fuse, if necessary, replace them.
	Too heavy operation in relation to the power of the motor.	Wait for the cooling of the thermal cut out protection. Reactivate it after a few minutes.
	The motor belt is loose or ruined.	Tighten the belts or change them as described in sections 20.18 and 20.23.

MOULDER

PROBLEMS	CAUSE	REMEDY

PROBLEMS	CAUSE	REMEDY
The motor turns but the tool stops when it comes into contact with the workpiece.		
	The motor belt is loose or ruined.	Tighten the belt or change as described in sections 20.18 and 20.23.
When pressing the start button the motor doesn't start.		
	Electronic brake blocked	Disconnect the power supply to the machine to rest the function. If the problem remains, contact your Dealer SCM
The spindle does not move vertically and does not incline.		
	The lifting screws are jammed with dust and resin.	Clean carefully (see Chapter 20).

SAW

PROBLEM	CAUSE	REMEDY
The motor rotates but the saw blade stops when it is in contact with the piece.	The motor belt is loose or ruined.	Tighten the belt or change as described in sections 20.18 and 20.23.
The panel slides with difficulty during cuting (it is tight betwen the fence and the blade) or is not cut with sides paralel.	La guida per tagli paralleli si è sregolata (deve essere parallela alla lama con una leggera apertura di uscita di 0,10mm).	Contact our Service Centre (phone number in chap.1).
The rule does not position correctly at 90°.	The **C** stops on the rule are not adjusted correctly.	Adjust screw **G** and adjust the stops until the rule is positioned correctly at 90° (fig. 20.37A).

 THIS MANUAL IS PROPERTY OF SCM INDUSTRIA S.P.A - ANY TOTAL OR PARTIAL REPRODUCTION IS STRICTLY FORBIDDEN

SURFACE PLANING AND THICKNESSING MACHINE

PROBLEM	CAUSE	REMEDY
The thicknesser table does not lift or lower.		
	The lifting screw is jammed with dust and resin.	Clean carefully (see Chapter 20).
The wood is not fed.		
	Roller pressure too low.	Contact our Service Centre (phone number in chap.1).
	The thicknesser table is adjusted to a measurement greater than the thickness of the wood.	Move the table to the right height (see section 9.5).
	The chain is broken	To replace it call your Dealer's Technical Assistance Office [manufacturer].
The tables do not close		
	Tipper closed.	Open cutter block safety tipper completely.
The motor operates but the spindle stops when it is in contact with the workpiece.		
	The motor belt is loose or ruined.	Tighten the belt or change as described in sections 20.18 and 20.23.

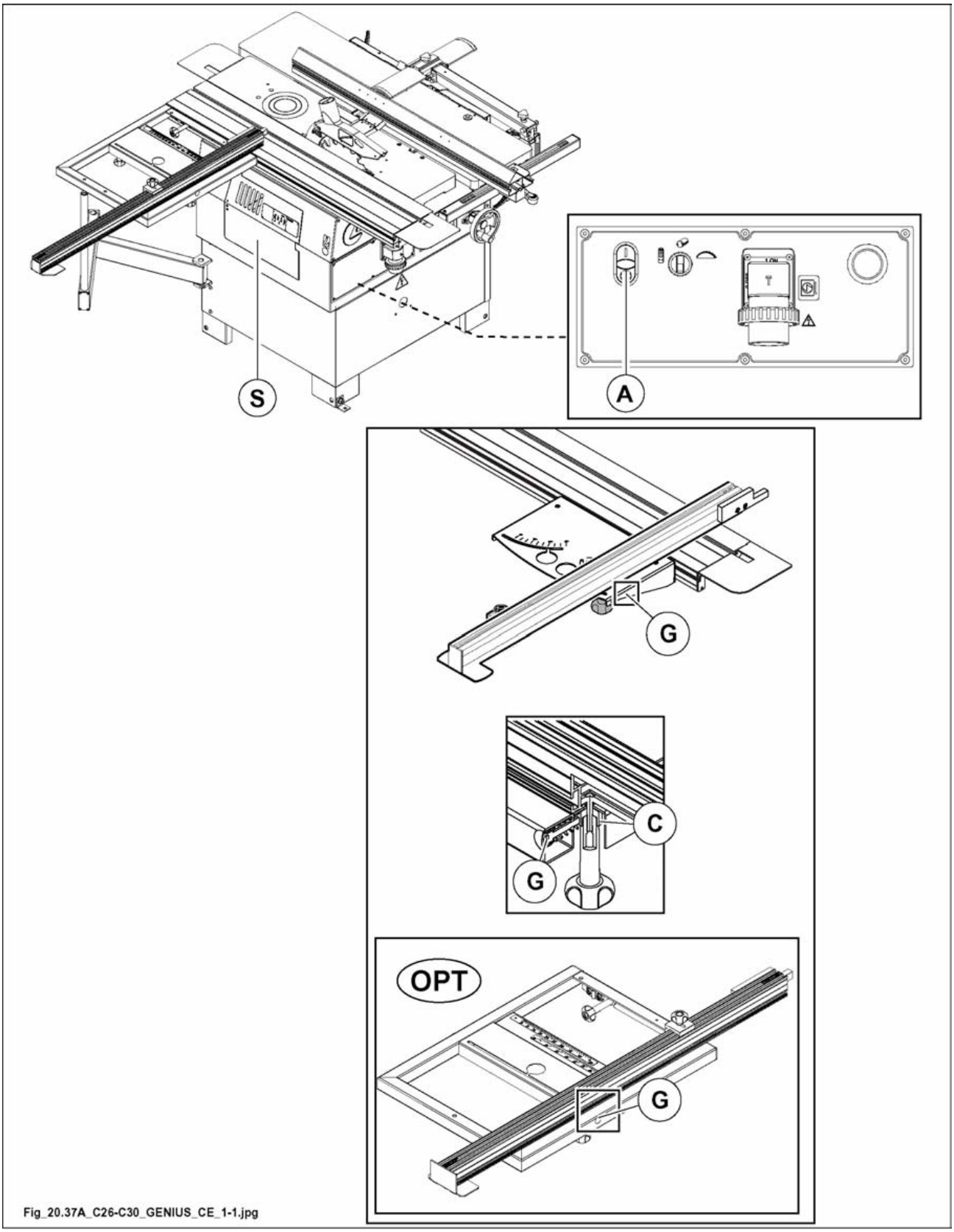

Fig. 20.37A

 THIS MANUAL IS PROPERTY OF SCM INDUSTRIA S.P.A - ANY TOTAL OR PARTIAL REPRODUCTION IS STRICTLY FORBIDDEN

20.60 UNSCHEDULED MAINTENANCE

(mmax_20-60-0.0)

All tasks not expressly listed in this manual, such as:

- tasks to be carried out following component or electric motor faults
- tasks to be carried out following mechanical system component faults

shall be considered unscheduled maintenance tasks.

These tasks require specific skills and must only be carried out by qualified personnel authorised by the machine manufacturer.

DANGER-WARNING:
never attempt to carry out makeshift repairs or replacements; this could result in dangers of a serious nature for exposed personnel and the machine itself.